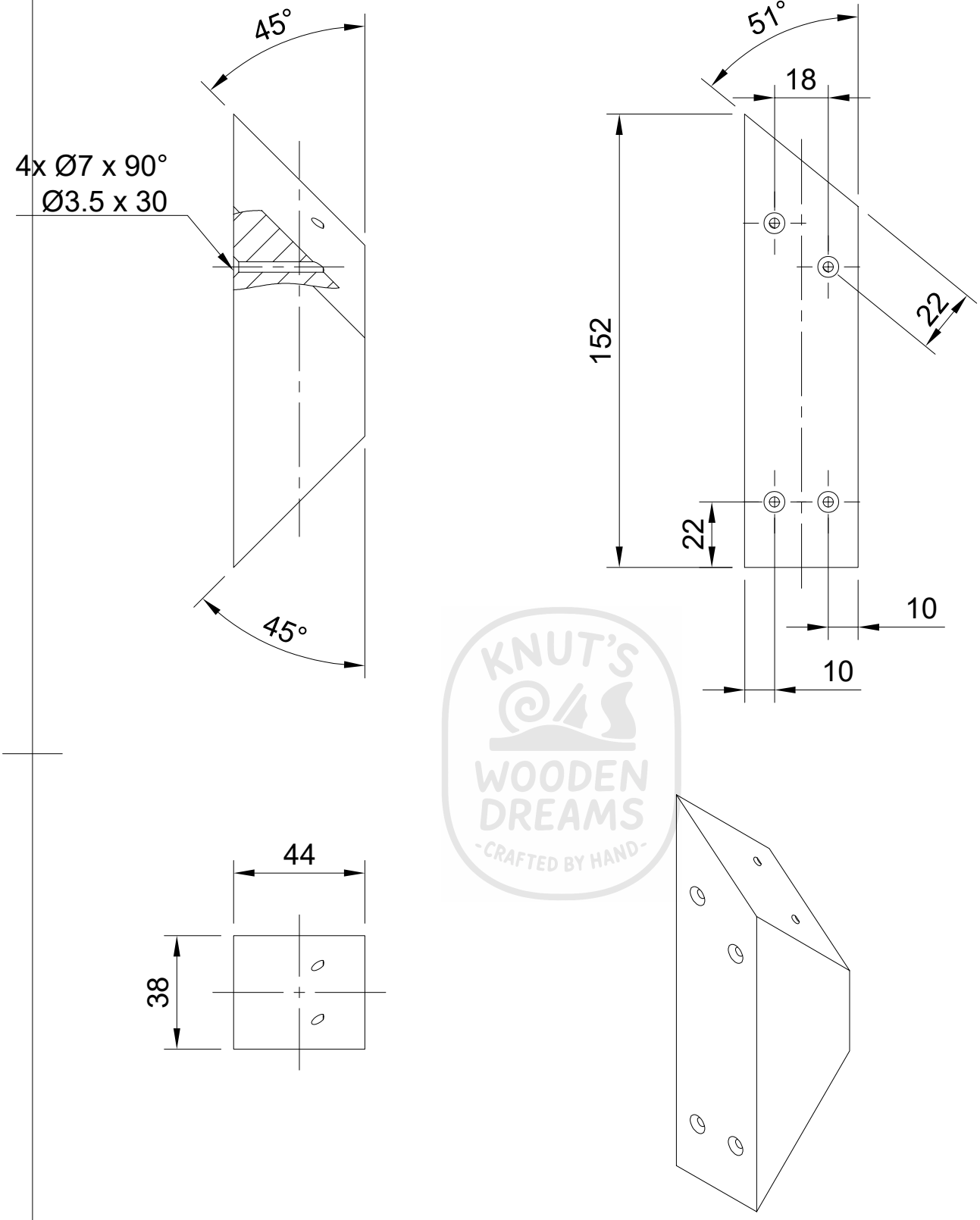

KNUT'S WOODEN DREAMS -CRAFTED BY HAND-

Dept.	Technical reference	Created by Knut Welzel 15.03.2025	Approved by	
Kiefer: 152x44x44 Masse: 0.43 kg 1 Stück		Document type	Document status	
		Title **Winkel Strebe rechts**	DWG No.	
			Rev. / Date of issue	Sheet 19