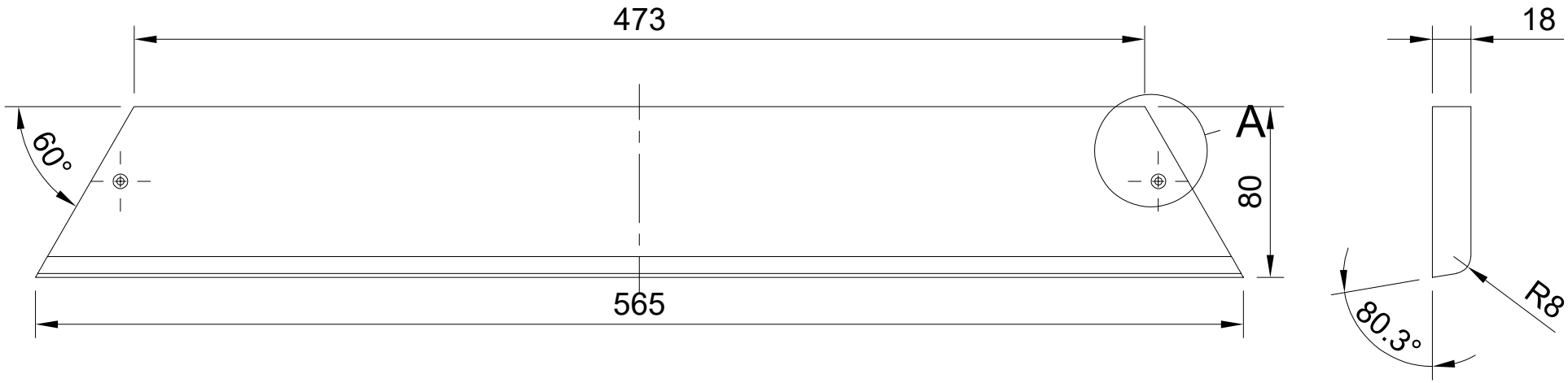

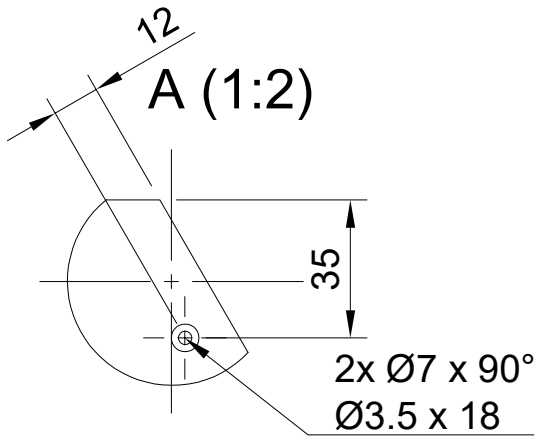

KNUT'S WOODEN DREAMS -CRAFTED BY HAND-

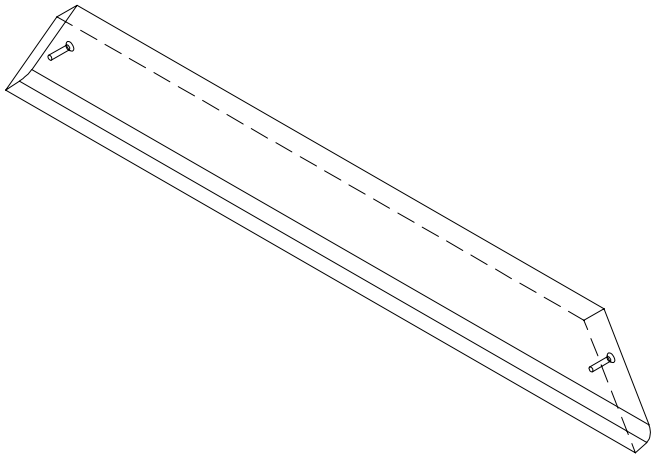

Dept.	Technical reference	Created by Knut Welzel 08.01.2025	Approved by
Kiefer: 566x80x18 Masse: 0.41 kg 1 Stück		Document type	Document status
		Title Deckleiste	DWG No.
			Rev. / Date of issue / Sheet 20