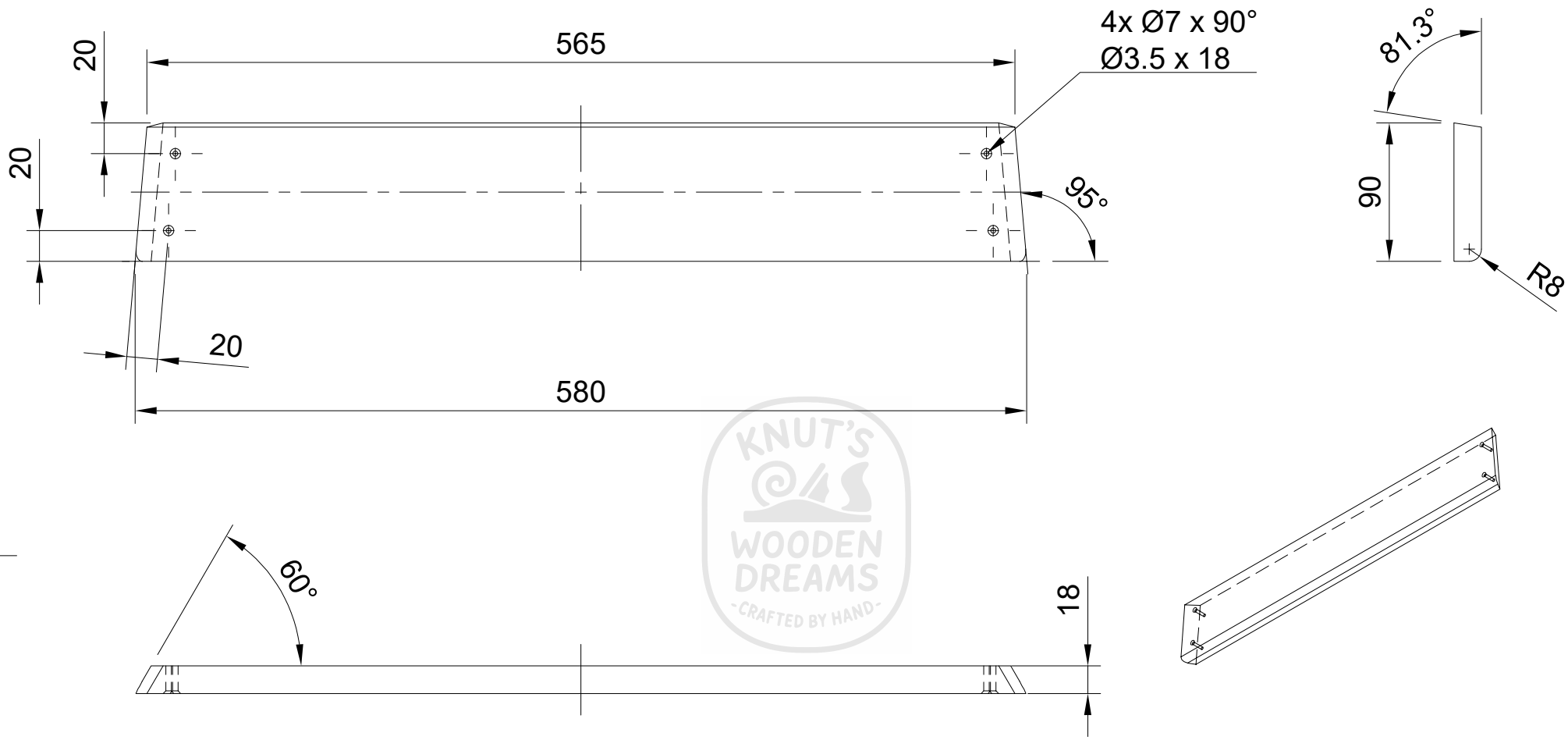


KNUT'S WOODEN DREAMS -CRAFTED BY HAND-

| | | | |
|---|---|---|---|
| Dept. | Technical reference | Created by<br>Knut Welzel 14.01.2025 | Approved by |
| Kiefer: 581x90x18<br>Masse: 0.51 kg<br><br>1 Stück | | Document type | Document status |
| | | Title<br>Brett Lehne 1 | DWG No. |
| | | | Rev. / Date of issue / Sheet 23 |