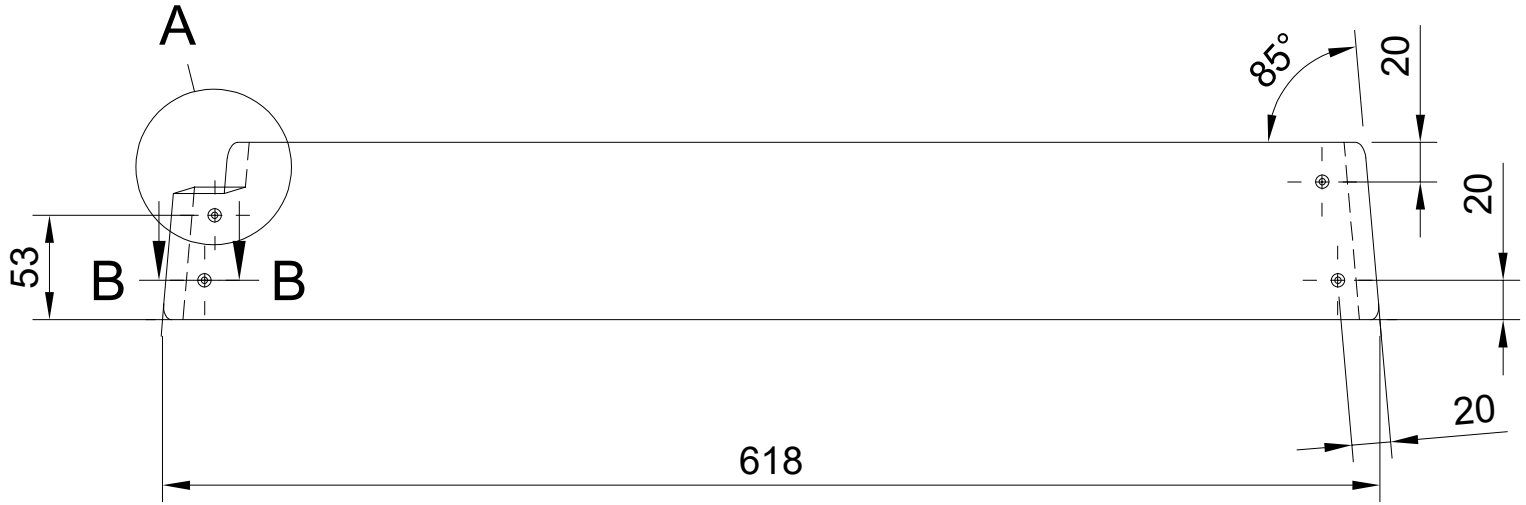

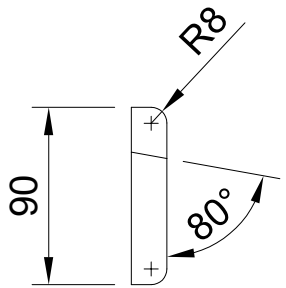

A (1:2)

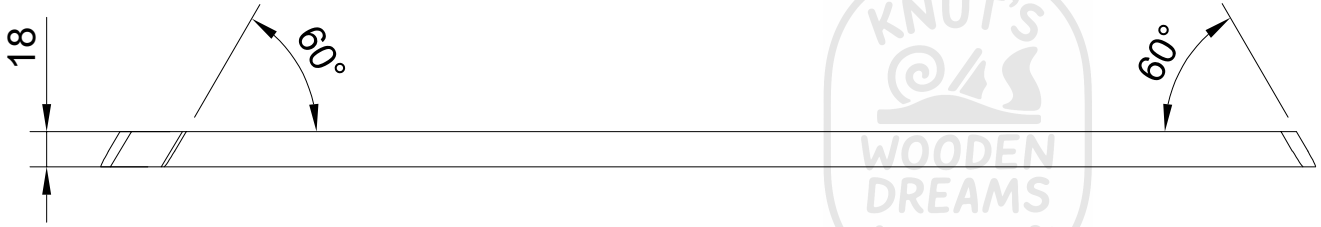

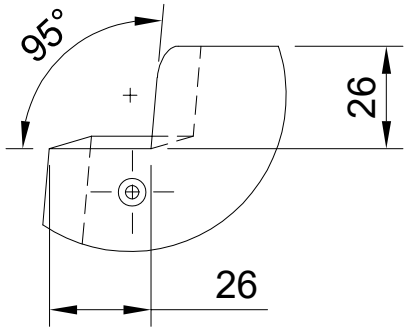

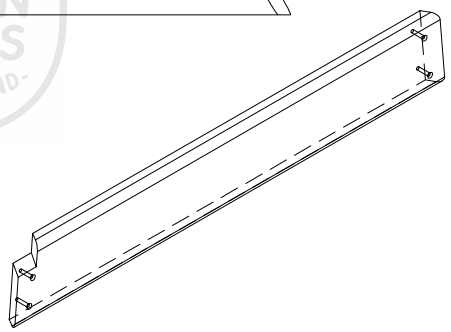

B-B (1:1)

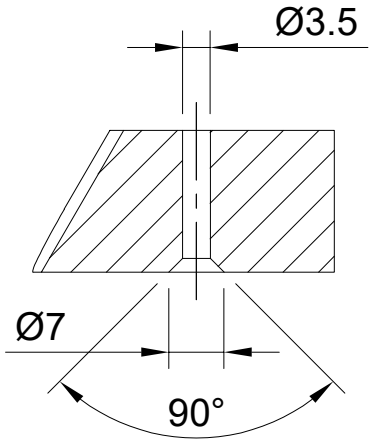

KNUT'S WOODEN DREAMS -CRAFTED BY HAND-

Dept.	Technical reference	Created by Knut Welzel 02.03.2025	Approved by
Kiefer: 618x90x18 Masse: 537.754 g 1 Stück		Document type	Document status
		Title Brett Lehne 3 links	DWG No.
			Rev. / Date of issue / Sheet 29