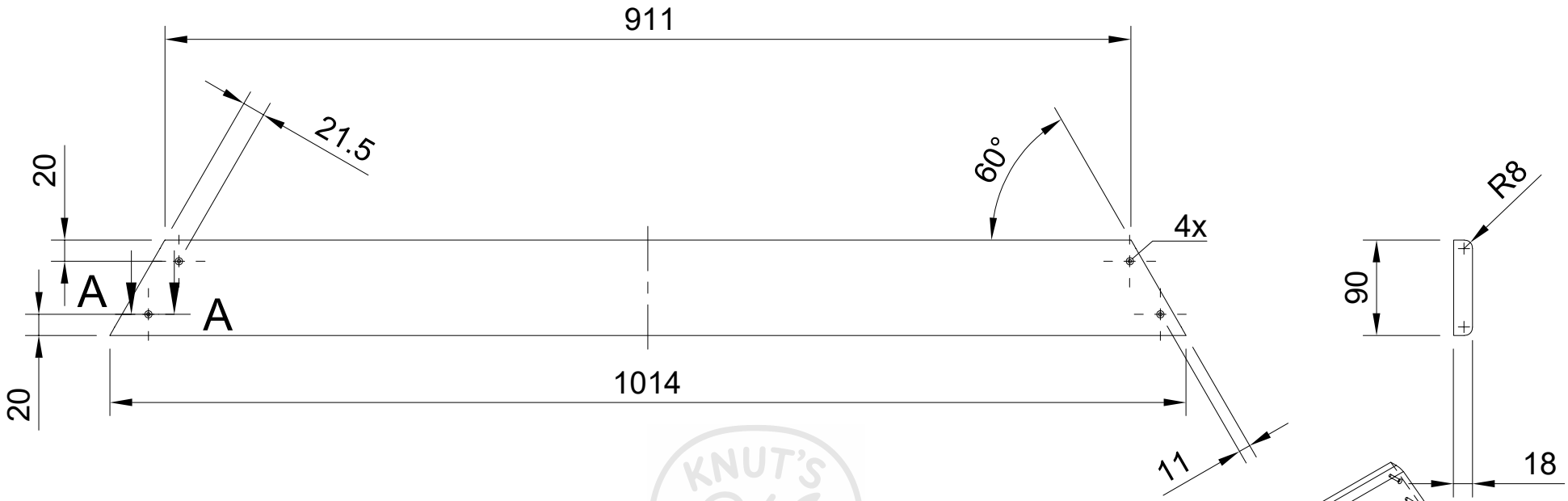

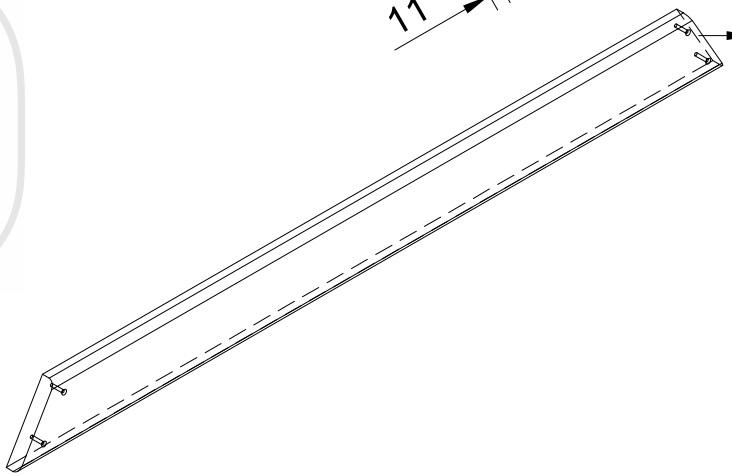

A-A (1:1)

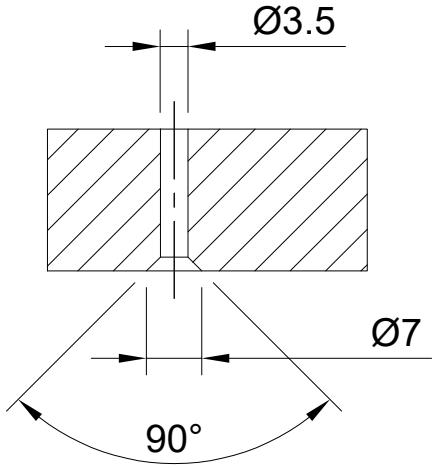

KNUT'S WOODEN DREAMS -CRAFTED BY HAND-

Dept.	Technical reference	Created by Knut Welzel 02.03.2025	Approved by
Kiefer: 1014x90x18 Masse: 0.87 kg 1 Stück		Document type	Document status
		Title Brett Sitz 3 links	DWG No.
			Rev. / Date of issue / Sheet 37