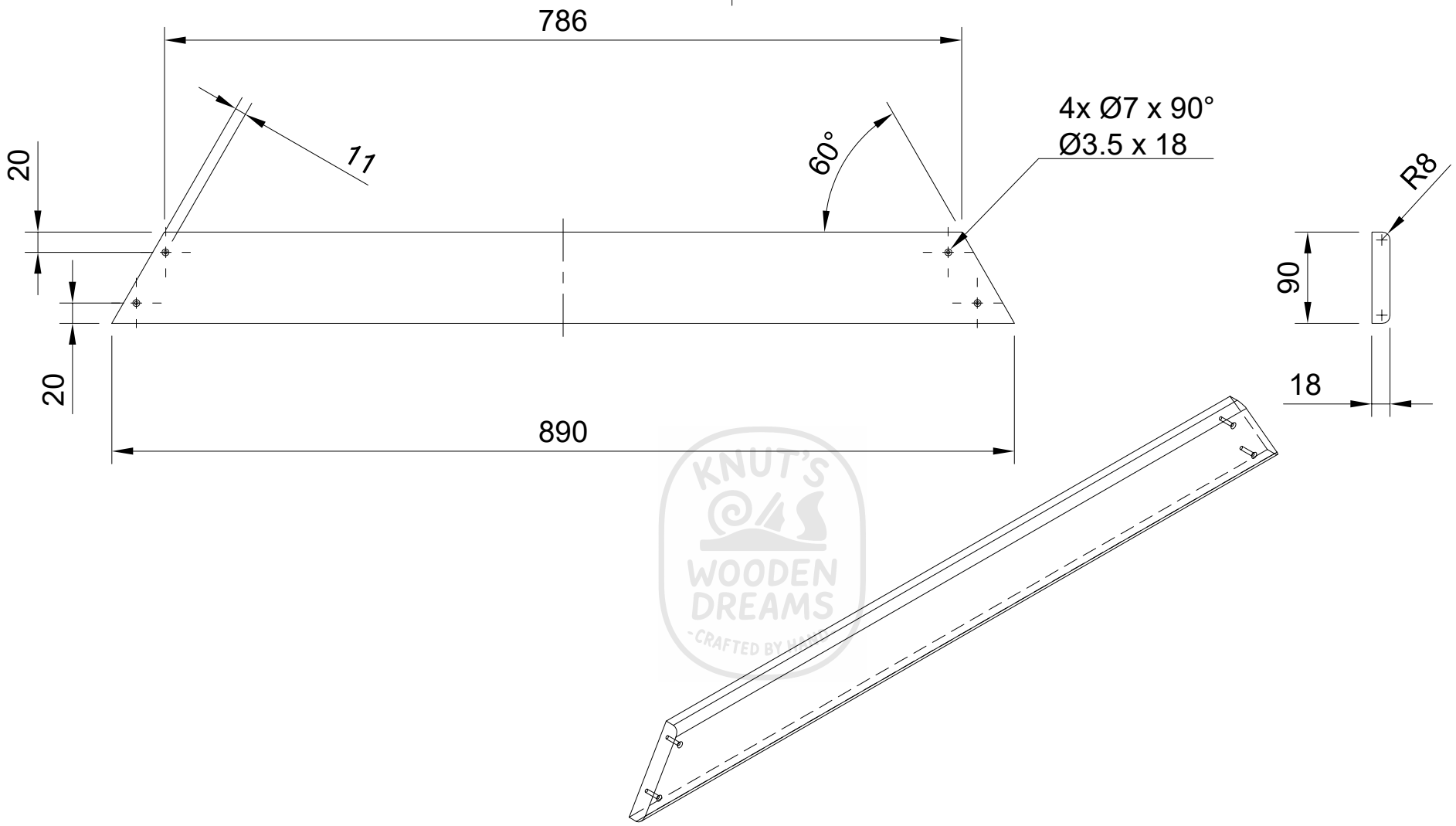

Dept.	Technical reference	Created by Knut Welzel 02.03.2025	Approved by
Kiefer: 890x90x18 Masse: 760.362 g 1 Stück		Document type	Document status
		Title Brett Sitz 2 rechts	DWG No.
			Rev. / Date of issue / Sheet 44