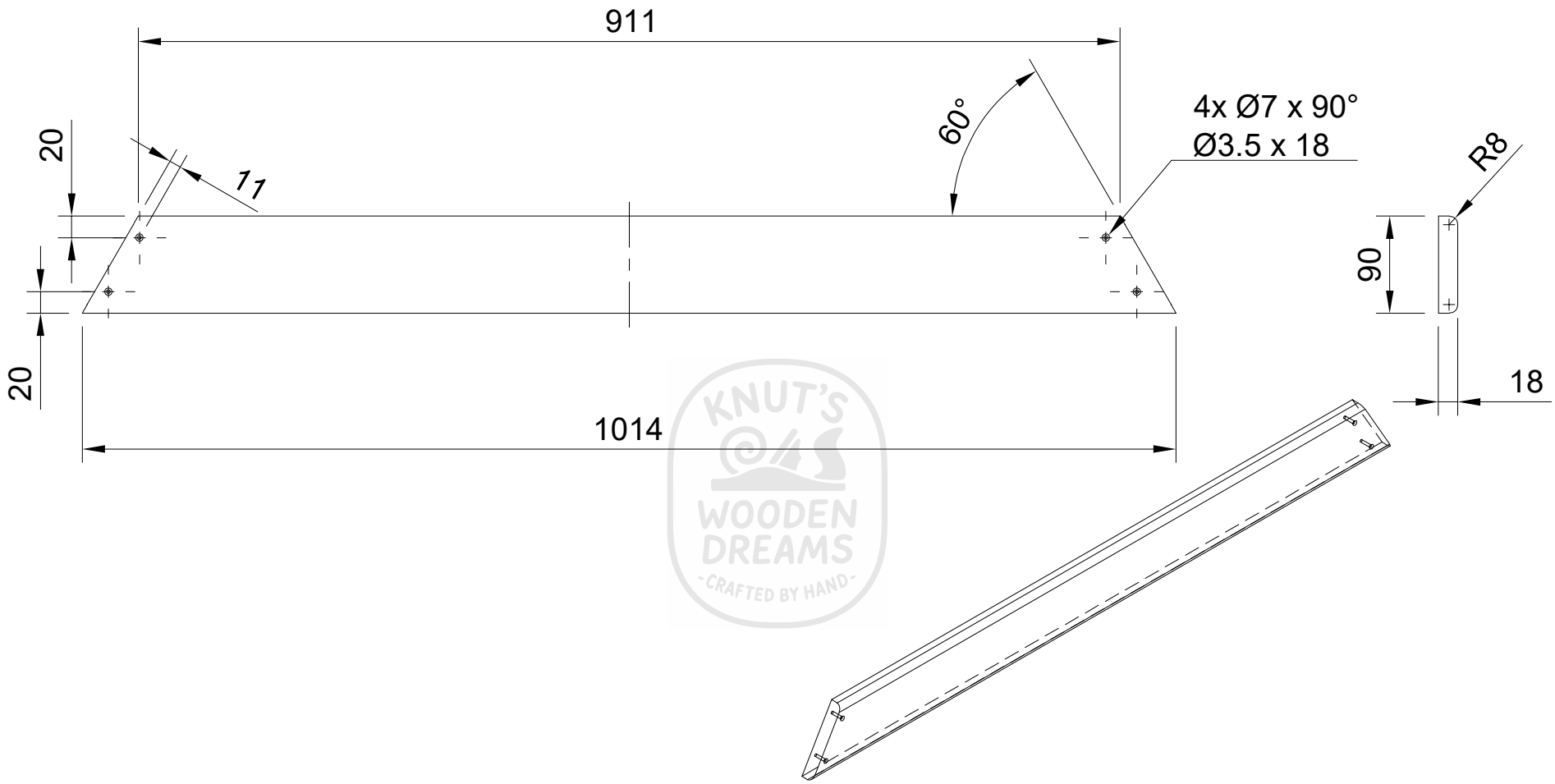

KNUT'S WOODEN DREAMS -CRAFTED BY HAND-

Dept.	Technical reference	Created by Knut Welzel 02.03.2025	Approved by
Kiefer: 1014x90x18 Masse: 0.65 kg 1 Stück		Document type	Document status
		Title Brett Sitz 3 rechts	DWG No.
			Rev. / Date of issue / Sheet 45