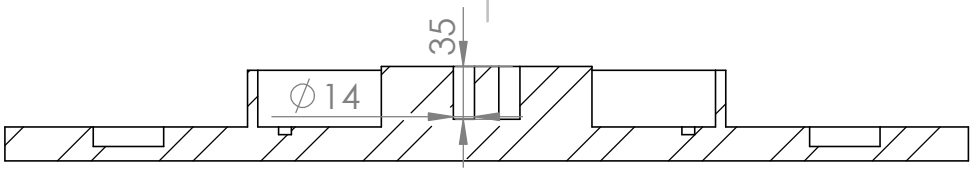

SECTION A-A
SCALE 1 : 5

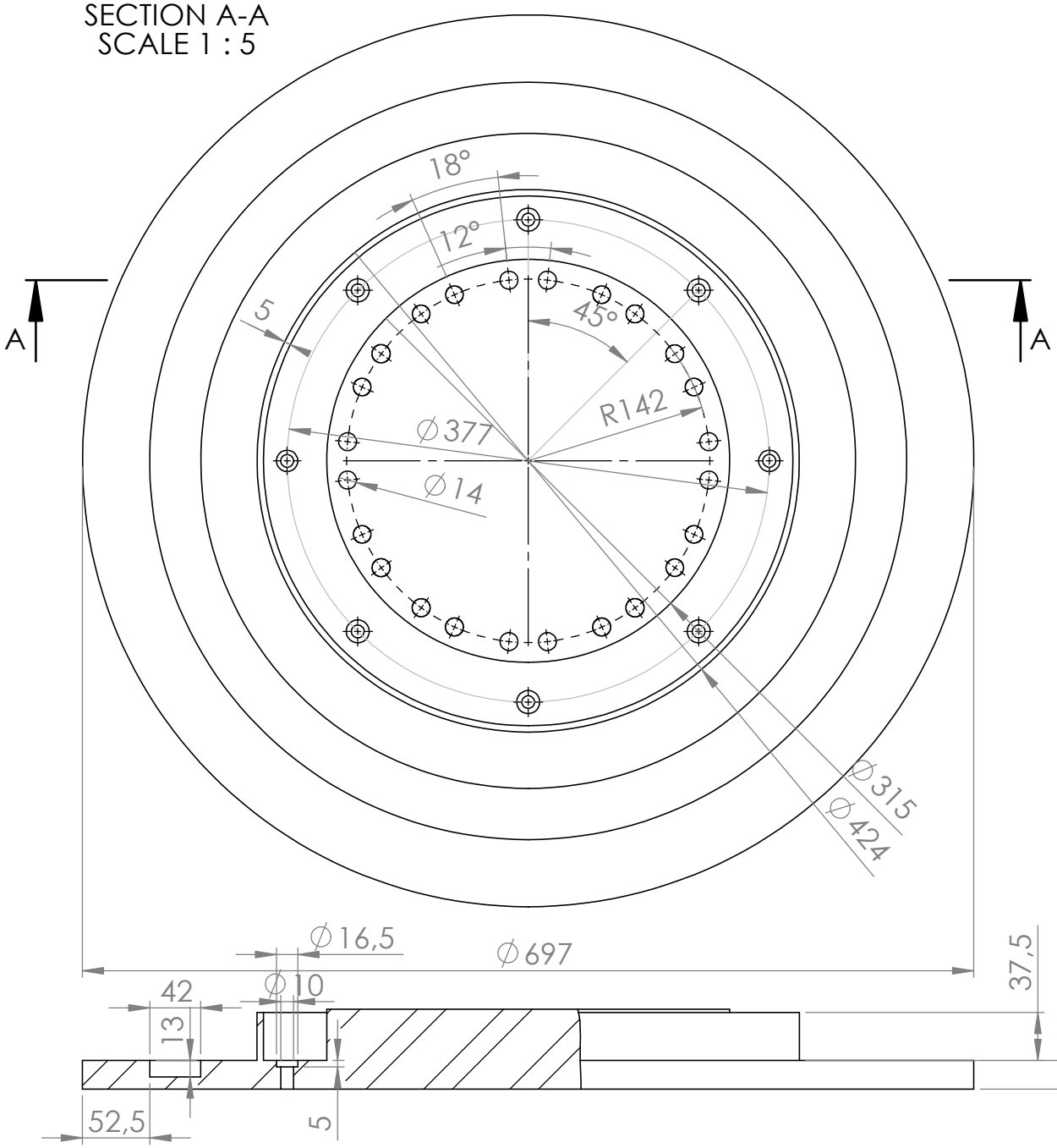

UNLESS OTHERWISE SPECIFIED: DIMENSIONS ARE IN MILLIMETERS SURFACE FINISH: TOLERANCES: LINEAR: ANGULAR:	FINISH:	DEBURR AND BREAK SHARP EDGES	DO NOT SCALE DRAWING / REVISION

	NAME	SIGNATURE	DATE
DRAWN	Sazonov		
CHK'D			
APPV'D			
MFG			
Q.A			

TITLE:

Plate

MATERIAL:

DWG NO.

A4

WEIGHT:

SCALE:1:20

SHEET 1 OF 1