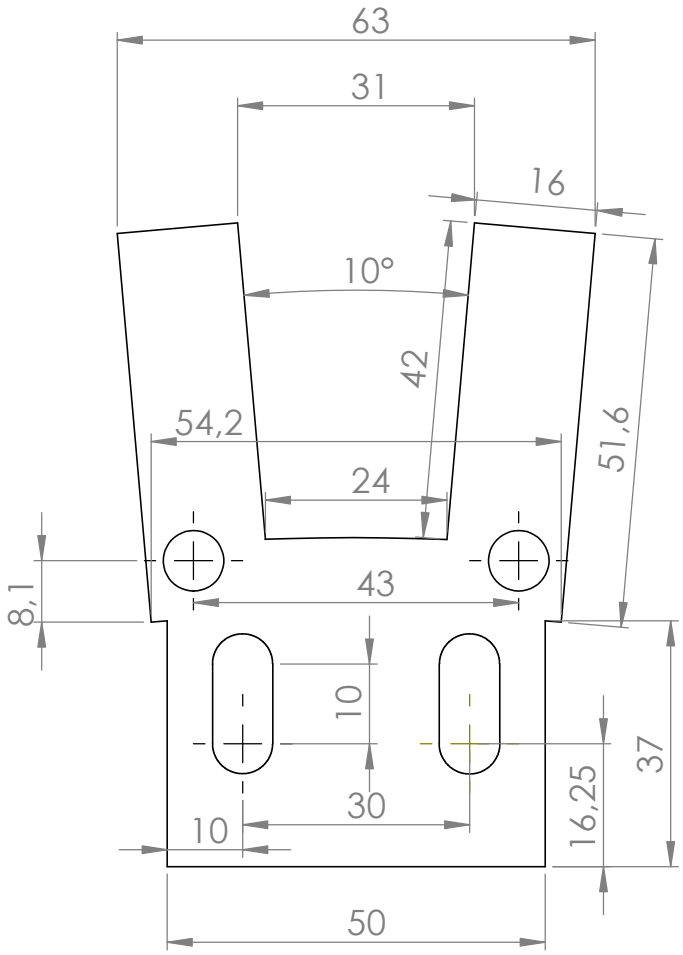


| | | | | | | | |
|---|---|---|---|---|---|---|---|
| UNLESS OTHERWISE SPECIFIED:<br>DIMENSIONS ARE IN MILLIMETERS<br>SURFACE FINISH:<br>TOLERANCES:<br>LINEAR:<br>ANGULAR: | FINISH: | | DEBURR AND BREAK SHARP EDGES | DO NOT SCALE DRAWING | | REVISION | |
| | NAME | SIGNATURE | DATE | TITLE: Accelerator stator sheet | | | |
| DRAWN | Sazonov | | | | | | |
| CHK'D | | | | | | | |
| APPV'D | | | | | | | |
| MFG | | | | | | | |
| Q.A | | | | MATERIAL: Electromagnetic steel | DWG NO. | | A4 |
| | | | | WEIGHT: | SCALE:1:2 | SHEET 1 OF 1 | |