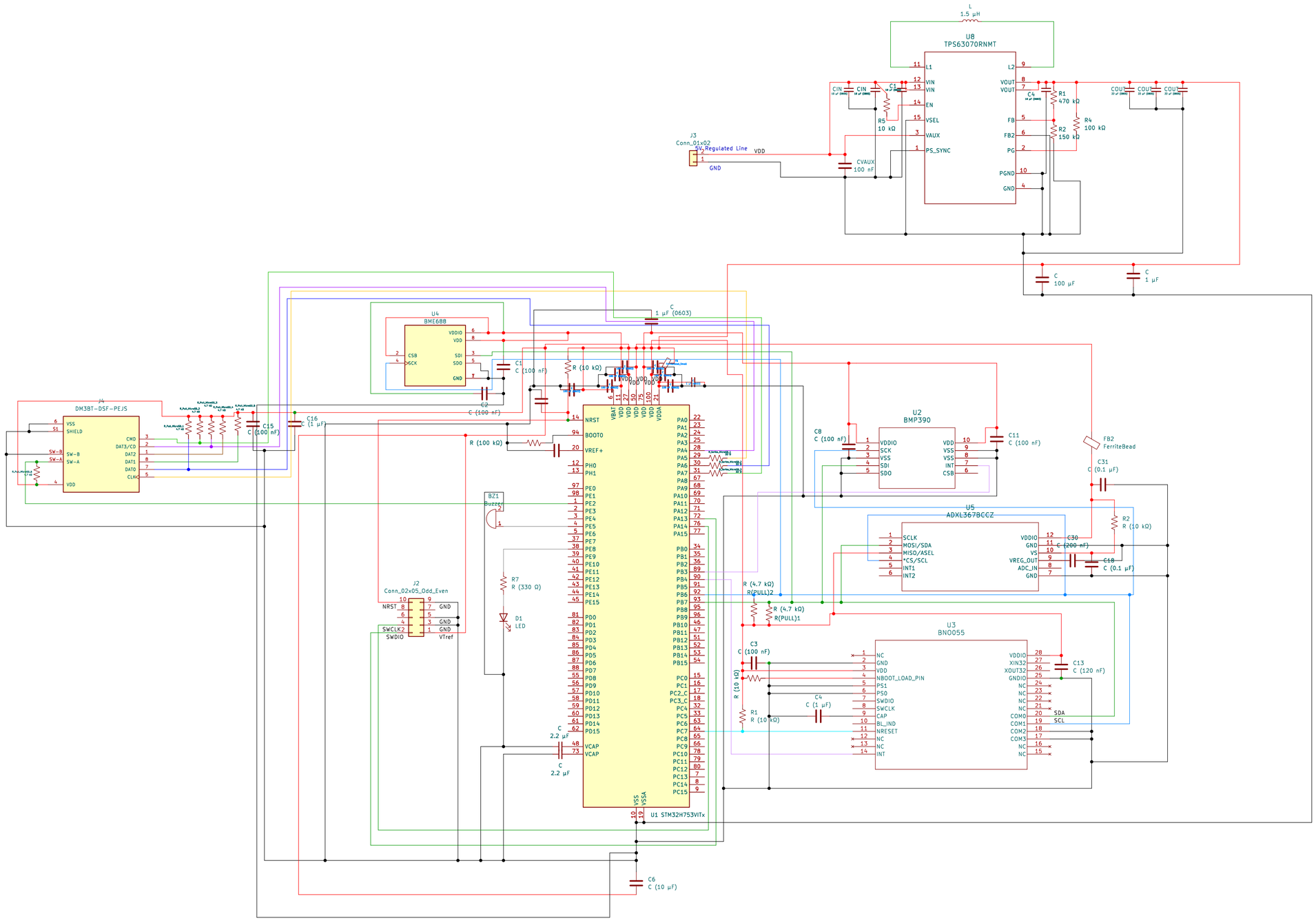

Sheet: /
File: DAQ-V1-New.kicad_sch

Title:

Size: A2	Date:	Rev:
KiCad E.D.A. 9.0.1		Id: 1/1