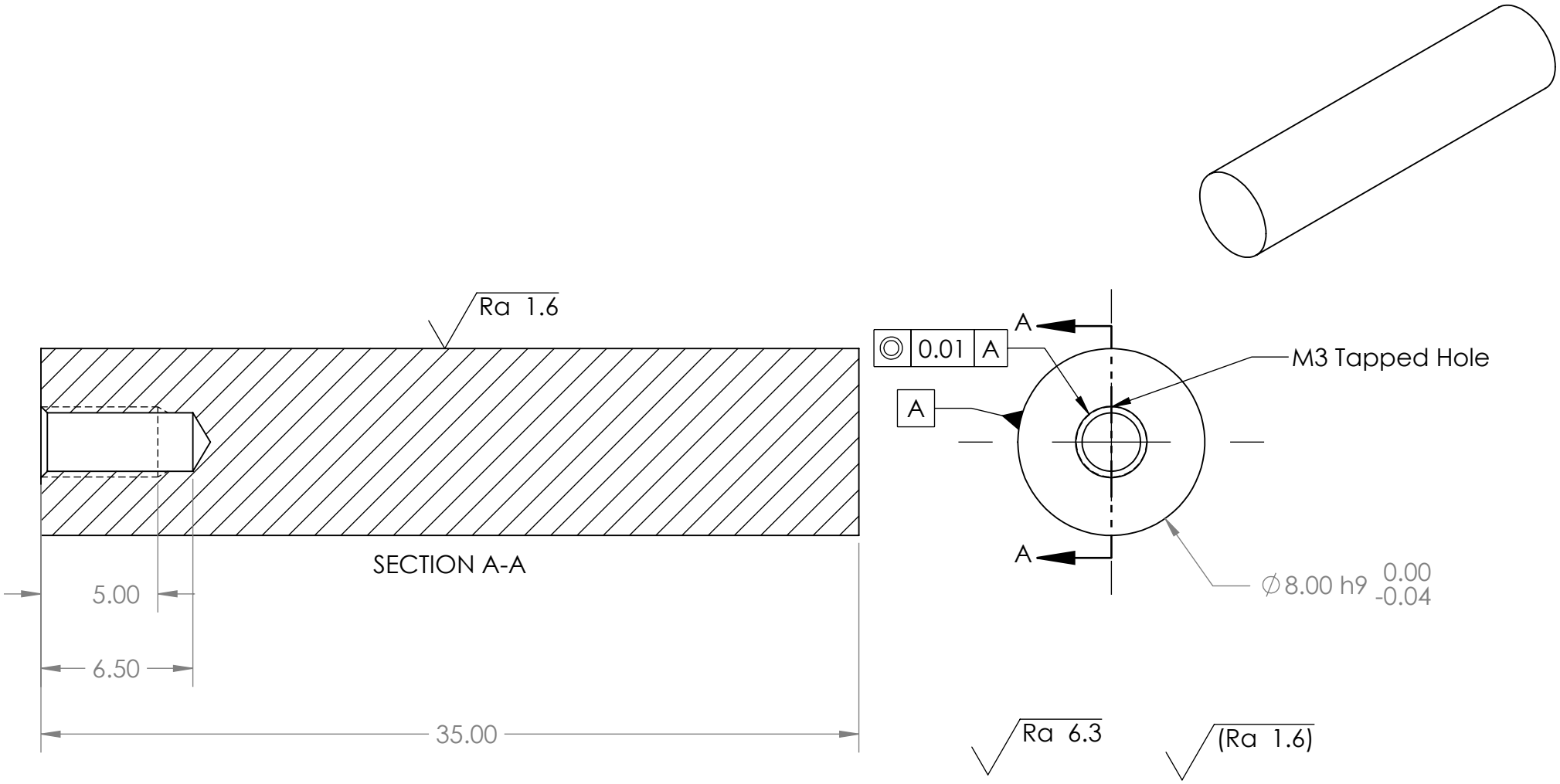

PROJECTION METHOD	UNLESS STATED OTHERWISE: TOLERANCES ± 0,1 MM	DRAWN	Samuel Pozdech	DATE	10/28/2024
		CHECKED	Marcos Alfonso	SCALE	4:1
MATERIAL: Bright drawn steel --	SURFACE TREATMENT: --	TITLE: 12112024-04-01-06-AxelCamToFrame			REV. 01
		DRAWING NO. 12112024-04-01-06			A4
UNIVERSITY OF TWENTE.		FILE / PART NAME: 12112024-04-01-06-AxelCamToFrame			
FACULTY OF ENGINEERING		DIMENSIONS IN MILLIMETERS		SHEET 1 OF 1	