Datasheet

IDN7645

1.Dry Inlay

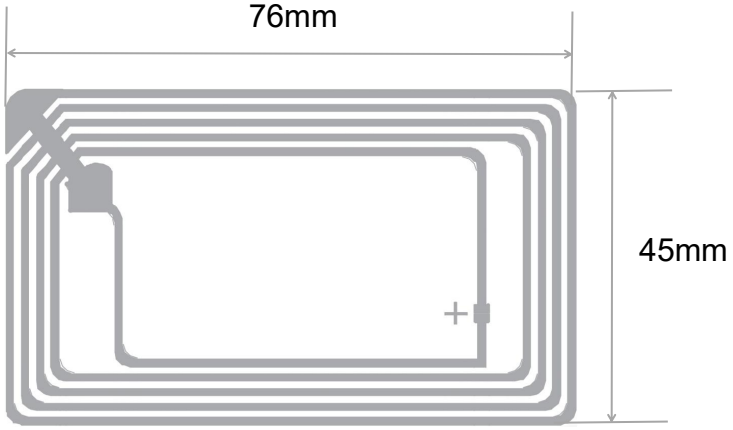

2.Technical Parameters

Item Name		Descriptions	Remark
Manufacturer/Chip		NXP NTAG213, G213	
Surface Material	wet inlay	PET	
	white label	coated paper, PET, synthetic paper, etc.	coated paper＞80%
Antenna Programming		Aluminum etching Al(9μm)+PET(50μm)	
Antenna Size		76*45mm	dry inlay
Label Size		86*54mm or customized	wet inlay/white label
Compliant Standard		ISO/IEC14443-A	
Frequency		13.56MHz	
User Memory		144 bytes	
Functions		read&write	
Read Range		0-80mm, decided by device	
Work Mode		passive	
Chip Life		write 100,000 cycles, save data for 10 years	
Chip ESD Protection		2000V	human body model (HBM)

Shenzhen IDRFID Technology Co., Ltd.

Website: www.aidirfid.com

Email: mary@idrfid.cn

3.Warnings

3.1.When transporting and using, avoid contacting with water;no violent impact, no squeezing and no bending on the chip area.

3.2.Temperature and Humidity

Operating temperature/humidity: -40℃～+70℃/20%～90% RH.

Storage temperature/humidity: -20℃～+50℃/20%～90% RH(non-condensing).

Suggested storage temperature/humidity: 20℃～30℃/50%.

4.Packing

4.1.Shipment method: in roll, electrostatic bag+carton

4.2.Shipment quantity: 1000pcs/roll, 12 rolls per carton

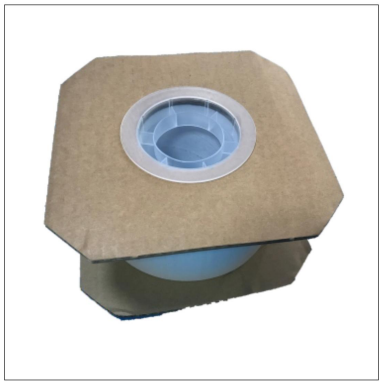

①

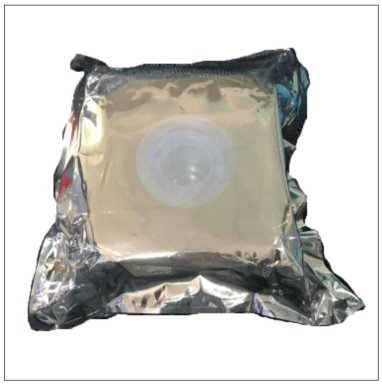

②

③

④

Shenzhen IDRFID Technology Co., Ltd.

Website: www.aidirfid.com

Email: mary@idrfid.cn