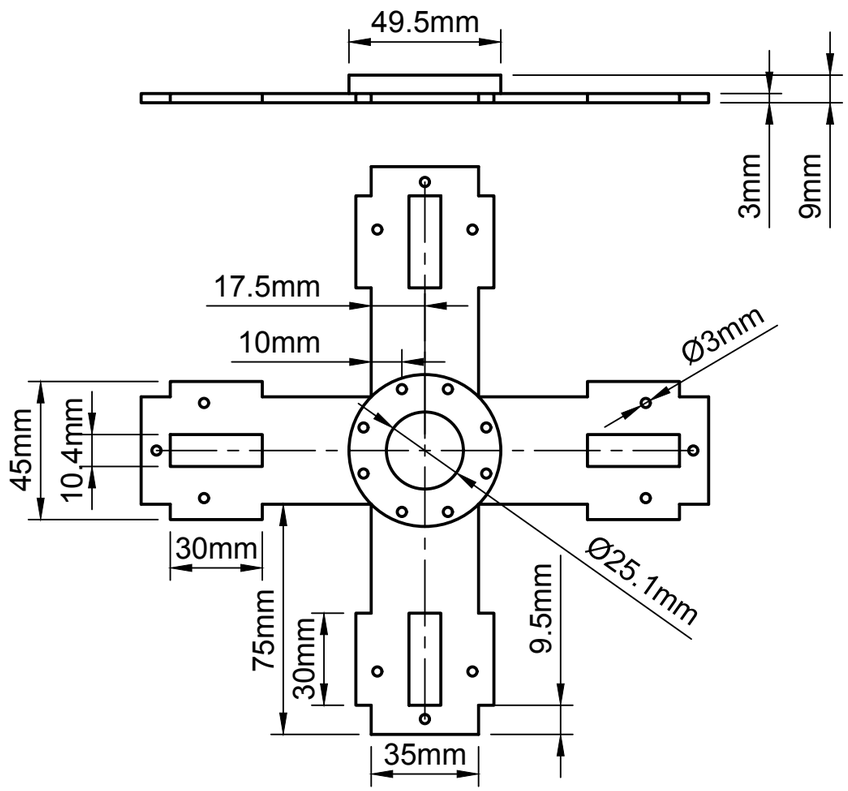

Dept.	Technical reference	Created by Charlie Bell 07/09/2018	Approved by	
		Document type	Document status	
		Title IR_Sensor_Base	DWG No.	
			Rev. / Date of issue	Sheet 1/1