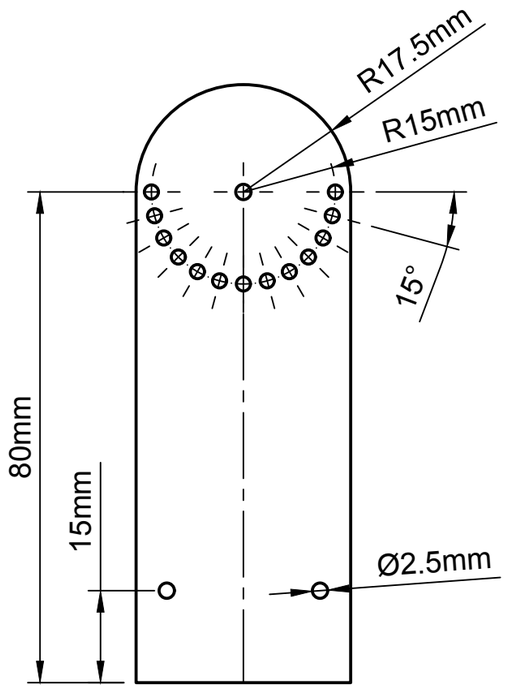

Dept.	Technical reference	Created by	Approved by
		Charlie Bell 07/09/2018	
		Document type	Document status
		Title motor_tips	DWG No.
			Rev. / Date of issue / Sheet 1/1