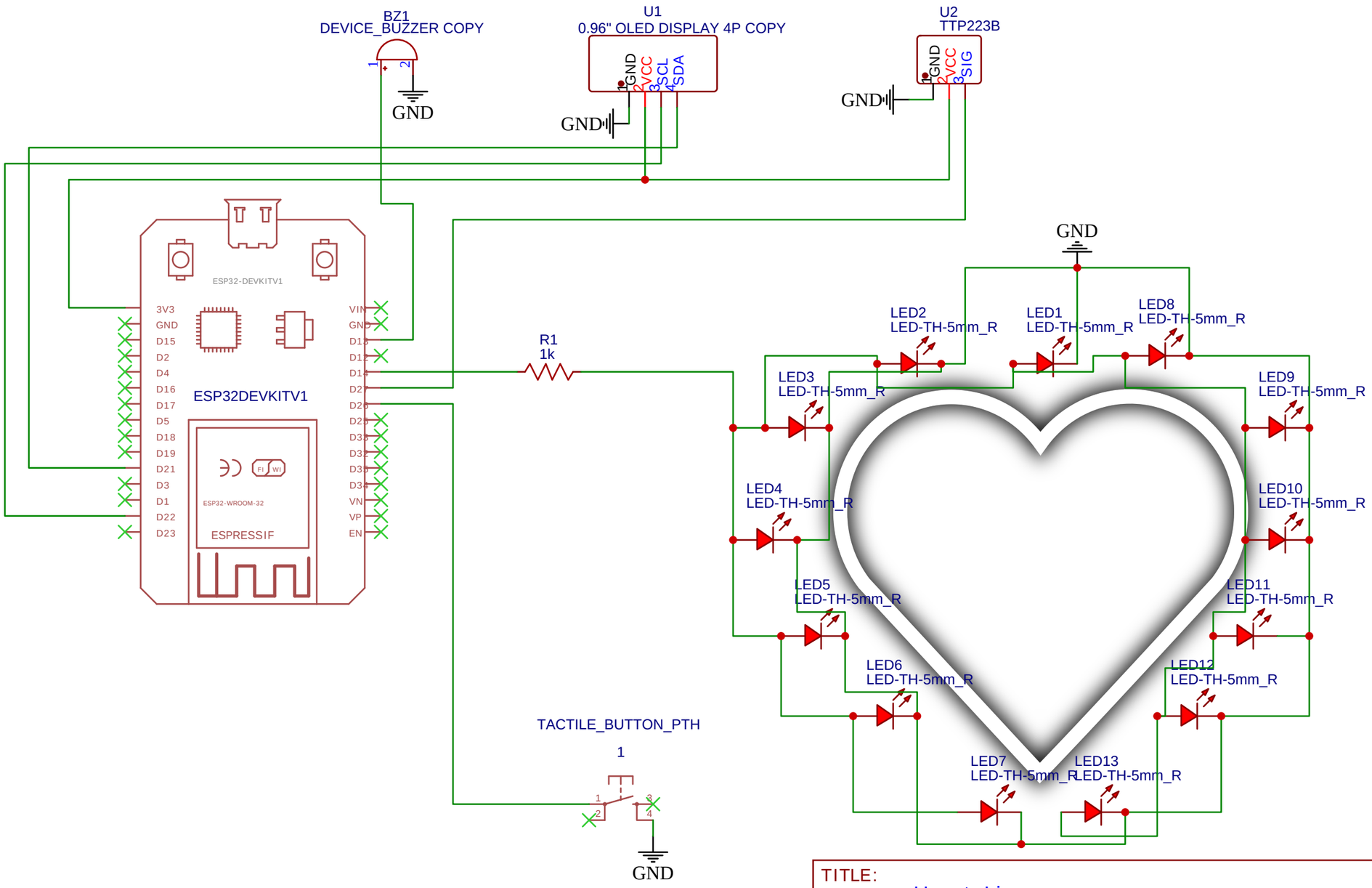

TITLE: Heart_Line	REV: 1.0
Company: Your Company	Sheet: 1/1
Date: 2026-04-08 Drawn By: Yogesh Bawane	

EasyEDA