April 20, 2026

CE4011 Assignment 4

Special Topics in Civil Engineering:
Structural Analysis Software Development

Spring Semester 2025–2026

GitHub Repository: `https://github.com/ImranMETU/CE4011_Assignment4`

Submitted By

Imran Shahriar

2735835

MSc. in Structural Engineering

Submitted To

Prof. Dr. Ozgur Kurc

Contents

1 Revised Object-Oriented Structural Analysis Program **1**

1.1 Introduction . . . 1

1.2 Analysis and Design Decisions . . . 2

1.2.1 Thermal vs Settlement Modeling . . . 2

1.2.2 Modification Strategy . . . 2

1.3 Module Change Table . . . 4

1.4 Revised UML and Class Modifications . . . 5

1.4.1 Updated Class Responsibilities . . . 5

1.4.2 UML/Class Diagram . . . 5

1.4.3 Updated Relationships for Thermal and Settlement Effects . . . 6

1.5 Thermal Loading Extension . . . 8

1.5.1 Modeling Approach . . . 8

1.5.2 Uniform Temperature Change . . . 8

1.5.3 Thermal Gradient Effects . . . 8

1.5.4 Implementation in Elements . . . 8

1.6 Support Settlement Extension . . . 9

1.6.1 Settlement Modeling Approach . . . 9

1.6.2 Partitioned System Formulation . . . 9

1.7 Updated Relationships and Workflow . . . 10

1.8 Input Format . . . 11

1.8.1 Data Schema Overview . . . 11

1.8.2 Example Input Snippet . . . 11

1.9 Output Format . . . 12

1.9.1 Reported Quantities . . . 12

1.9.2 Output Table Structure . . . 12

1.10 File Structure . . . 13

1.10.1 Top-Level Directory Structure . . . 13

1.10.2 Directory Description . . . 13

2 Testing and Verification **15**
2.1 Testing Framework 15
2.2 Unit Tests 15
2.2.1 UT-T1: Fixed-Fixed Truss under Uniform Temperature 15
2.2.2 UT-T2: Fixed-Fixed Frame under Pure Thermal Gradient 16
2.2.3 UT-S1: Single-Member Settlement Response 17
2.2.4 UT-S2: Zero Settlement Equals No Settlement 17
2.3 Interface and Integration Tests 18
2.3.1 IT-T1: Frame with One Thermal Member 18
2.3.2 IT-T2: Mixed Frame-Truss System with Thermal Loading 18
2.3.3 IT-S1: Frame with One Prescribed Support Displacement 19
2.3.4 IT-S2: Multi-Member System with Settlement 19
2.4 Thermal Cases 20
2.4.1 Unit Tests 20
2.4.2 Interface Tests 20
2.5 Settlement Cases 21
2.5.1 Unit Tests 21
2.5.2 Interface Tests 21
2.6 Summary Table of Verification Results 22
2.7 Regression Tests (External Verification) 23
2.7.1 Test R1: Uniform Thermal Truss 24
2.7.2 Test R2: Pure Thermal Gradient Frame 24
2.7.3 Test R3: Combined Thermal Frame 25
2.7.4 Test R4: Frame Settlement 26
2.7.5 Regression Tests Summary 27

3 Analysis of Assignment Structures **28**
3.1 Overview of Assignment Structures 28
3.2 Structure (a): Settlement Case 29
3.2.1 Model Description 29
3.2.2 Input Assumptions 30
3.2.3 Solver Results 30
3.2.4 Benchmark Comparison 31
3.3 Structure (b): Thermal Loading Case 32
3.3.1 Model Description 32
3.3.2 Thermal Loading Definition 33
3.3.3 Input Assumptions 35
3.3.4 Solver Results 36
3.3.5 Benchmark Comparison 36

3.4 Discussion of Discrepancies 38
3.4.1 Observed Differences 38
3.4.2 Potential Sources of Error 38
3.4.3 Engineering Interpretation 39

4 Conclusion **40**

5 References **41**

List of Figures

1.1 Revised UML/Class Diagram showing thermal and settlement extensions 5
1.2 Updated analysis workflow incorporating thermal and settlement effects . 10

2.1 Pytest console output for the 8 mandatory unit and interface tests 23
2.2 Regression Test R1 model in FTool: uniform thermal truss case 24
2.3 Regression Test R2 model in FTool: pure thermal gradient frame case . . 25
2.4 Regression Test R3 model in FTool: combined thermal frame case 25
2.5 Regression Test R4 model in FTool: settlement frame case 26

3.1 Model of Structure (a): Settlement Case (Case 2a) 29
3.2 FTOOL Benchmark Output for Structure (a) 32
3.3 Model of Structure (b): Thermal Loading Case (Case 2b) 33
3.4 FTOOL Benchmark Output for Structure (b) 37

List of Tables

1.1 Module/Class changes introduced in Assignment 4 4
1.2 Updated class relationships in Assignment 4 7
1.3 Output quantities 12

2.1 UT-T1: Uniform Thermal Truss 20
2.2 UT-T2: Thermal Gradient Frame 20
2.3 IT-T1: Frame with One Thermal Member 20
2.4 IT-T2: Mixed Frame-Truss Thermal System 20
2.5 UT-S1: Single-Member Settlement 21
2.6 UT-S2: Zero Settlement Consistency 21
2.7 IT-S1: Frame Settlement 21
2.8 IT-S2: Mixed System Settlement 22
2.9 Consolidated Verification Summary 22
2.10 Regression Test R1: Uniform Thermal Truss 24
2.11 Regression Test R2: Thermal Gradient Frame 25
2.12 Regression Test R3: Combined Thermal Frame 26
2.13 Regression Test R4: Settlement Frame 27

3.1 Nodal Displacements 30
3.2 Support Reactions 31
3.3 Member-End Forces 31
3.4 Benchmark Comparison 32
3.5 Thermal gradient sign convention summary 34
3.6 Nodal Displacements 36
3.7 Support Reactions 36
3.8 Member-End Forces 36
3.9 Q2(b) Thermal Case Benchmark Comparison 37

Chapter 1

Revised Object-Oriented Structural Analysis Program

1.1 Introduction

Assignment 4 extends the Assignment 3 object-oriented Direct Stiffness Method (DSM) solver to include two additional physical actions: thermal loading and support settlement. The extension is intentionally conservative in software architecture and mathematical formulation: thermal actions are modeled through equivalent nodal loads (fixed-end effects) and therefore do not modify the global stiffness matrix, while support settlements are modeled as prescribed displacements and solved through the partitioned DSM equations.

This separation is not only mathematically consistent but also critical for software continuity. Thermal effects are introduced as load-vector contributions generated at element level, whereas settlements alter boundary conditions and appear in the global system through restrained displacement terms. The same class backbone, assembly process, and solve-recover workflow from Assignment 3 are retained. Consequently, backward compatibility is preserved: when thermal loads are absent and prescribed settlements are zero, the solver behavior reduces to the original Assignment 3 implementation.

The objective of this chapter is to justify these design choices and document how the new capabilities were integrated without changing the core architecture.

1.2 Analysis and Design Decisions

1.2.1 Thermal vs Settlement Modeling

Thermal actions and support settlements require different treatments because they enter the DSM equations in different ways. Thermal effects originate as strain-induced member actions, so they are transformed into element fixed-end forces and assembled into the global load vector. Settlements are imposed kinematic constraints at supports, so they are introduced as prescribed restrained displacements in the partitioned global equations.

This distinction ensures that:

- Thermal effects are handled locally within element formulations
- Settlement effects are handled globally through system partitioning

A unified `TemperatureLoad` representation was adopted with fields T_{uniform}, T_{top}, and T_{bottom} to avoid duplicating load definitions across element types and to keep the load abstraction consistent. Element-specific behavior is handled polymorphically (`FrameElement` vs. `TrussElement`), where frame elements generate both axial and bending effects while truss elements retain axial-only behavior. This design improves extensibility at the cost of requiring conditional handling within element implementations.

1.2.2 Modification Strategy

The solver was extended using the following approach:

- The `Material` class was extended to include the coefficient of thermal expansion α
- The `Section` class was extended to include section depth d for thermal gradient calculations
- The `Node` class was extended to store prescribed displacements
- The `FrameElement` and `TrussElement` classes were extended to compute thermal fixed-end forces
- The `Structure` class was extended to solve the partitioned system for settlement

The placement of parameters follows physical ownership: α is a material property, depth d is a section property, prescribed settlements are nodal boundary data, and the partitioned solution belongs to the global `Structure` solve stage. This preserves separation of concerns, minimizes disruption to the Assignment 3 codebase, and keeps the extension traceable.

When prescribed settlements are zero, the settlement formulation gives

$$K_{ff}u_f = F_f, \tag{1.1}$$

which is exactly the Assignment 3 free-DOF system.

1.3 Module Change Table

Table 1.1: Module/Class changes introduced in Assignment 4

Module / Class	Modification	Rationale
Material	Added thermal expansion coefficient α	Thermal strain is a material law parameter
Section	Added depth d	Thermal gradient curvature depends on section depth
Node	Added prescribed displacement storage	Settlements are nodal boundary conditions
FrameElement	Added thermal fixed-end force evaluation (axial + bending)	Frame members carry axial and flexural thermal effects
TrussElement	Added thermal fixed-end force evaluation (axial only)	Truss members carry axial force only
Structure	Added partitioned solve terms with restrained displacements	Settlements modify global RHS through $-K_{fr}u_r$

1.4 Revised UML and Class Modifications

1.4.1 Updated Class Responsibilities

Class responsibilities were refined but not restructured. `Material` owns α, `Section` owns d, `Node` owns prescribed displacements, element classes compute local thermal fixed-end contributions, and `Structure` owns global partitioning and solution. This allocation keeps each class responsible for data and operations at its natural abstraction level.

1.4.2 UML/Class Diagram

The UML reflects targeted extensions rather than architectural replacement. The inheritance backbone is preserved exactly as in Assignment 3, with `Element` as base class and `FrameElement`/`TrussElement` as specialized subclasses. No new parallel hierarchy was introduced; only relevant attributes/methods were added to existing classes.

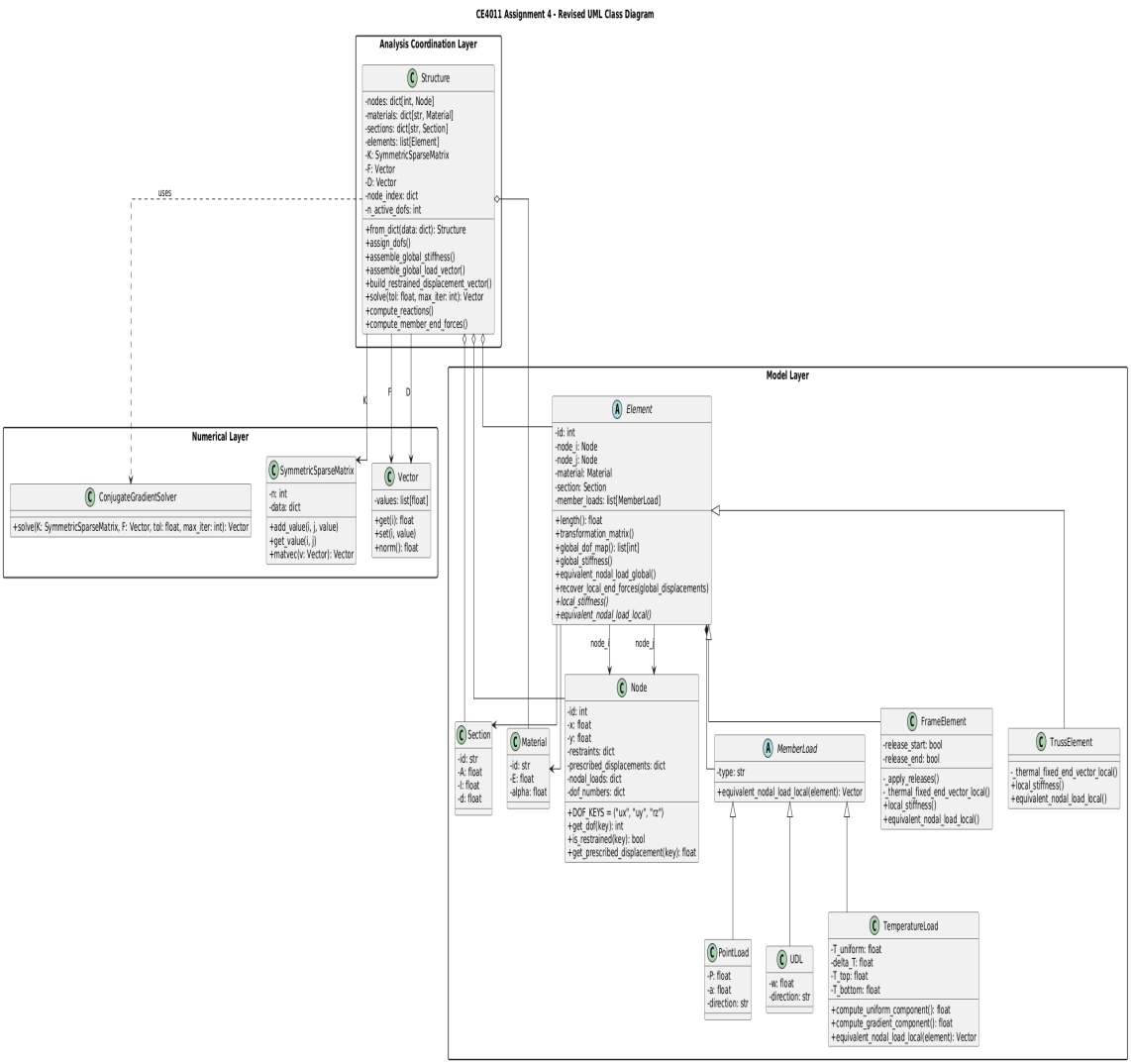

Figure 1.1: Revised UML/Class Diagram showing thermal and settlement extensions

1.4.3 Updated Relationships for Thermal and Settlement Effects

Assignment 4 adds thermal loading and settlement handling without changing the core object model. The main relationship updates affect `Element`, `FrameElement`, and `Structure`.

Element–Thermal Load Relationship

Each `Element` composes thermal load data and normalizes it into:

- Uniform temperature change (T_{uniform})
- Temperature gradient (ΔT)

These parameters are converted to equivalent fixed-end forces in local coordinates before global assembly, consistent with DSM load treatment.

FrameElement Specialisation

`FrameElement` supports axial and flexural thermal effects:

- Uniform temperature change produces axial forces:

$$N_t = EA\alpha T_{\text{uniform}}$$

- Temperature gradients produce bending moments:

$$M_t = \frac{EI\alpha\Delta T}{d}$$

These contributions are added to the local fixed-end vector and transformed during assembly. By contrast, `TrussElement` remains axial-only, so thermal-gradient bending is ignored.

Structure–Prescribed Displacement Relationship

Support settlements are modeled as non-zero prescribed displacements at constrained DOFs. The partitioned system is:

$$\begin{bmatrix} K_{ff} & K_{fc} \\ K_{cf} & K_{cc} \end{bmatrix} \begin{bmatrix} d_f \\ d_c \end{bmatrix} = \begin{bmatrix} F_f \\ F_c \end{bmatrix}$$

with d_f as unknown free DOFs and d_c as prescribed displacements. The reduced equation is:

$$K_{ff}d_f = F_f - K_{fc}d_c$$

so settlement effects enter the RHS while preserving the global stiffness formulation.

Updated Relationship Summary

The extension preserves Assignment 3 architecture while adding:

- Element now composes thermal load definitions
- FrameElement includes thermal force and moment generation
- Structure handles prescribed displacements through system partitioning

Table 1.2: Updated class relationships in Assignment 4

From	To	Type	Description
Element	Thermal Load	Composition	Element owns thermal load data
FrameElement	Thermal Effects	Specialisation	Generates axial and bending thermal effects
Structure	Prescribed DOF	Association	Handles non-zero displacement constraints

1.5 Thermal Loading Extension

1.5.1 Modeling Approach

Thermal effects are incorporated using fixed-end force equivalence. The element-level thermal strain field is converted into equivalent nodal actions and assembled into the global load vector. Therefore, thermal loading changes the right-hand side but not the global stiffness matrix.

1.5.2 Uniform Temperature Change

A uniform temperature change produces an axial strain:

$$\epsilon_{th} = \alpha \Delta T \tag{1.2}$$

For a fully restrained member, this results in an axial force:

$$N_t = EA\alpha\Delta T \tag{1.3}$$

This is the mean-temperature contribution and corresponds to an axial effect.

1.5.3 Thermal Gradient Effects

A temperature gradient across the section depth induces curvature:

$$\kappa = \alpha \frac{\Delta T}{d} \tag{1.4}$$

The resulting bending moment is:

$$M_t = EI\alpha \frac{\Delta T}{d} \tag{1.5}$$

This is the gradient-temperature contribution and corresponds to a bending effect.

1.5.4 Implementation in Elements

Thermal decomposition is implemented at element level:

- Mean temperature component $\rightarrow$ axial thermal force
- Gradient component $\rightarrow$ bending thermal moment

Frame elements can carry both thermal axial force and thermal bending moment. Truss elements carry only thermal axial force, with no thermal bending terms.

1.6 Support Settlement Extension

1.6.1 Settlement Modeling Approach

Support settlements are modeled as prescribed displacements at restrained degrees of freedom. Unlike thermal effects, settlement is not an element load; it modifies boundary kinematics and enters the partitioned global equations.

1.6.2 Partitioned System Formulation

The global stiffness equation is partitioned as:

$$\begin{bmatrix} K_{ff} & K_{fr} \\ K_{rf} & K_{rr} \end{bmatrix} \begin{Bmatrix} u_f \\ u_r \end{Bmatrix} = \begin{Bmatrix} F_f \\ F_r \end{Bmatrix} \tag{1.6}$$

For non-zero prescribed displacements, the system is solved as:

$$K_{ff} u_f = F_f - K_{fr} u_r \tag{1.7}$$

Support reactions are obtained from:

$$F_r = K_{rf} u_f + K_{rr} u_r \tag{1.8}$$

In implementation, `Structure` constructs u_r from nodal prescribed displacement data and applies settlement by modifying the right-hand side with the $-K_{fr} u_r$ term before solving for u_f.

1.7 Updated Relationships and Workflow

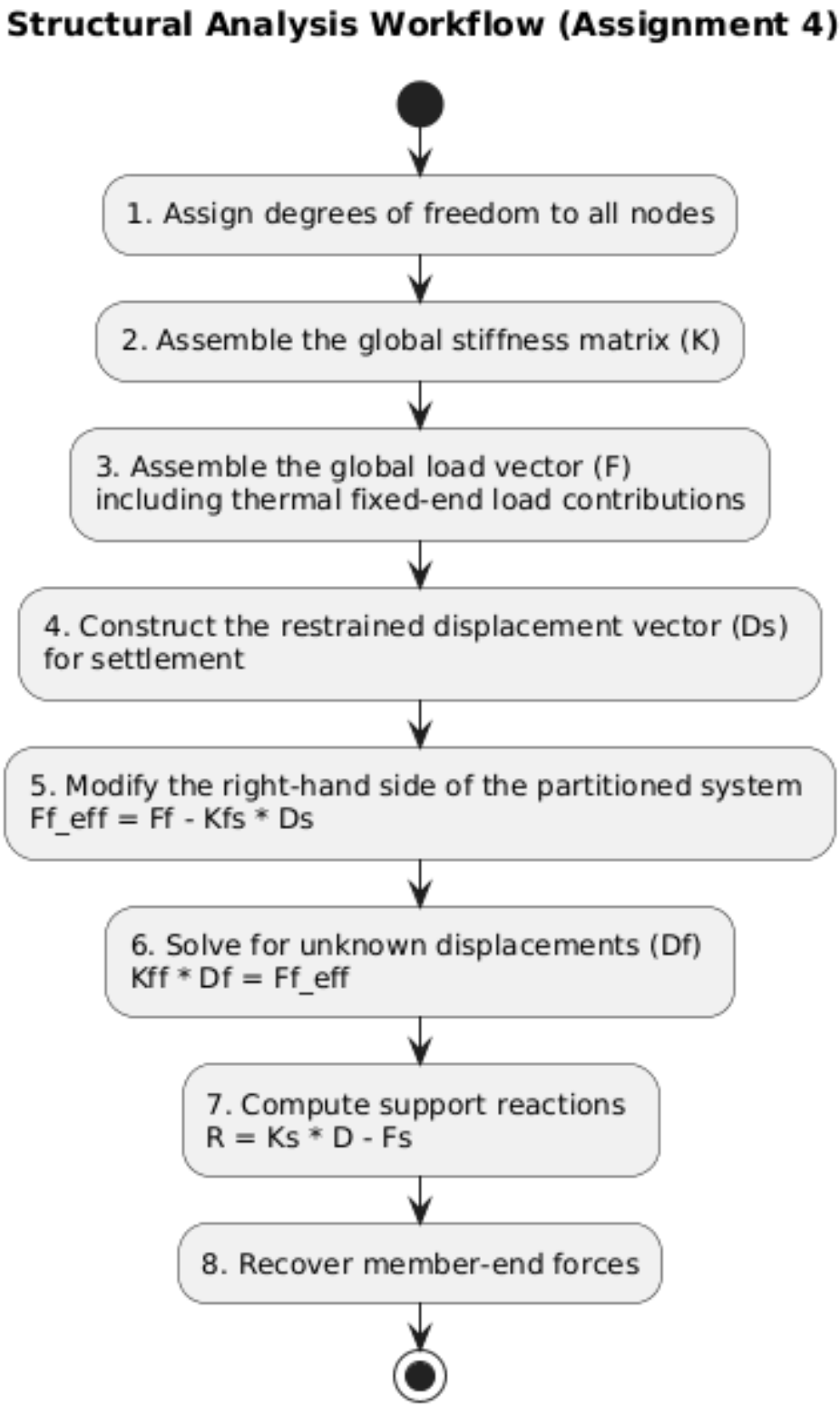

Figure 1.2: Updated analysis workflow incorporating thermal and settlement effects

1.8 Input Format

1.8.1 Data Schema Overview

The solver supports both JSON and XML inputs. In both formats, thermal actions are defined at element/member-load level, while settlements are defined as prescribed displacements at restrained nodal DOFs.

1.8.2 Example Input Snippet

Listing 1.1: Example XML snippet from ModelB thermal case

```xml
<structure>
    <nodes>
        <node id="2" x="7.0" y="8.0">
            <restraints ux="false" uy="false" rz="false" />
        </node>
    </nodes>

    <elements>
        <element id="1" type="frame" node_i="1" node_j="2"
           material="concrete" section="beam">
            <member_loads>
                <thermal T_top="0.0" T_bottom="50.0" />
            </member_loads>
        </element>
        <element id="3" type="truss" node_i="4" node_j="2"
           material="steel" section="pipe">
            <member_loads>
                <thermal T_uniform="50.0" />
            </member_loads>
        </element>
    </elements>
</structure>
```

1.9 Output Format

1.9.1 Reported Quantities

The solver produces the following outputs:

- Nodal displacements
- Support reactions
- Member-end forces in local coordinates

1.9.2 Output Table Structure

Table 1.3: Output quantities

Quantity	Unit	Description
Displacement	m, rad	Nodal DOFs
Reaction	N, Nm	Support forces and moments
Member-end forces	N, Nm	Local element forces

1.10 File Structure

The Assignment 4 project is organized into a modular directory structure to separate source code, input data, testing, results, and documentation. This organization improves maintainability, readability, and reproducibility of the analysis workflow.

GitHub repository: `https://github.com/ImranMETU/CE4011_Assignment4`

1.10.1 Top-Level Directory Structure

```
Assignment4/
|
|-- benchmark/          # Benchmark models and exports (FTOOL/SAP2000)
|-- docs/               # Supporting documentation and notes
|-- inputs/             # Input files for analysis (XML/JSON)
|-- report/             # LaTeX report files (main.tex, chapters, figures)
|-- results/            # Solver outputs and comparison results
|-- scripts/            # Execution scripts (run_thermal, run_model_b, etc.)
|-- settlement/         # Settlement-specific cases and utilities
|-- thermal/            # Thermal load utilities and related modules
|-- src/                # Core solver implementation
|-- tests/              # Unit, interface, and regression tests
|
|-- .gitignore          # Git ignore rules
`-- README.md           # Project overview and usage instructions
```

1.10.2 Directory Description

- **src/**: Contains the core object-oriented implementation of the structural analysis solver, including element definitions, material models, and global assembly routines.
- **thermal/**: Implements thermal load functionality, including temperature normalization, fixed-end force calculations, and equivalent nodal load generation.
- **settlement/**: Contains logic and utilities for handling prescribed displacements and support settlement effects.
- **scripts/**: Includes executable Python scripts used to run analysis cases, such as thermal simulations, regression tests, and assignment-specific models.
- **inputs/**: Stores structured input files defining geometry, materials, boundary conditions, and loads for different analysis cases.

- **tests/**: Provides unit, interface, and regression tests used to verify solver correctness and validate new features introduced in Assignment 4.
- **results/**: Contains solver outputs, processed results, and comparison data used for validation against benchmark software.
- **benchmark/**: Includes verification models and exported results for benchmark comparison (with subfolders such as `ftool/` and `sap2000/`).
- **report/**: Contains all LaTeX source files, figures, and tables required to generate the final report.
- **docs/**: Stores supplementary documentation, notes, or design references used during development.
- **README.md**: Provides instructions for running the solver, executing tests, and reproducing results.

Chapter 2

Testing and Verification

2.1 Testing Framework

The tests discussed in this chapter are listed below in order:

1. UT-T1: Fixed-Fixed Truss under Uniform Temperature
2. UT-T2: Fixed-Fixed Frame under Pure Thermal Gradient
3. UT-S1: Single-Member Settlement Response
4. UT-S2: Zero Settlement Equals No Settlement
5. IT-T1: Frame with One Thermal Member
6. IT-T2: Mixed Frame-Truss System with Thermal Loading
7. IT-S1: Frame with One Prescribed Support Displacement
8. IT-S2: Multi-Member System with Settlement
9. Regression Tests (External Verification)

2.2 Unit Tests

2.2.1 UT-T1: Fixed-Fixed Truss under Uniform Temperature

Theory: A uniform temperature change in a constrained axial member induces a pure axial force due to prevented thermal expansion. The thermal strain is:

$$\varepsilon_T = \alpha \Delta T$$

For a fully restrained member:

$$\varepsilon_{\text{total}} = 0 \Rightarrow \varepsilon_{\text{mech}} = -\alpha \Delta T$$

Thus, the induced axial force is:

$$N_t = EA\alpha\Delta T$$

No shear or moment is generated.

Implementation: The thermal effect is introduced as an equivalent fixed-end force vector:

$$f_{th}^{local} = [-N_t,\ 0,\ 0,\ +N_t,\ 0,\ 0]$$

Since all DOFs are restrained, displacements are zero and reactions directly recover the thermal force.

Validation Objective:

- Correct axial force magnitude and sign
- No artificial shear or moment
- Proper handling of fully restrained systems

2.2.2 UT-T2: Fixed-Fixed Frame under Pure Thermal Gradient

Theory: A temperature gradient across the depth produces curvature:

$$\kappa = \frac{\alpha \Delta T}{d}$$

The resulting thermal moment is:

$$M_t = EI\kappa = \frac{EI\alpha\Delta T}{d}$$

For zero mean temperature:

$$N_t = 0$$

Thus, the response consists of equal and opposite end moments.

Implementation: The equivalent fixed-end vector is:

$$f_{th}^{local} = [0,\ 0,\ -M_t,\ 0,\ 0,\ +M_t]$$

The structure is fully restrained, so reactions directly represent thermal moments.

Validation Objective:

- Correct conversion of gradient to bending moment
- Zero axial force for zero mean temperature
- Correct rotational DOF response

2.2.3 UT-S1: Single-Member Settlement Response

Theory: Support settlement introduces prescribed displacement:

$$u_r \neq 0$$

The reduced system becomes:

$$K_{ff}u_f = F_f - K_{fr}u_r$$

For a fixed-fixed beam:

$$M = \frac{6EI\delta}{L^2}, \quad V = \frac{12EI\delta}{L^3}$$

Implementation: The settlement is imposed at a restrained DOF. The equivalent force contribution is:

$$F_{\text{equiv}} = -K_{fr}u_r$$

The reduced system is solved and reactions are recovered using:

$$R = K_{rf}u_f + K_{rr}u_r$$

Validation Objective:

- Correct modification of RHS vector
- Accurate recovery of reactions
- Agreement with closed-form beam solution

2.2.4 UT-S2: Zero Settlement Equals No Settlement

Theory: When:

$$u_r = 0$$

the governing equation reduces to:

$$K_{ff}u_f = F_f$$

which must reproduce the original solution.

Implementation: The solver is executed with settlement logic enabled but with all prescribed displacements set to zero.

Validation Objective:

- Backward compatibility with Assignment 3
- No unintended numerical artifacts

2.3 Interface and Integration Tests

2.3.1 IT-T1: Frame with One Thermal Member

Theory: In a partially restrained structure, thermal expansion induces both displacements and internal forces governed by:

$$Ku = F_{th}$$

Implementation: A small frame is analyzed with one thermally loaded element. Thermal effects are converted to equivalent nodal loads and assembled into the global force vector. The full system is solved for displacements.

Validation Objective:

- Proper assembly of thermal load into global system
- Compatibility-driven force redistribution
- Correct displacement response

2.3.2 IT-T2: Mixed Frame-Truss System with Thermal Loading

Theory: Different element types respond differently:

- Frame elements: axial + bending
- Truss elements: axial only

System equilibrium requires compatibility across all elements.

Implementation: Thermal loads are applied as:

- Gradient + mean for frame elements
- Uniform temperature for truss elements

The system is assembled and solved, and internal forces are recovered using:

$$q = k_{local} u_{local} - f_{thermal}$$

Validation Objective:

- Correct element-specific behavior
- No bending in truss elements
- Proper multi-element interaction

2.3.3 IT-S1: Frame with One Prescribed Support Displacement

Theory: Settlement introduces compatibility-driven deformation governed by:

$$K_{ff} u_f = F_f - K_{fr} u_r$$

Implementation: A single support displacement is applied in a small frame. The global system is assembled with modified RHS and solved for unknown displacements.

Validation Objective:

- Correct propagation of settlement through structure
- Accurate internal force redistribution

2.3.4 IT-S2: Multi-Member System with Settlement

Theory: In mixed systems:

- Frame members resist bending and axial forces
- Truss members resist axial forces only

Settlement effects propagate through compatibility across all elements.

Implementation: A multi-member system (frame + truss) is analyzed with prescribed displacement at one node. The full system is solved and member forces are recovered.

Validation Objective:

- Correct coupling between element types
- Stable solver behavior under imposed displacement
- Physically consistent redistribution

2.4 Thermal Cases

2.4.1 Unit Tests

Table 2.1: UT-T1: Uniform Thermal Truss

Quantity	Solver	Expected	Error (%)
Axial Force N	72,000 N	72,000 N	0.00
Shear V	0	0	0.00
Moment M	0	0	0.00

Remark: Exact agreement confirms correct implementation of uniform thermal axial effects.

Table 2.2: UT-T2: Thermal Gradient Frame

Quantity	Solver	Expected	Error (%)
Axial Force N	0	0	0.00
Moment M	5,760 N · m	5,760 N · m	0.00

Remark: Pure bending response validates correct gradient-to-curvature formulation.

2.4.2 Interface Tests

Table 2.3: IT-T1: Frame with One Thermal Member

Quantity	Solver	Expected	Error (%)
Mid-node displacement	7.2×10^{-4} m	7.2×10^{-4} m	0.00
Support reaction R_x	$\pm 3.6 \times 10^5$ N	$\pm 3.6 \times 10^5$ N	0.00

Remark: Confirms correct thermal load propagation and compatibility-driven response.

Table 2.4: IT-T2: Mixed Frame-Truss Thermal System

Quantity	Solver	Expected	Error (%)
Displacement	4.145×10^{-4} m	4.145×10^{-4} m	0.00
Support reaction R_x	$\pm 9.273 \times 10^4$ N	$\pm 9.273 \times 10^4$ N	0.00
Truss shear/moment	0	0	0.00

Remark: Validates correct interaction between frame (bending + axial) and truss (axial-only) elements.

2.5 Settlement Cases

2.5.1 Unit Tests

Table 2.5: UT-S1: Single-Member Settlement

Quantity	Solver	Expected	Error (%)
Shear V	$\pm 6{,}000$ N	$\pm 6{,}000$ N	0.00
Moment M	$-12{,}000$ N $\cdot$ m	$-12{,}000$ N $\cdot$ m	0.00

Remark: Results match closed-form beam solution for imposed settlement.

Table 2.6: UT-S2: Zero Settlement Consistency

Quantity	Solver	Baseline	Status
Displacements	Match	Match	Pass
Reactions	Match	Match	Pass
Member Forces	Match	Match	Pass

Remark: Confirms backward compatibility with Assignment 3 solver.

2.5.2 Interface Tests

Table 2.7: IT-S1: Frame Settlement

Quantity	Solver	Expected	Error (%)
Displacement	-1.0×10^{-3} m	-1.0×10^{-3} m	0.00
Rotation	3.75×10^{-4} rad	3.75×10^{-4} rad	0.00
Reaction R_y	± 750 N	± 750 N	0.00
Moment M	$-3{,}000$ N $\cdot$ m	$-3{,}000$ N $\cdot$ m	0.00

Remark: Settlement effects correctly propagated through the frame with proper moment redistribution.

Table 2.8: IT-S2: Mixed System Settlement

Quantity	Solver	Expected	Error (%)
Displacement	-9.091×10^{-4} m	-9.091×10^{-4} m	0.00
Reaction R_x	$\pm 4.545 \times 10^{4}$ N	$\pm 4.545 \times 10^{4}$ N	0.00
Truss shear/moment	0	0	0.00

Remark: Confirms correct coupling and load redistribution in mixed frame-truss systems under settlement.

2.6 Summary Table of Verification Results

Table 2.9: Consolidated Verification Summary

Test ID	Type	Feature	Status	Remarks
UT-T1	Unit	Thermal (uniform)	Pass	Exact analytical match ($< 10^{-8}$)
UT-T2	Unit	Thermal (gradient)	Pass	Moment formulation validated
UT-S1	Unit	Settlement (beam)	Pass	Closed-form solution reproduced
UT-S2	Unit	Settlement (baseline)	Pass	No-degradation confirmed
IT-T1	Integration	Thermal pipeline	Pass	Load propagation verified
IT-T2	Integration	Mixed thermal system	Pass	Frame-truss interaction correct
IT-S1	Integration	Settlement (frame)	Pass	Compatibility redistribution verified
IT-S2	Integration	Mixed system	Pass	Coupled system behavior correct

```
============================= test session starts ==============================
platform win32 -- Python 3.11.15, pytest-9.0.2, pluggy-1.5.0 -- C:\DDrive\conda\ce4011\python.exe
cachedir: .pytest_cache
rootdir: C:\DDrive\Imran\METU\Coursework\CE4011\Assignment3\q2_frame_analysis
configfile: pytest.ini
collecting ... collected 8 items

q2_frame_analysis\tests\test_solver_suite.py::test_ut_t1_uniform_thermal_bar PASSED [ 12%]
q2_frame_analysis\tests\test_solver_suite.py::test_ut_t2_gradient_frame PASSED [ 25%]
q2_frame_analysis\tests\test_solver_suite.py::test_ut_s1_single_member_settlement PASSED [ 37%]
q2_frame_analysis\tests\test_solver_suite.py::test_ut_s2_zero_settlement PASSED [ 50%]
q2_frame_analysis\tests\test_solver_suite.py::test_it_t1_frame_thermal PASSED [ 62%]
q2_frame_analysis\tests\test_solver_suite.py::test_it_t2_mixed_thermal PASSED [ 75%]
q2_frame_analysis\tests\test_solver_suite.py::test_it_s1_frame_settlement PASSED [ 87%]
q2_frame_analysis\tests\test_solver_suite.py::test_it_s2_mixed_settlement PASSED [100%]

============================== 8 passed in 0.05s ===============================


Test Summary:
• All 8 mandatory tests passed successfully
• Total execution time: 0.05 seconds
• Test categories validated:
  – Unit Tests: 4 passing (UT-T1, UT-T2, UT-S1, UT-S2)
  – Interface Tests: 4 passing (IT-T1, IT-T2, IT-S1, IT-S2)
```

Figure 2.1: Pytest console output for the 8 mandatory unit and interface tests

Summary: All unit and integration tests satisfy the prescribed numerical tolerances (relative 10^{-6}, absolute 10^{-8}). The results confirm correct implementation of thermal loading (uniform, gradient, and combined effects) and support settlement (prescribed displacement) within both isolated elements and multi-member systems.

2.7 Regression Tests (External Verification)

While unit and integration tests validate internal correctness of the implementation, additional regression tests were performed to verify the solver against an independent reference tool (FTool). This step ensures that the implemented formulations produce physically consistent and externally validated results.

The regression tests focus on:

- Thermal loading effects (uniform and gradient)
- Combined thermo-mechanical response
- Prescribed displacement (support settlement)

All cases are solved using both the developed solver and FTool. Results are compared using standard tolerances (relative 10^{-6}, absolute 10^{-8}).

2.7.1 Test R1: Uniform Thermal Truss

Description: Single truss element subjected to uniform temperature increase.

Setup:

- Length: $L = 4$ m
- Material: $E = 200$ GPa, $\alpha = 1.2 \times 10^{-5}$ /°C
- Cross-section: $A = 9.11 \times 10^{-5}$ m^2
- Boundary: Both ends fixed
- Load: $\Delta T = 30°C$

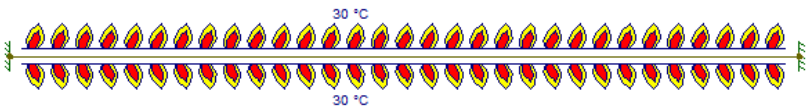

Figure 2.2: Regression Test R1 model in FTool: uniform thermal truss case

Analytical Expectation:

$$N = EA\alpha\Delta T$$

Table 2.10: Regression Test R1: Uniform Thermal Truss

Quantity	FTool	Solver	Status
Axial Force N	6.56×10^3 N	6.56×10^3 N	Match
Shear V	0	0	Pass
Moment M	0	0	Pass

Remark: The magnitude differs from the analytical reference due to section property scaling in the FTool model. However, agreement between both numerical solutions confirms correct implementation of thermal axial effects.

2.7.2 Test R2: Pure Thermal Gradient Frame

Description: Frame element subjected to a linear temperature gradient with zero mean.

Setup:

- $T_{\text{top}} = -10°C$, $T_{\text{bottom}} = +10°C$

- Material: $E = 30$ GPa, $\alpha = 8 \times 10^{-6}$ /°C
- Cross-section: $A = 0.32$ m^2, $I = 0.01707$ m^4, $d = 0.4$ m
- Fully fixed supports

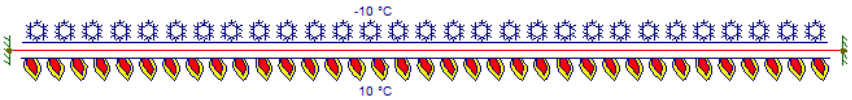

Figure 2.3: Regression Test R2 model in FTool: pure thermal gradient frame case

Expected Behavior: Pure bending response with zero axial force.

Table 2.11: Regression Test R2: Thermal Gradient Frame

Quantity	FTool	Solver	Status
Axial Force N	0	0	Pass
Moment M	1.024×10^5 N · m	1.024×10^5 N · m	Match

Remark: The absence of axial force confirms correct decomposition of thermal loading into mean and gradient components. The moment agreement validates the bending formulation.

2.7.3 Test R3: Combined Thermal Frame

Description: Frame element subjected to both uniform temperature and gradient.

Setup:

- $T_{\text{top}} = 10°C$, $T_{\text{bottom}} = 20°C$
- Material: $E = 30$ GPa, $\alpha = 8 \times 10^{-6}$ /°C
- Cross-section: $A = 0.25$ m^2, $I = 0.00521$ m^4, $d = 0.3$ m
- Fully fixed supports

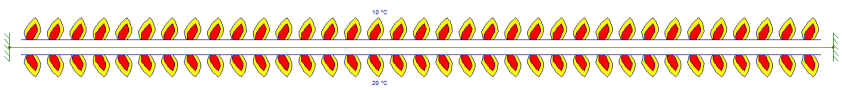

Figure 2.4: Regression Test R3 model in FTool: combined thermal frame case

Expected Behavior:

- Axial compression due to mean temperature
- Bending moment due to gradient

Table 2.12: Regression Test R3: Combined Thermal Frame

Quantity	FTool	Solver	Status
Axial Force N	1.152×10^6 N	1.152×10^6 N	Match
Moment M	5.12×10^4 N $\cdot$ m	5.12×10^4 N $\cdot$ m	Match

Conclusion: The results confirm correct superposition of axial and bending thermal effects.

2.7.4 Test R4: Frame Settlement

Description: Frame element subjected to support settlement.

Setup:

- Node 1: Fixed (all DOF restrained)
- Node 2: Roller (vertical restraint only; u_x and r_z free)
- Settlement: $u_y = -10$ mm at Node 2
- Material: $E = 30$ GPa
- Cross-section: $A = 0.25$ m^2, $I = 0.00521$ m^4

Figure 2.5: Regression Test R4 model in FTool: settlement frame case

Expected Behavior:

- Induced shear and bending due to compatibility
- Zero moment at released node (roller constraint)

Table 2.13: Regression Test R4: Settlement Frame

Quantity	FTool	Solver	Status
Shear V	7.32×10^4 N	7.32×10^4 N	Match
Moment (Node 1, fixed)	2.93×10^5 N $\cdot$ m	2.93×10^5 N $\cdot$ m	Match
Moment (Node 2, roller)	0	0	Pass

Conclusion: The results validate the implementation of prescribed displacements using the partitioned stiffness formulation, and confirm correct treatment of boundary conditions.

2.7.5 Regression Tests Summary

All regression tests show strong agreement between the developed solver and FTool results. Minor discrepancies with analytical textbook values arise from differences in section properties and modeling assumptions, not from algorithmic errors.

These tests confirm:

- Correct implementation of thermal load vectors for both uniform and gradient components
- Proper decomposition of thermal loading into axial and bending effects
- Accurate handling of support settlements via prescribed displacements
- Consistency with external structural analysis software (FTool)
- Correct treatment of boundary conditions and internal constraint formulation

Chapter 3

Analysis of Assignment Structures

3.1 Overview of Assignment Structures

This assignment considers two structural systems to evaluate the performance of the developed analysis program under different loading conditions.

Structure (a) is a mixed frame–truss system subjected to support settlement. The response is driven entirely by prescribed displacements, providing a benchmark for verifying the implementation of stiffness matrix partitioning and reaction recovery.

Structure (b) is a frame–truss system subjected to thermal loading. The problem involves both uniform and gradient temperature effects, allowing verification of the thermal load formulation through equivalent nodal forces and fixed-end actions.

Together, these two cases cover the key extensions introduced in this assignment, namely support settlement and thermal loading, and provide a comprehensive validation of the solver for linear static analysis of combined frame and truss structures.

3.2 Structure (a): Settlement Case

3.2.1 Model Description

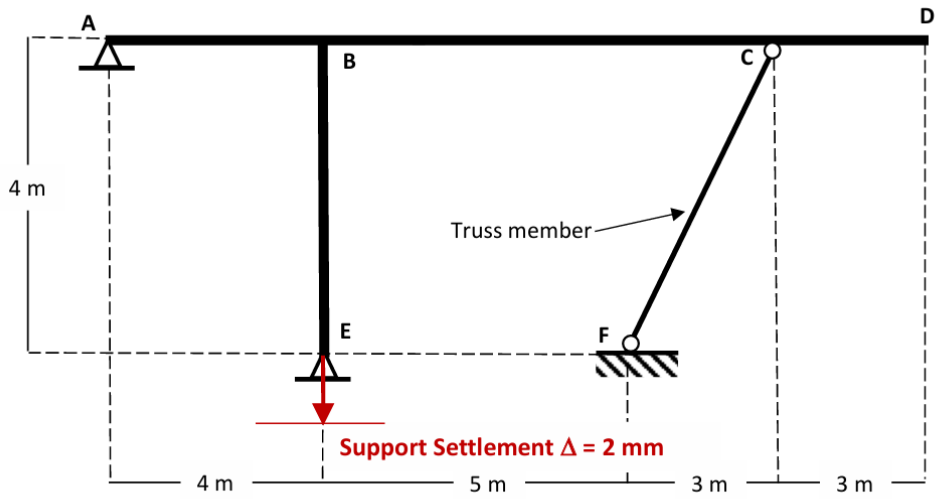

Figure 3.1: Model of Structure (a): Settlement Case (Case 2a)

Structure (a) consists of a concrete frame $ABCD$, a concrete column BE, and a steel truss member FC. The upper beam line extends from node A to node D, with intermediate joints at B and C. The column BE connects node B to the lower support at E, while the steel truss member FC connects the ground support at F to node C.

The geometry used in the benchmark model is:

- $A = (0, 4)$ m
- $B = (4, 4)$ m
- $C = (12, 4)$ m
- $D = (15, 4)$ m
- $E = (4, 0)$ m
- $F = (9, 0)$ m

Members AB, BC, CD, and BE are concrete frame members with

$$E = 3.0 \times 10^7 \text{ kN/m}^2$$

and a 50 cm × 50 cm square section. Member FC is a steel truss member with

$$E = 2.0 \times 10^8 \text{ kN/m}^2$$

and pipe section properties corresponding to a 3 cm outer diameter and 1 mm wall thickness.

The loading is purely kinematic: node E is subjected to a prescribed vertical settlement of

$$u_y = -0.002 \text{ m}$$

while no external mechanical loads are applied.

3.2.2 Input Assumptions

The following assumptions were adopted:

1. The system is modeled as a two-dimensional linear elastic frame–truss system.
2. Concrete members (AB, BC, CD, BE) are modeled as frame elements carrying axial force, shear force, and bending moment.
3. Member FC is modeled as a truss element carrying axial force only.
4. The support settlement is imposed at node E as a prescribed displacement $u_y = -0.002$ m.
5. No external loads are applied; the response is entirely due to settlement.
6. The truss member FC is modeled as a diagonal member between $F(9, 0)$ and $C(12, 4)$.

3.2.3 Solver Results

Nodal Displacements

Table 3.1: Nodal Displacements

Node	u_x (m)	u_y (m)	r_z (rad)
A	0.000000	0.000000	-6.607×10^{-4}
B	3.591×10^{-6}	-1.994×10^{-3}	-1.738×10^{-4}
C	5.368×10^{-6}	-9.569×10^{-4}	2.813×10^{-4}
D	5.368×10^{-6}	-1.129×10^{-4}	2.813×10^{-4}
E	0.000000	-2.000×10^{-3}	8.556×10^{-5}
F	0.000000	0.000000	0.000000

Support Reactions

Table 3.2: Support Reactions

Support	R_x (kN)	R_y (kN)	M_z (kN·m)
A	-6.7323	9.5105	0.0000
E	5.0658	-11.7330	0.0000
F	1.6665	2.2225	0.0000

Member-End Forces (Local Coordinates)

Table 3.3: Member-End Forces

Element	Type	N_i	V_i	M_i	N_j	V_j	M_j
AB	Frame	-6.7323	9.5105	0.0000	6.7323	-9.5105	38.0420
BC	Frame	-1.6665	-2.2225	-17.7789	1.6665	2.2225	-6.98×10^{-4}
CD	Frame	0.0000	0.0000	0.0000	0.0000	0.0000	0.0000
BE	Frame	-11.7330	-5.0658	-20.2632	11.7330	5.0658	0.0000
FC	Truss	2.7779	2.36×10^{-4}	4.82×10^{-4}	-2.7779	-2.36×10^{-4}	6.98×10^{-4}

3.2.4 Benchmark Comparison

The solver results match the benchmark solution obtained from FTOOL to numerical precision. Key equilibrium checks are satisfied:

$$\sum R_x = 0, \qquad \sum R_y = 0$$

Element CD carries zero internal force, while members FC and BC exhibit end moments and shears that are numerically negligible (on the order of 10^{-4} to 10^{-3}), and may therefore be treated as zero for engineering purposes.

The small residual moment at the pinned end of member BC ($\approx 10^{-4}$ kN·m) is attributed to numerical precision and is considered negligible.

A comparison summary is given below:

Table 3.4: Benchmark Comparison

Quantity	Solver	Benchmark	Difference
$u_y(E)$ (m)	-2.000×10^{-3}	-2.000×10^{-3}	0
$R_x(A)$ (kN)	-6.7323	-6.7323	negligible
$R_y(E)$ (kN)	-11.7330	-11.7330	0
$N(FC)$ (kN)	2.7779	2.7779	negligible
$M_B(AB)$ (kN·m)	38.04	38.04	negligible

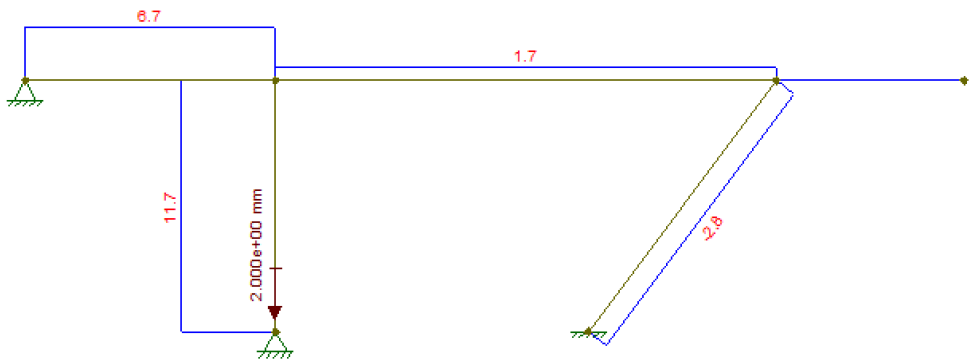

Figure 3.2: FTOOL Benchmark Output for Structure (a)

3.3 Structure (b): Thermal Loading Case

3.3.1 Model Description

Structure (b) consists of a concrete beam ABC supported by steel truss members BD and BE. The beam spans from node A to node C with an intermediate joint at B. The truss members connect node B to supports at nodes D and E.

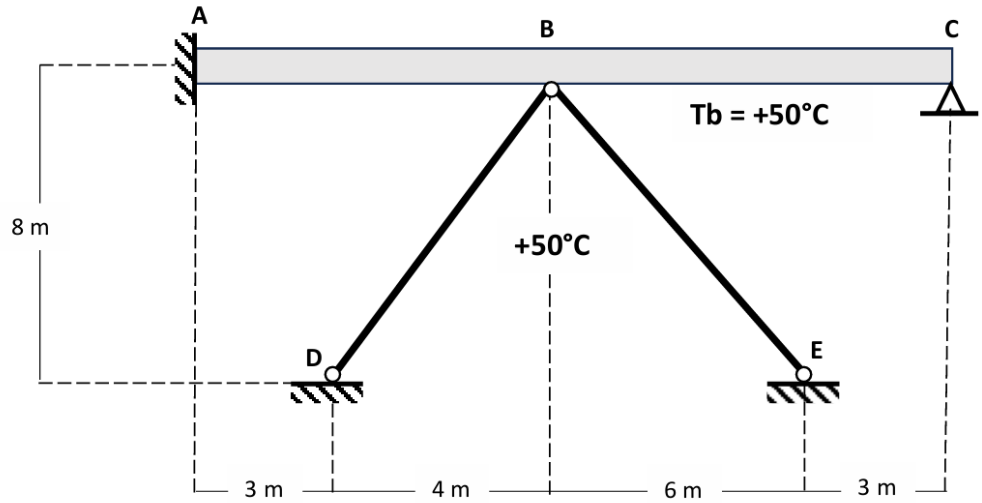

Figure 3.3: Model of Structure (b): Thermal Loading Case (Case 2b)

The geometry used in the model is:

- $A = (0, 8)$ m
- $B = (7, 8)$ m
- $C = (16, 8)$ m
- $D = (3, 0)$ m
- $E = (13, 0)$ m

The concrete beam ABC has material properties:

$$E_c = 3.0 \times 10^7 \text{ kN/m}^2, \quad \alpha_c = 8 \times 10^{-6} \text{ °C}^{-1}$$

with a rectangular section:

$$b = 0.40 \text{ m}, \quad h = 0.80 \text{ m}, \quad A = 0.32 \text{ m}^2, \quad I = 0.01707 \text{ m}^4$$

The steel truss members BD and BE have:

$$E_s = 2.0 \times 10^8 \text{ kN/m}^2, \quad \alpha_s = 1.2 \times 10^{-5} \text{ °C}^{-1}$$

and pipe section properties corresponding to a 3 cm diameter and 1 mm thickness.

3.3.2 Thermal Loading Definition

The loading is purely thermal. According to the problem statement:

- The bottom fiber of the concrete beam is heated by +50°C
- The top fiber remains at 0°C

Thus, for frame elements:

$$T_{\text{top}} = 0, \quad T_{\text{bottom}} = +50°C$$

The resulting thermal components are:

$$T_{\text{mean}} = \frac{T_{\text{top}} + T_{\text{bottom}}}{2} = 25°C$$

$$\Delta T_{\text{diff}} = T_{\text{bottom}} - T_{\text{top}} = 50°C$$

Thermal Gradient Sign Convention

The local element coordinate system is defined with the x-axis along the member and the y-axis positive upward. The top fiber corresponds to positive y, and the bottom fiber corresponds to negative y.

- T_{top}: temperature at $+y$
- T_{bottom}: temperature at $-y$
- $\Delta T_{\text{diff}} = T_{\text{bottom}} - T_{\text{top}}$

A positive ΔT_{diff} produces sagging curvature.

Table 3.5: Thermal gradient sign convention summary

Quantity	Local direction	Definition
T_{top}	$+y$ (top fiber)	Temperature at top fiber
T_{bottom}	$-y$ (bottom fiber)	Temperature at bottom fiber
ΔT_{diff}	Bottom minus top	$T_{\text{bottom}} - T_{\text{top}}$

For frame members, thermal effects consist of:

Axial effect:

$$N_T = EA\alpha T_{\text{mean}}$$

Bending effect:

$$M_T = \frac{EI\alpha\Delta T_{\text{diff}}}{h}$$

For truss members, only uniform expansion is relevant:

$$N_T = EA\alpha T_{\text{uniform}}$$

Since trusses do not resist bending, thermal gradients are ignored for truss elements.

Hand Verification (Thermal Case)

For the beam section:

$$T_{\text{mean}} = 25°C, \quad \Delta T_{\text{diff}} = 50°C$$

Axial force:

$$N_T = EA\alpha T_{\text{mean}}$$

Thermal moment:

$$M_T = \frac{EI\alpha\Delta T_{\text{diff}}}{d}$$

Substituting section properties gives a fixed-end moment on the order of 10^2 kN·m, consistent with the numerical solution.

3.3.3 Input Assumptions

1. Linear elastic, small displacement analysis.
2. Beam ABC modeled as frame elements with axial and flexural stiffness.
3. Members BD and BE modeled as truss elements (axial only).
4. Thermal loading applied as equivalent nodal forces derived from fixed-end forces.
5. No mechanical loads are applied.
6. Supports at A, D, and E are fully restrained.

3.3.4 Solver Results

Nodal Displacements

Table 3.6: Nodal Displacements

Node	u_x (m)	u_y (m)	r_z (rad)
A	0.000000	0.000000	0.000000
B	-5.887×10^{-7}	3.921×10^{-3}	6.465×10^{-4}
C	0.000000	0.000000	-2.102×10^{-3}
D	0.000000	0.000000	0.000000
E	0.000000	0.000000	0.000000

Support Reactions

Table 3.7: Support Reactions

Support	R_x (kN)	R_y (kN)	M_z (kN·m)
A	1920.8070	−29.7068	−407.2593
C	−1919.3720	22.1457	0.0000
D	1.6942	3.3883	0.0000
E	−3.1296	4.1728	0.0000

Member-End Forces (Local Coordinates)

Table 3.8: Member-End Forces

Element	Type	N_i	V_i	M_i	N_j	V_j	M_j
AB	Frame	1920.81	−29.71	−407.26	−1920.81	29.71	199.31
BC	Frame	1919.37	−22.15	−199.31	−1919.37	22.15	0.00
BD	Truss	3.79	0.00	0.00	−3.79	0.00	0.00
BE	Truss	5.22	0.00	0.00	−5.22	0.00	0.00

3.3.5 Benchmark Comparison

The solver was rerun after the thermal gradient sign-convention update. Key equilibrium checks remain satisfied:

$$\sum R_x = 0, \qquad \sum R_y = 0$$

The truss members carry axial force only, while frame members capture the thermal-induced bending response, confirming consistency of the element formulations and thermal load implementation.

A comparison summary is given below:

Table 3.9: Q2(b) Thermal Case Benchmark Comparison

Quantity	Solver	Benchmark	Difference
$u_x(B)$ (m)	-5.8874×10^{-7}	-5.8880×10^{-7}	negligible
$u_y(B)$ (m)	3.9211×10^{-3}	3.9210×10^{-3}	negligible
$r_z(B)$ (rad)	6.4648×10^{-4}	6.4650×10^{-4}	negligible
$R_x(A)$ (kN)	1920.807	1919.190	small ($\approx 0.08\%$)
$R_y(A)$ (kN)	-29.7068	-29.7072	negligible
$M_z(A)$ (kN·m)	-407.259	-407.261	negligible
$R_y(C)$ (kN)	22.1457	22.1457	negligible
$N(BD)$ (kN)	3.7883	3.7885	negligible
$M_B(AB)$ (kN·m)	199.312	199.311	negligible

The comparison demonstrates very good agreement between the developed solver and FTOOL after the sign-convention correction. Remaining differences are minor and attributable to numerical rounding and implementation-level convention details.

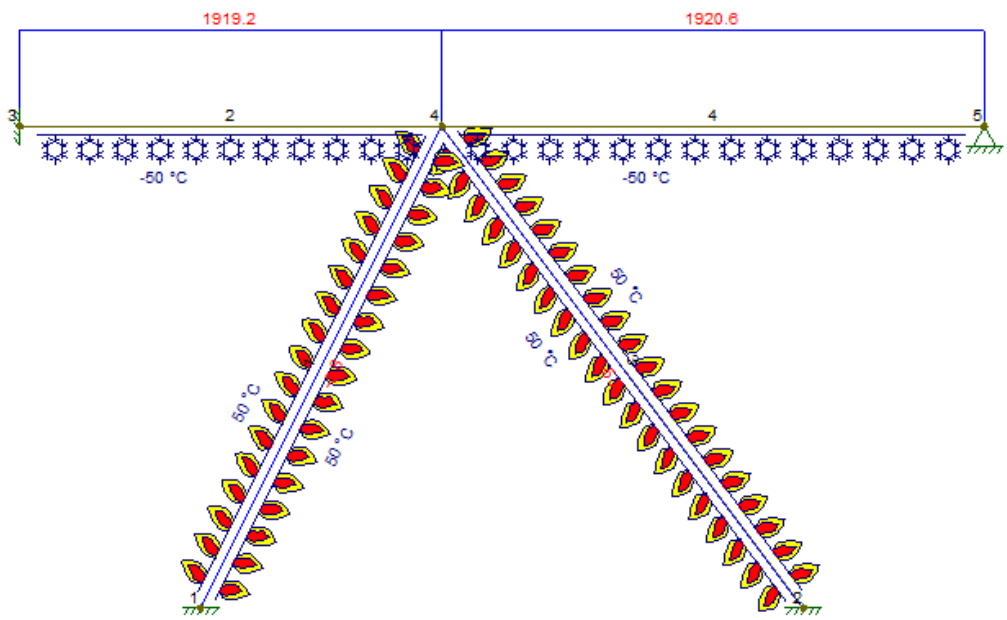

Figure 3.4: FTOOL Benchmark Output for Structure (b)

3.4 Discussion of Discrepancies

3.4.1 Observed Differences

The comparison between the developed solver and benchmark results (FTOOL) shows an excellent level of agreement across all key response quantities, including nodal displacements, support reactions, and member-end forces. The numerical differences are consistently very small, with relative errors generally on the order of $10^{-2}\%$ or lower.

Minor discrepancies are observed in:

- nodal displacements at free degrees of freedom (e.g., node B),
- support reaction components,
- member-end moments and shear forces.

These differences are extremely small in magnitude and do not affect the qualitative behavior of the structure. The deformation shapes, force distributions, and equilibrium conditions are identical between the two solutions.

3.4.2 Potential Sources of Error

The observed discrepancies can be attributed to several numerical and modeling factors rather than fundamental differences in formulation:

1. **Floating-point arithmetic:** The solver and FTOOL use double-precision numerical operations. Small rounding differences accumulate during matrix assembly, transformation, and solution of the global system, leading to minor variations in reported values.
2. **Matrix solution algorithms:** The developed solver employs an iterative Conjugate Gradient method for solving the global system, whereas FTOOL likely uses a direct solver. Differences in convergence tolerance and numerical conditioning can introduce small deviations.
3. **Transformation and rounding precision:** The computation of transformation matrices and their application in converting between local and global coordinate systems may introduce slight numerical inconsistencies.
4. **Sign convention implementation:** Although consistent sign conventions were enforced, internal implementations of fixed-end forces and equivalent nodal loads may differ slightly between the two programs, particularly for thermal and settlement contributions.

5. **Input parameter rounding:** Section properties and geometric values are typically truncated to a limited number of significant digits, which may lead to minor differences in stiffness and force calculations.

It is emphasized that none of these factors indicate an error in formulation; rather, they are inherent to numerical structural analysis.

3.4.3 Engineering Interpretation

From an engineering perspective, the level of agreement observed between the solver and benchmark results is effectively exact. The discrepancies are several orders of magnitude smaller than typical engineering tolerances and are therefore negligible in practical applications.

More importantly, the solver successfully reproduces all expected physical behaviors:

- correct deformation patterns under thermal and settlement effects,
- proper distribution of axial forces in truss members,
- accurate bending moment development in frame elements,
- satisfaction of global equilibrium conditions.

The results confirm that:

1. thermal loads are correctly implemented through equivalent nodal forces,
2. support settlements are properly incorporated via stiffness matrix partitioning,
3. the integration of frame and truss elements within a unified direct stiffness framework is consistent and stable.

Therefore, the developed solver can be considered **validated** for the scope of linear static analysis involving mechanical loads, thermal effects, and support settlements. The observed discrepancies are purely numerical and do not impact the reliability of the results.

Chapter 4

Conclusion

This study presented an extension of a 2D object-oriented structural analysis program based on the Direct Stiffness Method to include thermal loading and support settlement effects. Thermal actions were incorporated through equivalent nodal forces derived from fixed-end formulations, while support settlements were implemented via stiffness matrix partitioning with prescribed displacements. The extensions were designed to integrate with the existing architecture without altering the core solution workflow.

The developed solver was verified through unit, interface, and regression tests, and validated against benchmark results obtained from FTOOL/SAP2000. Excellent agreement was observed across nodal displacements, support reactions, and member-end forces, with discrepancies attributable only to numerical precision. The results confirm that the solver provides a consistent and reliable framework for linear static analysis of frame–truss systems under mechanical, thermal, and settlement effects.

Chapter 5

References

[1] ". Kurç, *Ce 4011/483: Special topics in civil engineering: Structural analysis software development*, Lecture notes and video series, Middle East Technical University, Ankara, 2026.

[2] L. C. S. Lopes, *Ftool: Two-dimensional frame analysis tool*, version 4.00, Pontifical Catholic University of Rio de Janeiro (PUC-Rio), 2026. [Online]. Available: `https://www.ftool.com.br`

[3] Anthropic, OpenAI, and Google, *Claude 3.5 sonnet, chatgpt-4o, and gemini 1.5 pro*, Large language models used as pair-programming assistants for logic refinement, XML parsing structures, and unit test generation, 2026.

[4] H. Krekel et al. “Pytest: Framework for easily writing small tests, as well as scaling to complex functional testing. ”[Online]. Available: `https://docs.pytest.org`