Version	Date	Sign	Release Notes
1.1	22.12.22	eugr	Rotate joystick by 45°, add level shifter
1.2	30.01.23	sczr	Beautify schematics, add missing pin 1 marker
1.3	05.04.23	sczr	Changes to PCB and component parameters

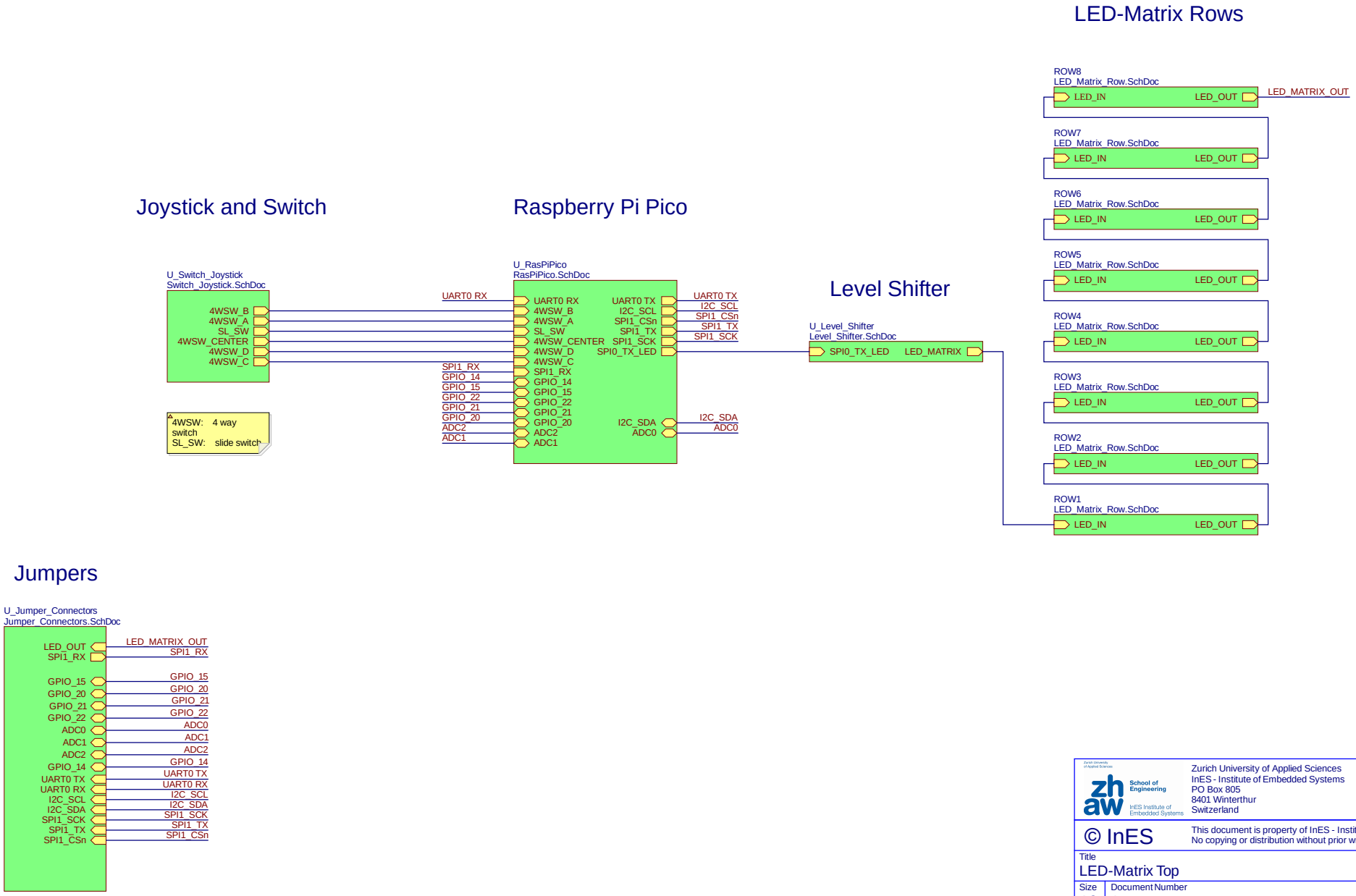

Zurich University of Applied Sciences
School of Engineering
InES Institute of Embedded Systems

Zurich University of Applied Sciences
InES - Institute of Embedded Systems
PO Box 805
8401 Winterthur
Switzerland

© InES

This document is property of InES - Institute of Embedded Systems
No copying or distribution without prior written permission of InES

Title
LED-Matrix Top

Size	Document Number	Version
A3	1	1.3

Sheet 1 of 6 | Print date: 02.05.2023 | Drawn by: Lukas Eugster

Filename: LED-Matrix_Top.SchDoc

Joystick

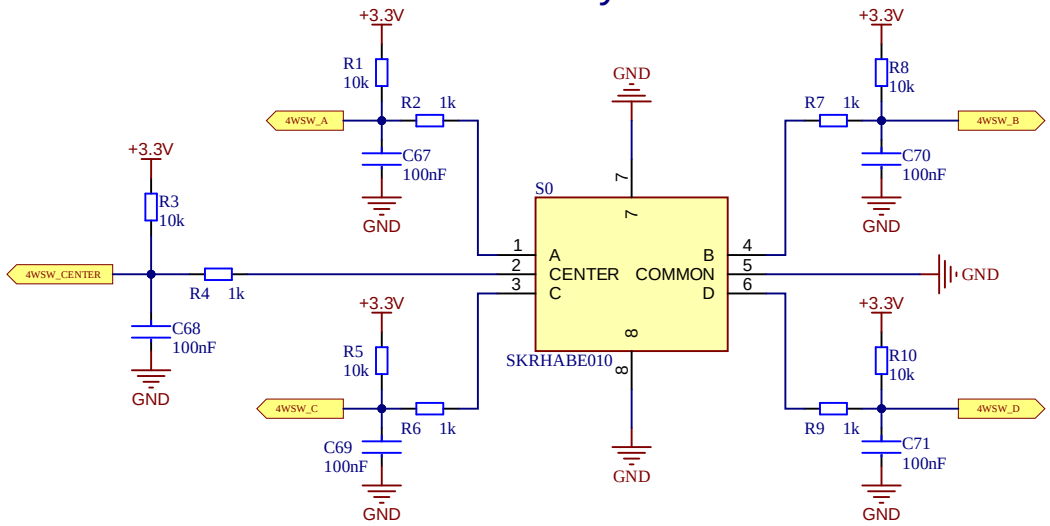

Switch

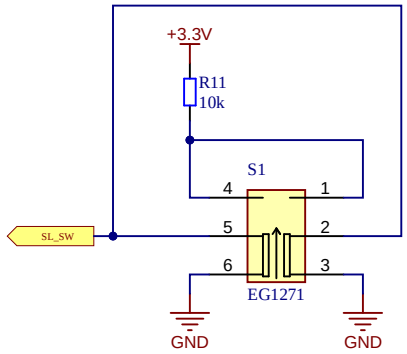

Button push is sensed by a pull to GND (logical low)
Debounce is already done in hardware with the RC filter (1k Resistor, 0.1uF Capacitor).
Together with the external 10k pullup Resistor, the 1k Resistor creates a voltatge divider. Therefore, logical low wont be 0V. The MCU interprets voltages between -0.3 and 0.8V as logial low / logical 0.

{(1kOhm)/(1kOhm+10kOhm)}*3.3V = 0.3V
This is ok for a logical low.

Zurich University of Applied Sciences
School of Engineering
InES Institute of Embedded Systems

Zurich University of Applied Sciences
InES - Institute of Embedded Systems
PO Box 805
8401 Winterthur
Switzerland

© InES
This document is property of InES - Institute of Embedded Systems
No copying or distribution without prior written permission of InES

Title
Joystick and Switch

Size	Document Number	Version
A4	2	1.3

Sheet 2 of 6 | Print date: 02.05.2023 | Drawn by: Lukas Eugster
Filename: Switch_Joystick.SchDoc

Row of 8 LED's

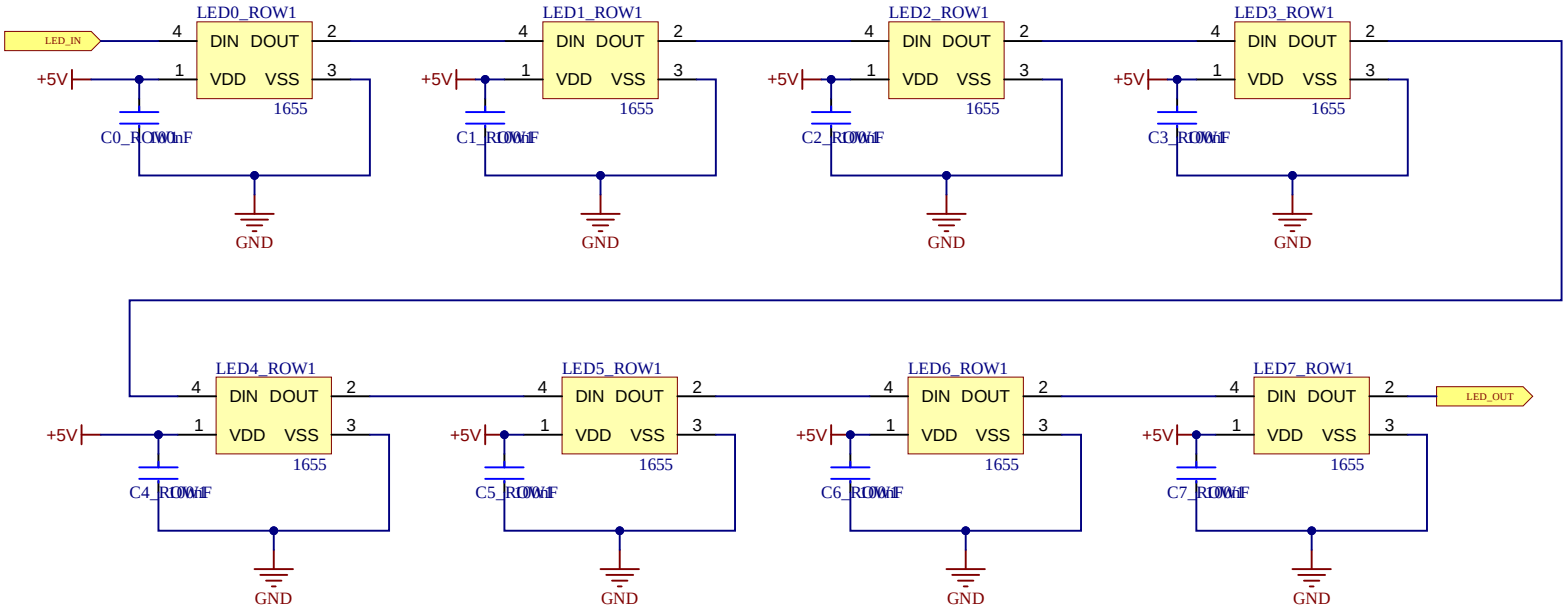

Zurich University of Applied Sciences
InES - Institute of Embedded Systems
PO Box 805
8401 Winterthur
Switzerland

© InES
This document is property of InES - Institute of Embedded Systems
No copying or distribution without prior written permission of InES

Title
LED-Matrix Row

Size	Document Number	Version
A4	3	1.3

Sheet 3 of 6 | Print date: 02.05.2023 | Drawn by: Lukas Eugster
Filename: LED_Matrix_Row.SchDoc

Row of 8 LED's

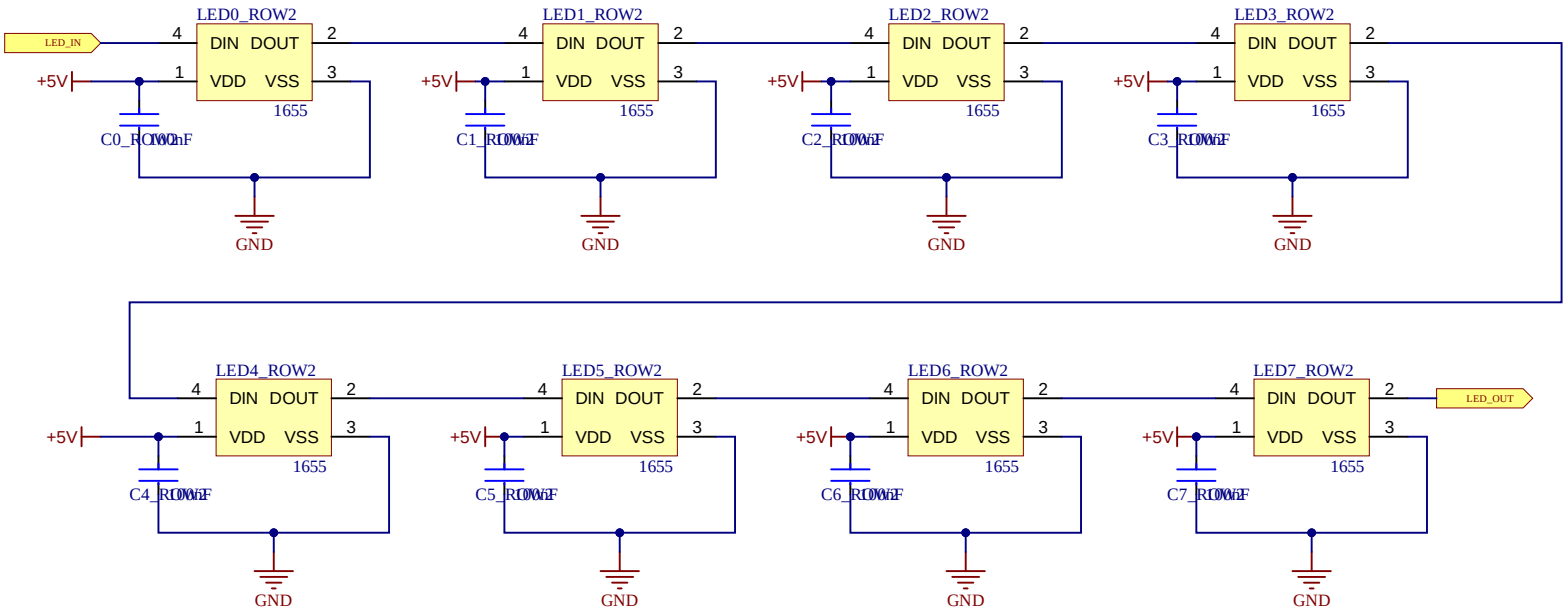

Zurich University of Applied Sciences
InES - Institute of Embedded Systems
PO Box 805
8401 Winterthur
Switzerland

© InES
This document is property of InES - Institute of Embedded Systems
No copying or distribution without prior written permission of InES

Title
LED-Matrix Row

Size	Document Number	Version
A4	3	1.3

Sheet 3 of 6 | Print date: 02.05.2023 | Drawn by: Lukas Eugster

Filename: LED_Matrix_Row.SchDoc

Row of 8 LED's

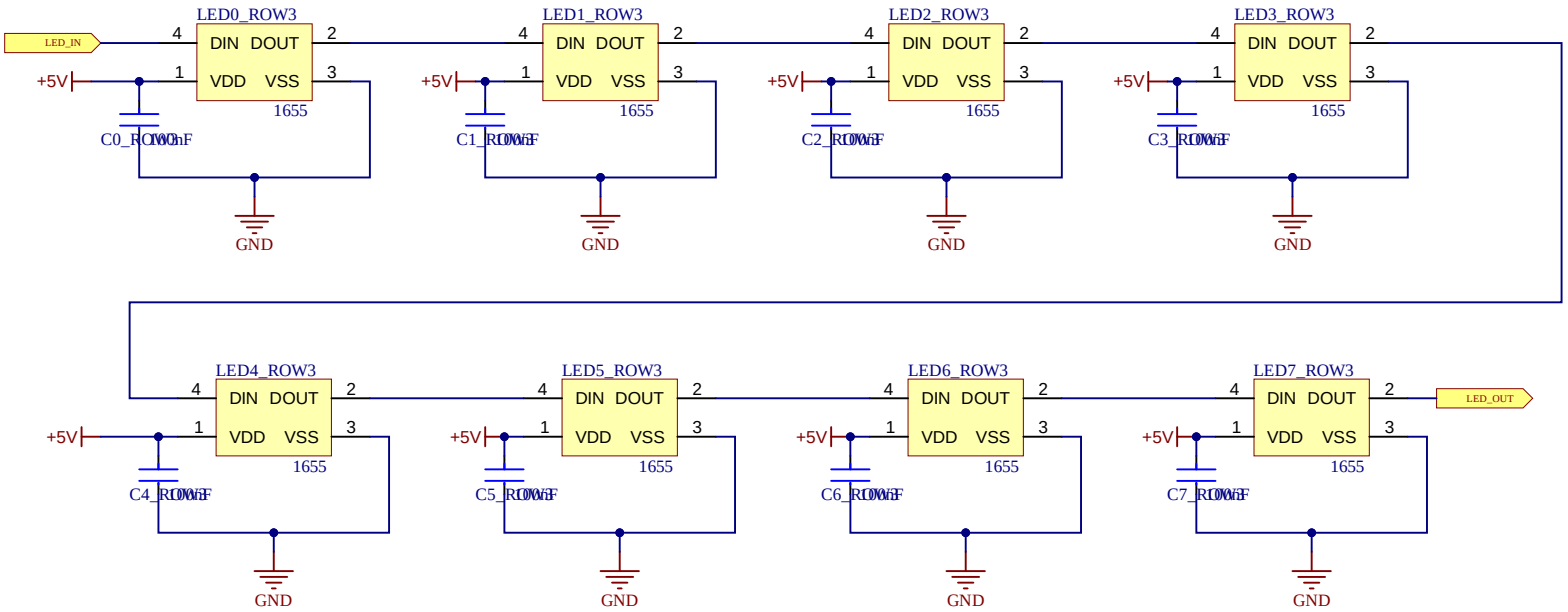

Zurich University of Applied Sciences
InES - Institute of Embedded Systems
PO Box 805
8401 Winterthur
Switzerland

© InES
This document is property of InES - Institute of Embedded Systems
No copying or distribution without prior written permission of InES

Title
LED-Matrix Row

Size	Document Number	Version
A4	3	1.3

Sheet 3 of 6 | Print date: 02.05.2023 | Drawn by: Lukas Eugster

Filename: LED_Matrix_Row.SchDoc

Row of 8 LED's

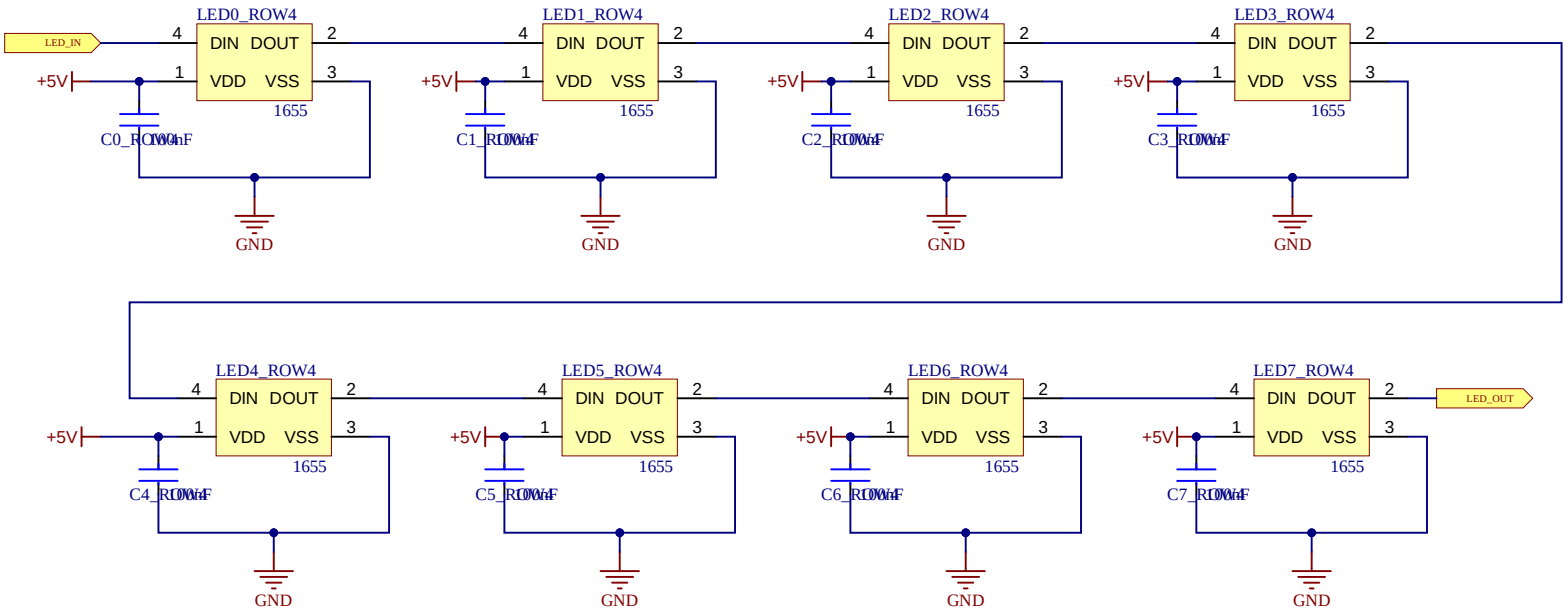

Zurich University of Applied Sciences
InES - Institute of Embedded Systems
PO Box 805
8401 Winterthur
Switzerland

© InES
This document is property of InES - Institute of Embedded Systems
No copying or distribution without prior written permission of InES

Title
LED-Matrix Row

Size	Document Number	Version
A4	3	1.3

Sheet 3 of 6 | Print date: 02.05.2023 | Drawn by: Lukas Eugster
Filename: LED_Matrix_Row.SchDoc

Row of 8 LED's

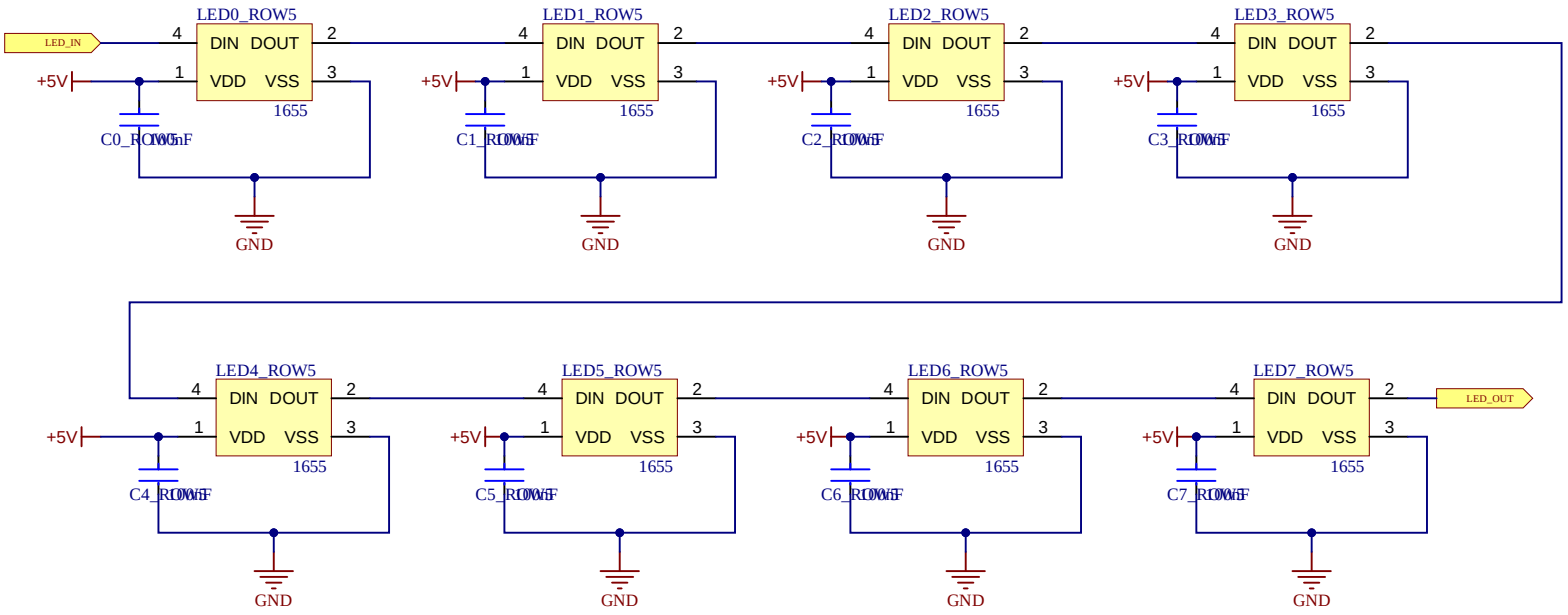

Zurich University of Applied Sciences
InES - Institute of Embedded Systems
PO Box 805
8401 Winterthur
Switzerland

© InES
This document is property of InES - Institute of Embedded Systems
No copying or distribution without prior written permission of InES

Title
LED-Matrix Row

Size	Document Number	Version
A4	3	1.3

Sheet 3 of 6 | Print date: 02.05.2023 | Drawn by: Lukas Eugster

Filename: LED_Matrix_Row.SchDoc

Row of 8 LED's

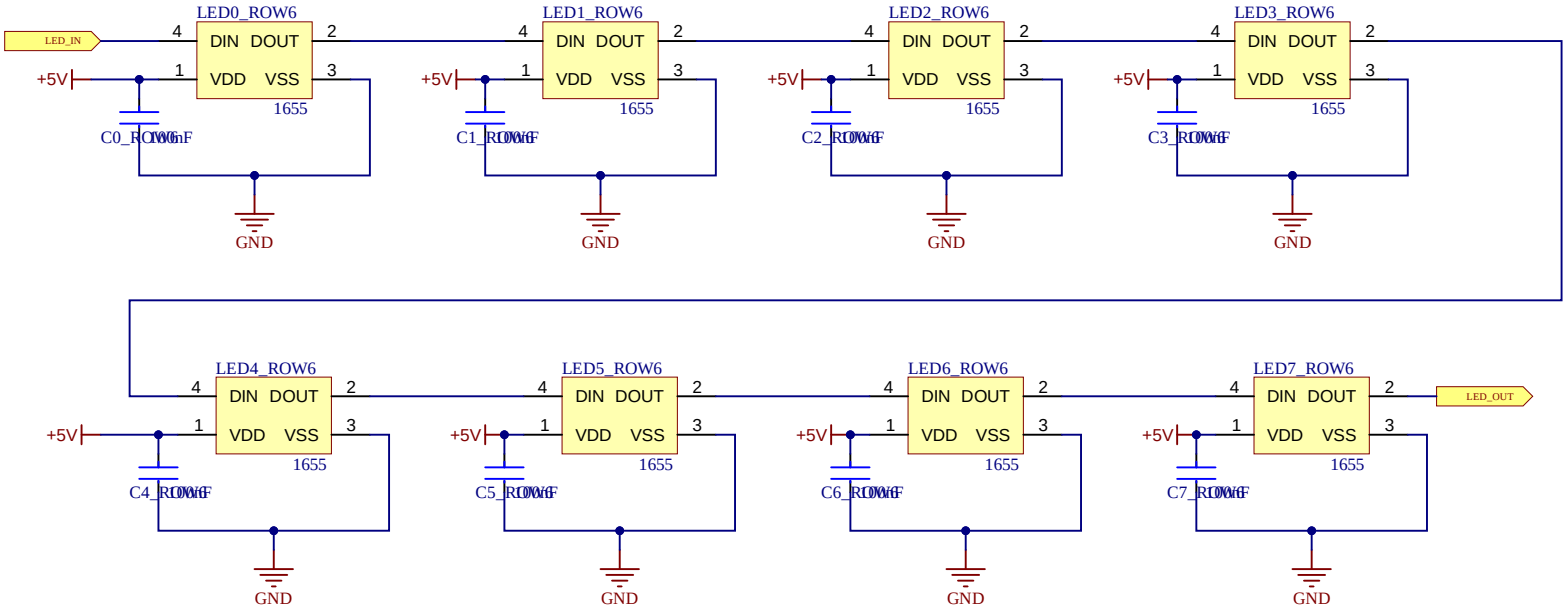

Zurich University of Applied Sciences
InES - Institute of Embedded Systems
PO Box 805
8401 Winterthur
Switzerland

© InES
This document is property of InES - Institute of Embedded Systems
No copying or distribution without prior written permission of InES

Title
LED-Matrix Row

Size	Document Number	Version
A4	3	1.3

Sheet 3 of 6 | Print date: 02.05.2023 | Drawn by: Lukas Eugster
Filename: LED_Matrix_Row.SchDoc

Row of 8 LED's

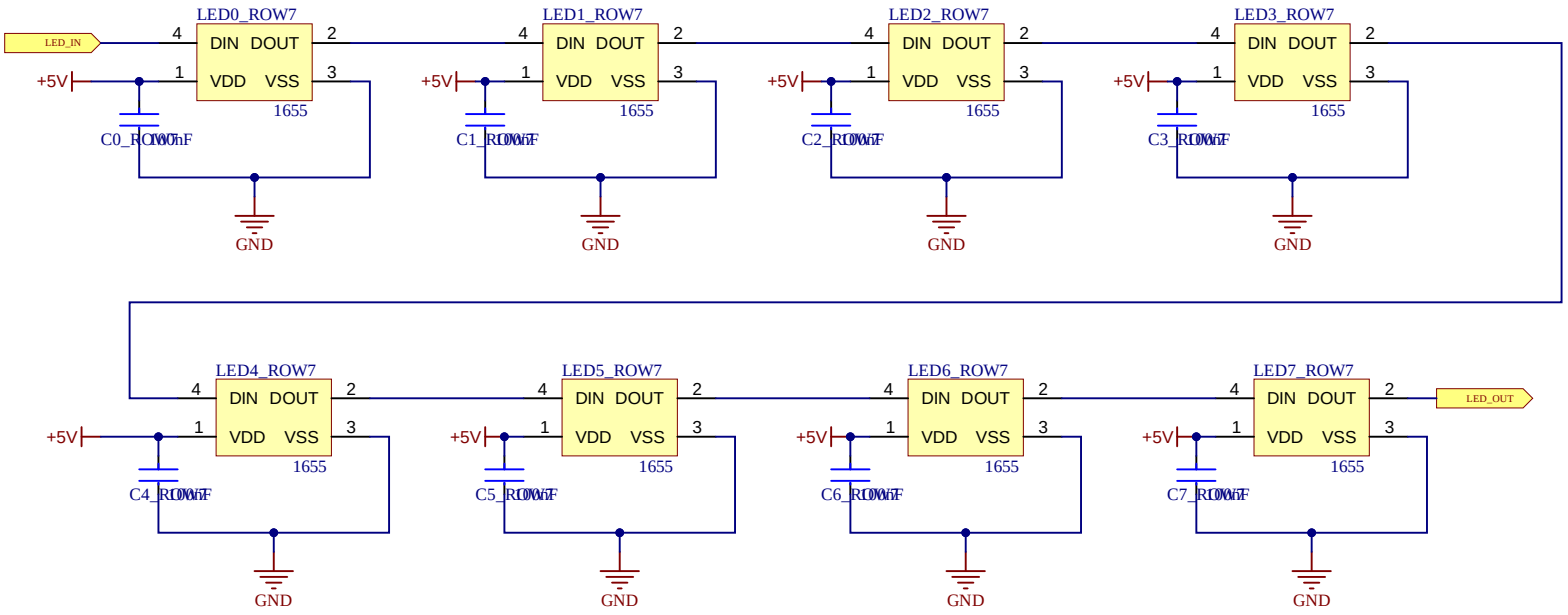

Zurich University of Applied Sciences
InES - Institute of Embedded Systems
PO Box 805
8401 Winterthur
Switzerland

© InES
This document is property of InES - Institute of Embedded Systems
No copying or distribution without prior written permission of InES

Title
LED-Matrix Row

Size	Document Number	Version
A4	3	1.3

Sheet 3 of 6 | Print date: 02.05.2023 | Drawn by: Lukas Eugster

Filename: LED_Matrix_Row.SchDoc

Row of 8 LED's

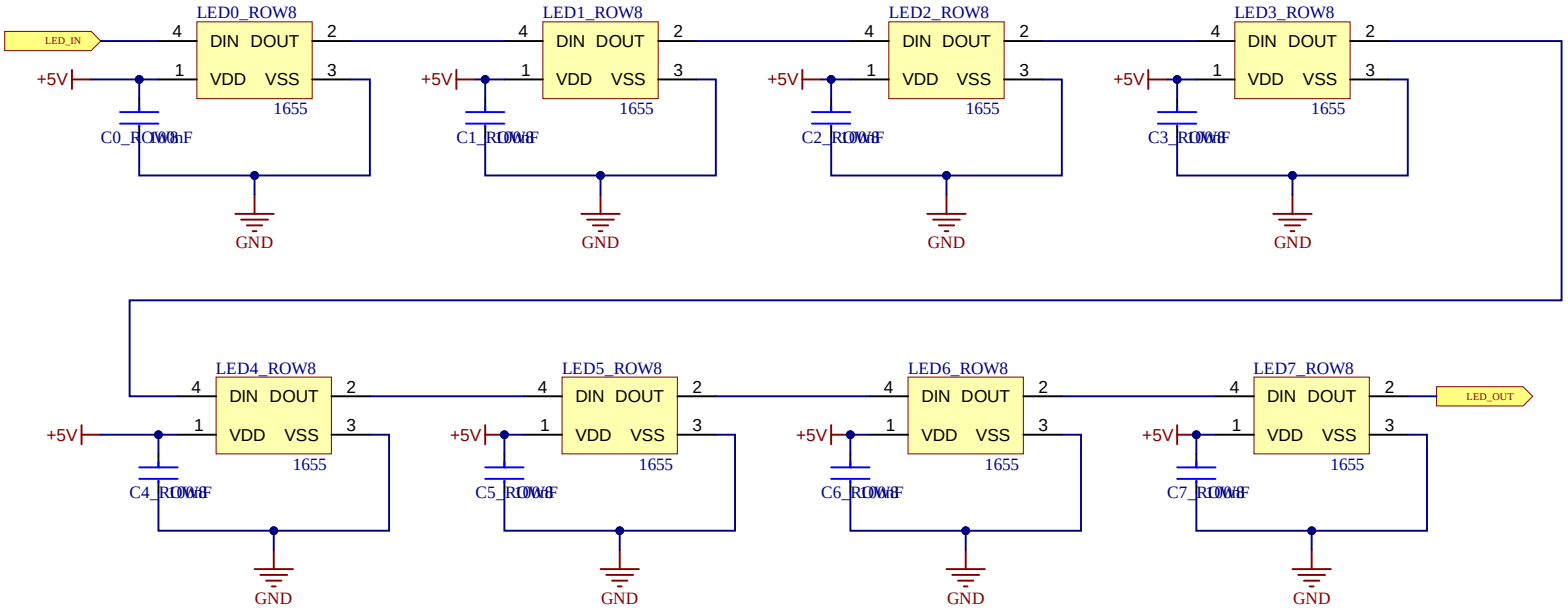

Zurich University of Applied Sciences
InES - Institute of Embedded Systems
PO Box 805
8401 Winterthur
Switzerland

© InES
This document is property of InES - Institute of Embedded Systems
No copying or distribution without prior written permission of InES

Title
LED-Matrix Row

Size	Document Number	Version
A4	3	1.3

Sheet 3 of 6 | Print date: 02.05.2023 | Drawn by: Lukas Eugster

Filename: LED_Matrix_Row.SchDoc

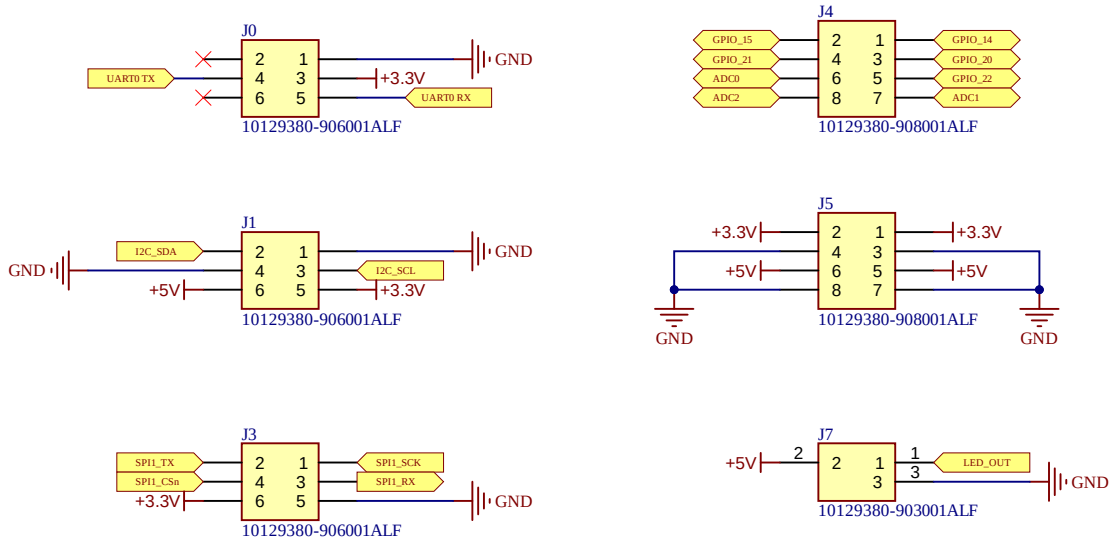

Zurich University of Applied Sciences
InES - Institute of Embedded Systems
PO Box 805
8401 Winterthur
Switzerland

© InES
This document is property of InES - Institute of Embedded Systems
No copying or distribution without prior written permission of InES

Title
Jumper Connectors

Size	Document Number	Version
A4	4	1.3

Sheet 4 of 6 | Print date: 02.05.2023 | Drawn by: Lukas Eugster
Filename: Jumper_Connectors.SchDoc

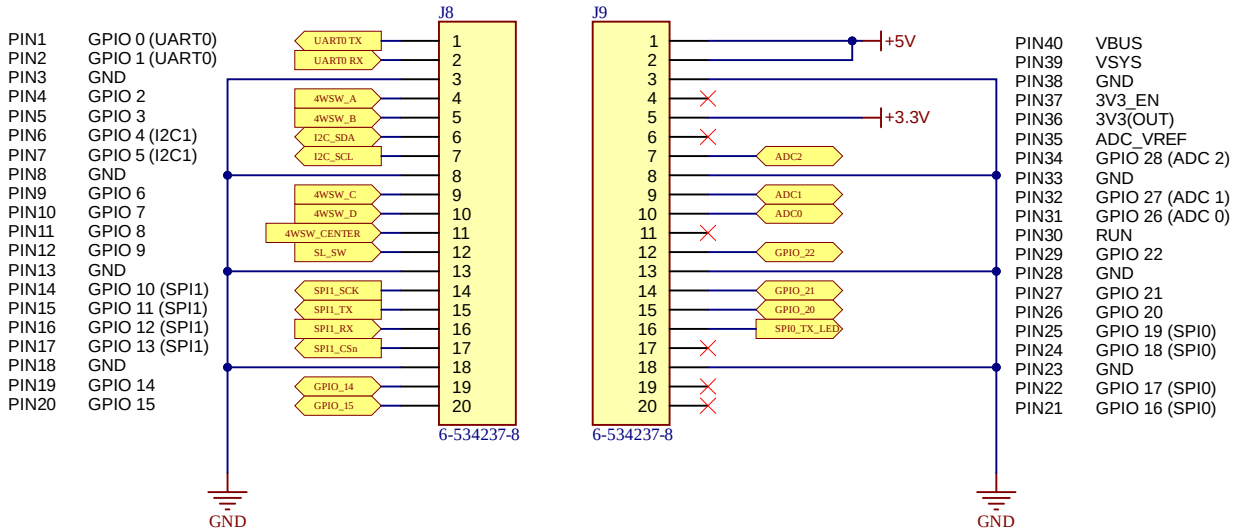

Zurich University of Applied Sciences
InES - Institute of Embedded Systems
PO Box 805
8401 Winterthur
Switzerland

© InES
This document is property of InES - Institute of Embedded Systems
No copying or distribution without prior written permission of InES

Title
Raspberry Pi Pico Connectores

Size	Document Number	Version
A4	5	1.3

Sheet 5 of 6 | Print date: 02.05.2023 | Drawn by: Lukas Eugster
Filename: RasPiPico.SchDoc

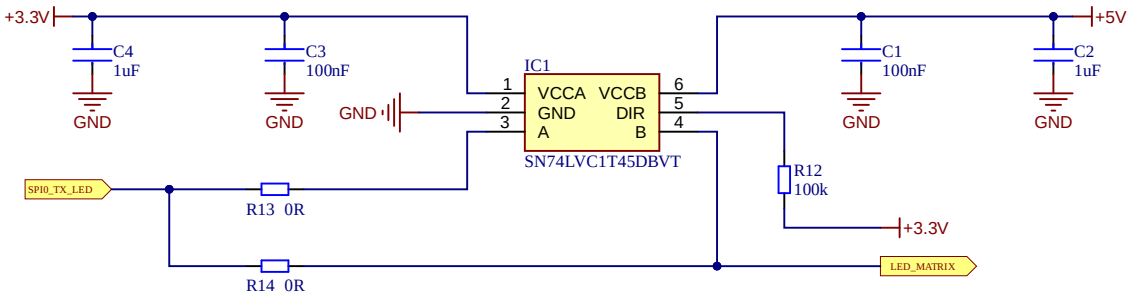

Zurich University of Applied Sciences
InES - Institute of Embedded Systems
PO Box 805
8401 Winterthur
Switzerland

© InES
This document is property of InES - Institute of Embedded Systems
No copying or distribution without prior written permission of InES

Title
Level Shifter

Size	Document Number	Version
A4	6	1.3

Sheet 6 of 6 | Print date: 02.05.2023 | Drawn by: Lukas Eugster

Filename: Level_Shifter.SchDoc

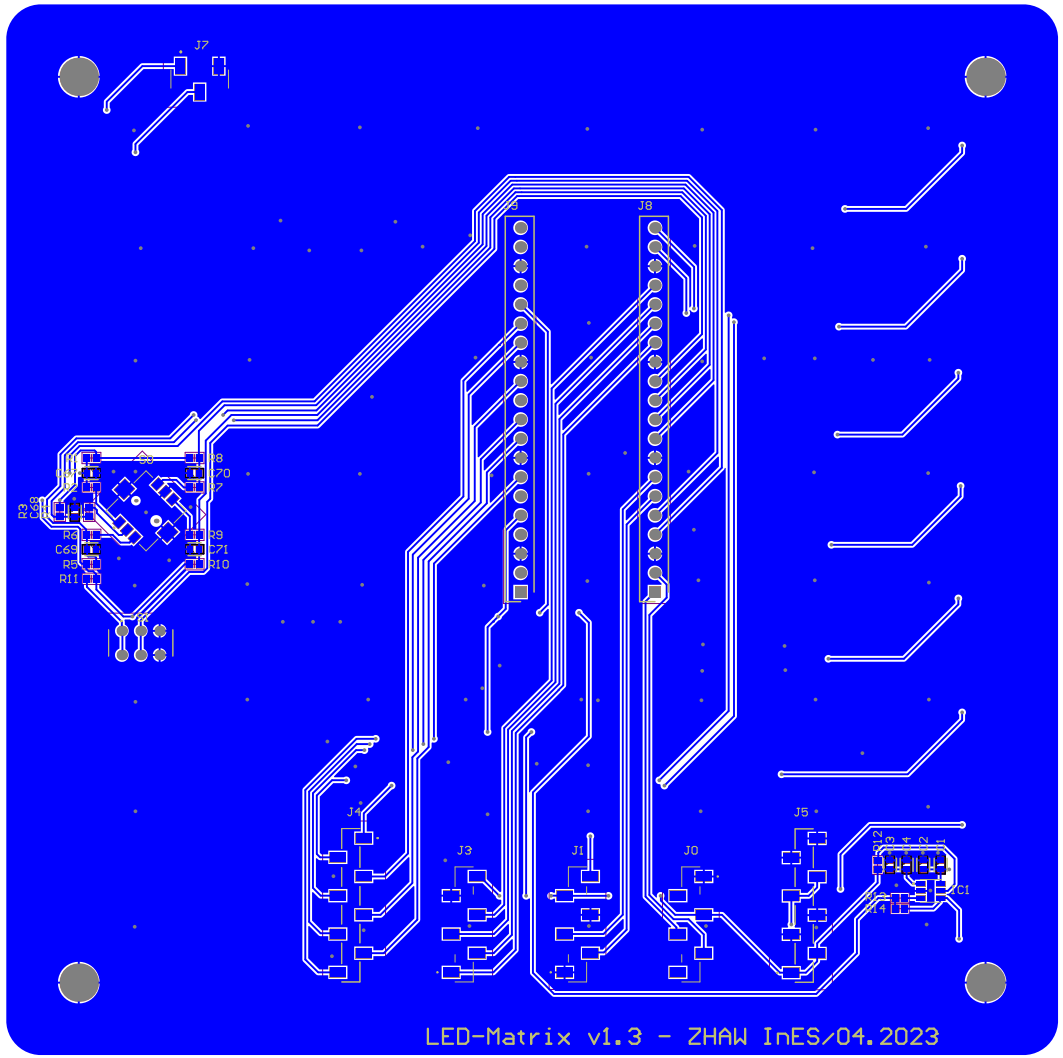
J7
J8
J4
J3
J1
J0
J5
LED-Matrix v1.3 - ZHAW InES/04.2023

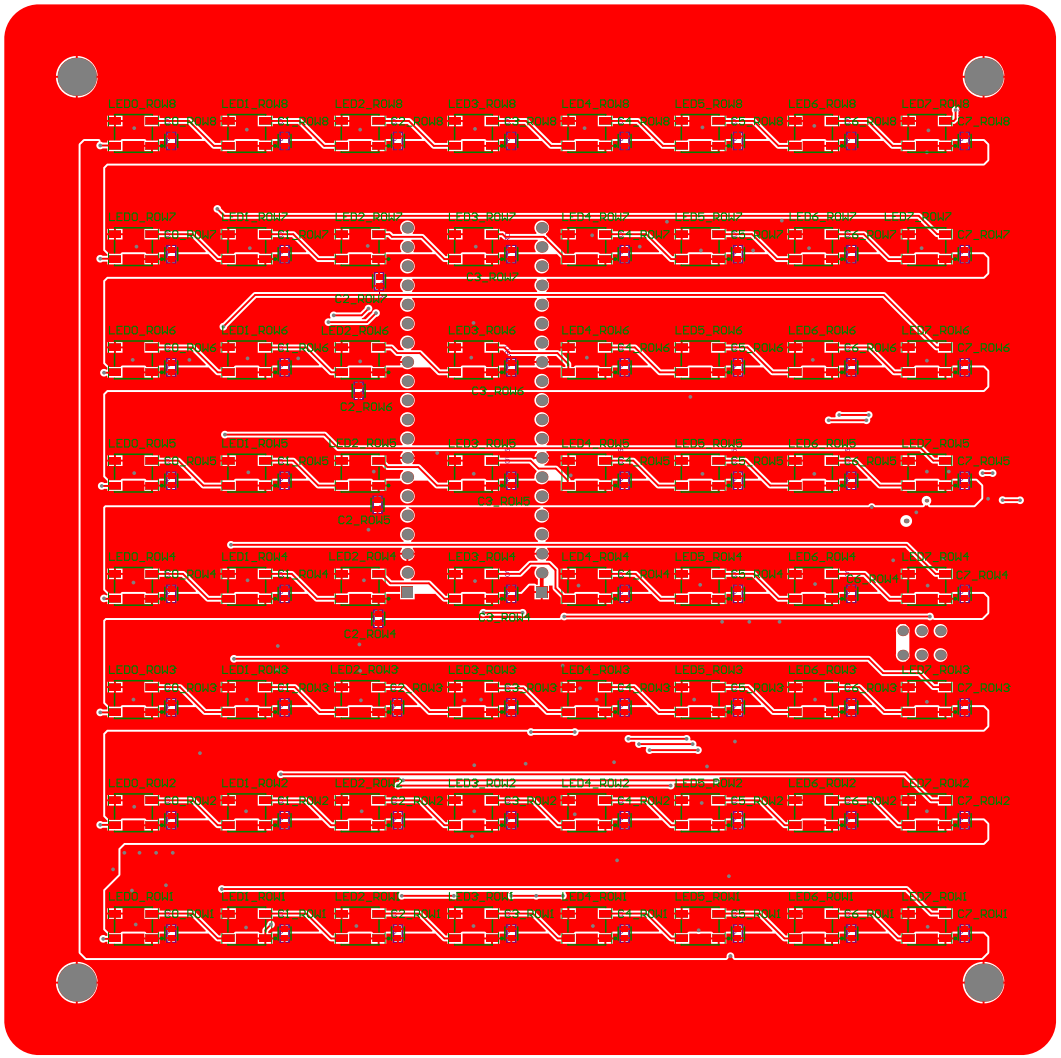
LED0_ROW8
LED1_ROW8
LED2_ROW8
LED3_ROW8
LED4_ROW8
LED5_ROW8
LED6_ROW8
LED7_ROW8
C7_ROW8
LED0_ROW7
LED1_ROW7
LED2_ROW7
LED3_ROW7
LED4_ROW7
LED5_ROW7
LED6_ROW7
LED7_ROW7
C7_ROW7
C3_ROW7
C2_ROW7
LED0_ROW6
LED1_ROW6
LED2_ROW6
LED3_ROW6
LED4_ROW6
LED5_ROW6
LED6_ROW6
LED7_ROW6
C7_ROW6
C3_ROW6
C2_ROW6
LED0_ROW5
LED1_ROW5
LED2_ROW5
LED3_ROW5
LED4_ROW5
LED5_ROW5
LED6_ROW5
LED7_ROW5
C7_ROW5
C3_ROW5
C2_ROW5
LED0_ROW4
LED1_ROW4
LED2_ROW4
LED3_ROW4
LED4_ROW4
LED5_ROW4
LED6_ROW4
LED7_ROW4
C7_ROW4
C3_ROW4
C2_ROW4
LED0_ROW3
LED1_ROW3
LED2_ROW3
LED3_ROW3
LED4_ROW3
LED5_ROW3
LED6_ROW3
LED7_ROW3
C7_ROW3
LED0_ROW2
LED1_ROW2
LED2_ROW2
LED3_ROW2
LED4_ROW2
LED5_ROW2
LED6_ROW2
LED7_ROW2
C7_ROW2
LED0_ROW1
LED1_ROW1
LED2_ROW1
LED3_ROW1
LED4_ROW1
LED5_ROW1
LED6_ROW1
LED7_ROW1
C7_ROW1

Designator	Comment	Standard Footprint	JLCPCB Part #	Quantity
C0_ROW1, C0_ROW2, C0_ROW3, C0_ROW4, C0_ROW5, C0_ROW6, C0_ROW7, C0_ROW8, C1, C1_ROW1, C1_ROW2, C1_ROW3, C1_ROW4, C1_ROW5, C1_ROW6, C1_ROW7, C1_ROW8, C2_ROW1, C2_ROW2, C2_ROW3, C2_ROW4, C2_ROW5, C2_ROW6, C2_ROW7, C2_ROW8, C3, C3_ROW1, C3_ROW2, C3_ROW3, C3_ROW4, C3_ROW5, C3_ROW6, C3_ROW7, C3_ROW8, C4_ROW1, C4_ROW2, C4_ROW3, C4_ROW4, C4_ROW5, C4_ROW6, C4_ROW7, C4_ROW8, C5_ROW1, C5_ROW2, C5_ROW3, C5_ROW4, C5_ROW5, C5_ROW6, C5_ROW7, C5_ROW8, C6_ROW1, C6_ROW2, C6_ROW3, C6_ROW4, C6_ROW5, C6_ROW6	100nF	C0603		71
C2, C4	1uF	C0603		2
IC1	SN74LVC1T45DBVT	SOT-23-6	C116653	1
J8, J9	6-534237-8		C124410	2
LED0_ROW1, LED0_ROW2, LED0_ROW3, LED0_ROW4, LED0_ROW5, LED0_ROW6, LED0_ROW7, LED0_ROW8, LED1_ROW1, LED1_ROW2, LED1_ROW3, LED1_ROW4, LED1_ROW5, LED1_ROW6, LED1_ROW7, LED1_ROW8, LED2_ROW1, LED2_ROW2, LED2_ROW3, LED2_ROW4, LED2_ROW5, LED2_ROW6, LED2_ROW7, LED2_ROW8, LED3_ROW1, LED3_ROW2, LED3_ROW3, LED3_ROW4	1655		C2761795	64
R1, R3, R5, R8, R10, R11	10k	R0603		6
R2, R4, R6, R7, R9	1k	R0603		5
R12	100k	R0603		1
R13	0R	R0603		1
S0	SKRHABE010		C139794	1