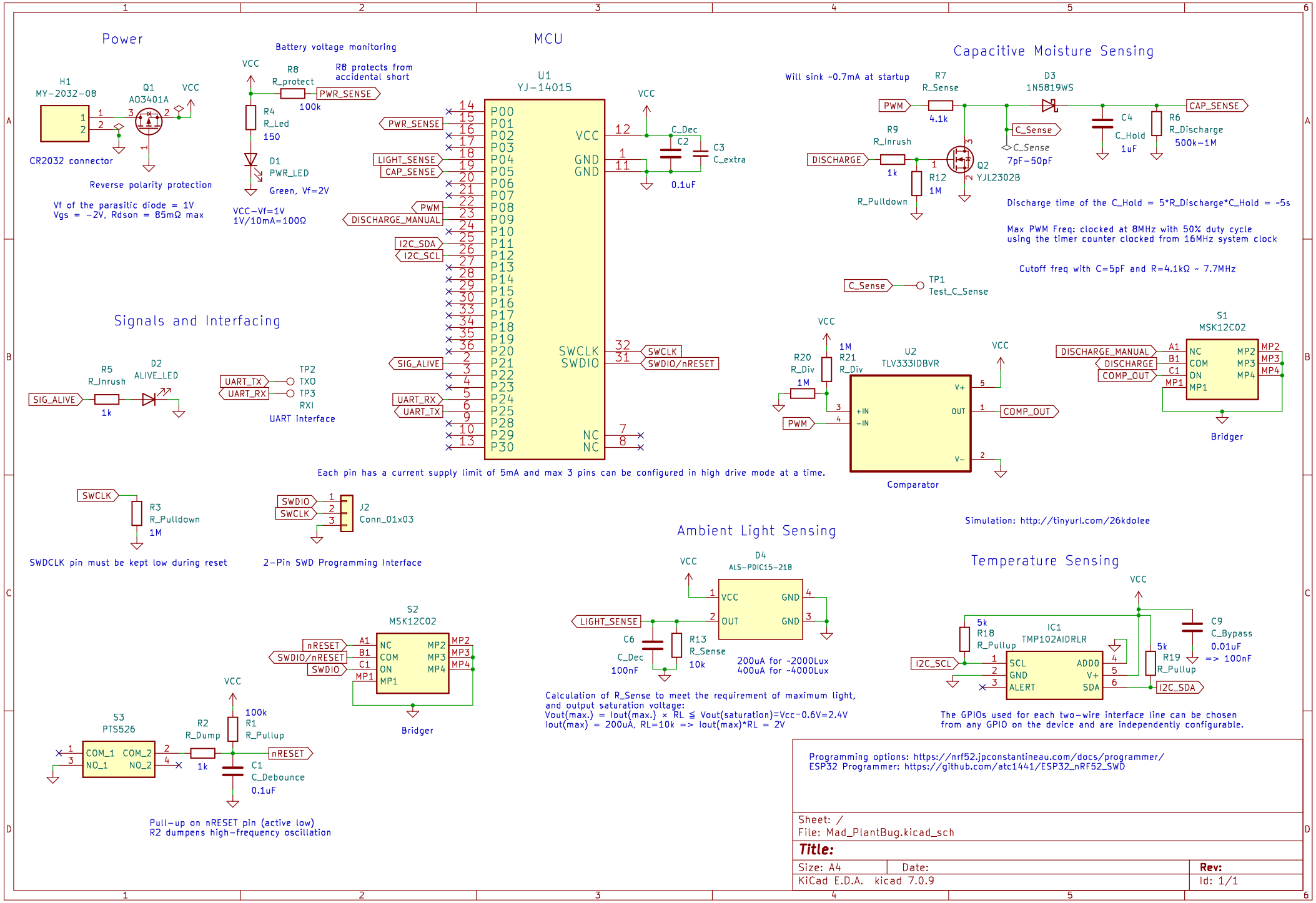
Power
H1
MY-2032-08
CR2032 connector
Q1
AO3401A
VCC
Reverse polarity protection
Vf of the parasitic diode = 1V
Vgs = -2V, Rdson = 85mΩ max
Battery voltage monitoring
VCC
R8
R_protect
100k
R8 protects from accidental short
PWR_SENSE
R4
R_Led
150
D1
PWR_LED
Green, Vf=2V
VCC-Vf=1V
1V/10mA=100Ω
MCU
U1
YJ-14015
PWR_SENSE
LIGHT_SENSE
CAP_SENSE
PWM
DISCHARGE_MANUAL
I2C_SDA
I2C_SCL
SIG_ALIVE
UART_RX
UART_TX
P00
P01
P02
P03
P04
P05
P06
P07
P08
P09
P10
P11
P12
P13
P14
P15
P16
P17
P18
P19
P20
P21
P22
P23
P24
P25
P28
P29
P30
VCC
GND
GND
SWCLK
SWDIO
NC
NC
C_Dec
C2
0.1uF
C3
C_extra
SWCLK
SWDIO/nRESET
Each pin has a current supply limit of 5mA and max 3 pins can be configured in high drive mode at a time.
Capacitive Moisture Sensing
Will sink ~0.7mA at startup
R7
R_Sense
4.1k
D3
1N5819WS
PWM
CAP_SENSE
C_Sense
C4
C_Hold
1uF
R6
R_Discharge
500k-1M
R9
R_Inrush
1k
DISCHARGE
R12
1M
R_Pulldown
Q2
YJL2302B
C_Sense
7pF-50pF
Discharge time of the C_Hold = 5*R_Discharge*C_Hold = ~5s
Max PWM Freq: clocked at 8MHz with 50% duty cycle
using the timer counter clocked from 16MHz system clock
Cutoff freq with C=5pF and R=4.1kΩ ~ 7.7MHz
C_Sense
TP1
Test_C_Sense
Signals and Interfacing
R5
R_Inrush
1k
SIG_ALIVE
D2
ALIVE_LED
UART_TX
UART_RX
TP2
TXO
TP3
RXI
UART interface
VCC
R20
R_Div
1M
R21
R_Div
1M
U2
TLV333IDBVR
PWM
+IN
-IN
OUT
V+
V-
COMP_OUT
Comparator
S1
MSK12C02
DISCHARGE_MANUAL
DISCHARGE
COMP_OUT
NC
COM
ON
MP1
MP2
MP3
MP4
Bridger
SWCLK
R3
R_Pulldown
1M
SWDCLK pin must be kept low during reset
SWDIO
SWCLK
J2
Conn_01x03
2-Pin SWD Programming Interface
Simulation: http://tinyurl.com/26kdolee
Ambient Light Sensing
VCC
D4
ALS-PDIC15-21B
LIGHT_SENSE
C6
C_Dec
100nF
R13
R_Sense
10k
200uA for ~2000Lux
400uA for ~4000Lux
Calculation of R_Sense to meet the requirement of maximum light,
and output saturation voltage:
Vout(max.) = Iout(max.) × RL ≦ Vout(saturation)=Vcc-0.6V=2.4V
Iout(max) = 200uA, RL=10k => Iout(max)*RL = 2V
Temperature Sensing
VCC
5k
R18
R_Pullup
IC1
TMP102AIDRLR
SCL
GND
ALERT
ADD0
V+
SDA
I2C_SCL
I2C_SDA
5k
R19
R_Pullup
C9
C_Bypass
0.01uF
=> 100nF
The GPIOs used for each two-wire interface line can be chosen
from any GPIO on the device and are independently configurable.
S2
MSK12C02
nRESET
SWDIO/nRESET
SWDIO
Bridger
S3
PTS526
COM_1
COM_2
NO_1
NO_2
R2
R_Dump
1k
VCC
100k
R1
R_Pullup
nRESET
C1
C_Debounce
0.1uF
Pull-up on nRESET pin (active low)
R2 dumpens high-frequency oscillation
Programming options: https://nrf52.jpconstantineau.com/docs/programmer/
ESP32 Programmer: https://github.com/atc1441/ESP32_nRF52_SWD
Sheet: /
File: Mad_PlantBug.kicad_sch
Title:
Size: A4
Date:
Rev:
KiCad E.D.A. kicad 7.0.9
Id: 1/1