U17A
AN000 R12
AN001 P11
AN002 N12
PGAVSS000 L10
AN100 M11
AN101 R11
AN102 P10
PGAVSS100 L9
U5V_V N11
IMU_INT2 R10
BT_WAKE M10
RTC_IRQ N10
DAC0 M9
DAC1 M8
SDRAM_DQ0 R1
SDRAM_DQ1 P1
SDRAM_DQ2 N1
SDRAM_DQ3 N2
SDRAM_DQ4 N3
SDRAM_DQ5 M1
SDRAM_DQ6 L4
SDRAM_DQ7 K4
JTAG_TMS/SWD_DIO B2
JTAG_TDO/TRACE_SWO B1
P110 C2
SDRAM_A5 C1
SDRAM_A4 C3
SDRAM_A3 D3
SDRAM_A2 E4
SDRAM_A1 E3
CODEC_IRQ A12
SPI9_MOSI B12
SPI9_SCK D11
SD0DAT3 C12
SD0DAT2 G9
P207 C13
JTAG_TCLK/SWD_CLK F5
SDRAM_A6 B3
SDRAM_A7 A2
SDRAM_A8 A3
SDRAM_A9 C4
SDRAM_A10 D4
SDRAM_A11 D5
SDRAM_A12 D6
SDRAM_A13 D7
SDRAM_A14 C5
SDRAM_A15 C6
SDRAM_RAS# C7
SDRAM_CAS# B6
LED_R E10
LED_G F9
LED_B C11
I2C0_SCL N13
I2C0_SDA P13
RXD7 N14
SSISCK0 N15
SSIWS0 K10
SSITXD0 M13
SSIRXD0 J9
USB_STATE A13
SPI3_MISO B13
SPI3_MOSI C14
SD0DAT1 C15
SD0DAT0 D14
SD0SMD D13
SD0CLK D12
RTC_CS E11
WDT_RESET E14
SD1CLK R4
SD1SMD N4
SD1DAT0 N5
SD1DAT1 P5
SD1DAT2 R5
SD1DAT3 M5
SYSV_V M6
RF_CS N6
RF_SCK M7
RF_MOSI P6
RF_MISO N7
SDA2 R13
SCL2 R14
P513 P13
P514 P14
P515 K9
P000/AN000/IVCMP2/IRQ6DS
P001/AN001/IVCMP2/IRQ7DS
P002/AN002/IVCMP2/IRQ8DS
P003/PGAVSS000
P004/AN100/IVCMP2/IRQ9DS
P005/AN101/IVCMP2/IRQ10DS
P006/AN102/IVCMP2/IRQ11DS
P007/PGAVSS100
P008/AN003/IRQ12DS
P009/AN004/IRQ13DS
P010/AN103/IRQ14DS
P011/AN104/IRQ15DS
P014/AN005/AN105/DA0/IVREF3
P015/AN006/AN106/DA1/IVCMP1/IRQ13
P100/AGTIO0_A/GTETRGA_A/RXD0_A/MISO0_A/SCL0_A/SCK1_A/MISOA_A/SCL1_B/D00/LCD_EXTCLK_A/IRQ2/KR00
P101/AGTEE0/GTETRGB_A/TXD0_A/MOSI_A/SDA0_A/CTS1_RTS1_A/SS1_A/MOSIA_A/SDA1_B/D01/LCD_CLK_A/IRQ1/KR01
P102/AGTO0/GTOWLO_A/GTIOC2B_A/SCK0_A/RSPCKA_A/ADTRG0_A/D02/LCD_TCON0_A/KR02
P103/GTOWUP_A/GTIOC2A_A/CTS0_RTS0_A/SS0_A/SSLA0_A/D03/LCD_TCON1_A/KR03
P104/GTETRGB_B/RXD8_A/MISO8_A/SCL8_A/SSLA1_A/D04/LCD_TCON2_A/IRQ1/KR04
P105/GTETRGA_C/TXD8_A/MOSI8_A/SDA8_A/SSLA2_A/D05/LCD_TCON3_A/IRQ0/KR05
P106/GTIOC8B_A/SCK8_A/SSLA3_A/D06/LCD_DATA00_A/KR06
P107/GTIOC8A_A/CTS8_RTS8_A/SS8_A/D07/LCD_DATA01_A/KR07
P108/GTIOC0B_A/CTS9_RTS9_B/SS9_B/SSLB0_B/TMS_SWDIO
P109/GTOVUP_A/GTIOC1A_A/TXD9_B/MISO9_B/SDA9_B/MOSIB_B/CTX1_A/CLKOUT_B/TDO_SWO
P110/GTOVLO_A/GTIOC1B_A/CTS2_RTS2_B/SS2_B/RXD9_B/MISO9_B/SCL9_B/MISOB_B/VCOUT/CRX1_A/TDI/IRQ3
P111/GTIOC3A_A/SCK2_B/SCK9_B/RSPCKB_B/A05/LCD_DATA12_A/IRQ4
P112/GTIOC3B_A/TXD2_B/MOSI2_B/SDA2_B/A04/SSISCK0_B/LCD_DATA11_A
P113/RXD2_B/MISO2_B/SCL2_B/A03/SSIWS0_B/LCD_DATA10_A
P114/A02/SSIRXD0_B/LCD_DATA09_A
P115/A01/SSITXD0_B/LCD_DATA08_A
P202/GTIOC5B_A/SCK2_A/RXD9_A/MISO9_A/SCL9_A/MISOB_A/WR1/BC1/CRX0_A/SD0DAT6/ET0_ERXD2/LCD_TCON3_B/IRQ3DS
P203/GTIOC5A_A/CTS2_RTS2_A/SS2_A/TXD9_A/MOSI9_A/SDA9_A/MOSIB_A/A19/TSCAP_B/CTX0_A/SD0DAT5/ET0_COL/IRQ2DS
P204/AGTIO1_A/GTIW_A/GTIOC4B_B/SCK4_A/SCK9_A/RSPCKB_A/SCL0_B/A18/TS00/SSISCK1_A/USB_OVRCURB_ADS/SD0DAT4/ET0_RX_DV
P205/AGTO1/GTIV_A/GTIOC4A_B/TXD4_A/MOSI4_A/SDA4_A/CTS9_RTS9_A/SS9_A/SSLB0_A/SCL1_A/A16/TSCAP_A/SSIWS1_A/USB_OVRCURA_ADS/SD0DAT3/ET0_WOL/ET0_WOL/IRQ1DS
P206/GTIU_A/RXD4_A/MISO4_A/SCL4_A/SSLB1_A/SDA1_A/WAIT/TS01/SSIDATA1_A/USB_VBUSEN_A/SD0DAT2/ET0_LINKSTA/ET0_LINKSTA/IRQ0DS
P207/SSLB2_A/A17/TS02
P300/GTIOC0A_A/SSLB1_B/TCK_SWCLK
P301/GTOULO_A/GTIOC4B_A/RXD2_A/MISO2_A/SCL2_A/SSLB2_B/A06/LCD_DATA13_A/IRQ6
P302/GTOUUP_A/GTIOC4A_A/TXD2_A/MOSI2_A/SDA2_A/SSLB3_B/A07/LCD_DATA14_A/IRQ5
P303/GTIOC7B_A/A08/LCD_DATA15_A
P304/GTIOC7A_A/RXD6_A/MISO6_A/SCL6_A/A09/LCD_DATA16_A/IRQ9
P305/TXD6_A/MOSI6_A/SDA6_A/A10/LCD_DATA17_A/IRQ8
P306/SCK6_A/A11/LCD_DATA18_A
P307/CTS6_RTS6_A/SS6_A/A12/LCD_DATA19_A
P308/A13/LCD_DATA20_A
P309/A14/LCD_DATA21_A
P310/A15/LCD_DATA22_A
P311/CS2/RAS/LCD_DATA23_A
P312/CS3/CAS
P313/A20/SD0DAT7/ET0_ERXD3/LCD_TCON2_B
P314/A21/LCD_TCON1_B
P315/A22/LCD_TCON0_B
P400/GTIOC6A_A/SCK4_B/SCK7_A/SCL0_A/ADTRG1_B/AUDIO_CLK/ET1_TX_CLK/IRQ0
P401/GTETRGA_B/GTIOC6B_A/CTS4_RTS4_B/SS4_B/TXD7_A/MOSI7_A/SDA7_A/SDA0_A/CTX0_B/ET0_MDC/ET0_MDC/IRQ5DS
P402/AGTIO0_B/AGTIO1_B/RXD7_A/MISO7_A/SCL7_A/RTCIC0/CRX0_B/ET0_MDIO/ET0_MDIO/IRQ4DS
P403/AGTIO0_C/AGTIO1_C/GTIOC3A_B/CTS7_RTS7_A/SS7_A/RTCIC1/SSISCK0_A/ET1_MDC/ET1_MDC/PIXD7
P404/GTIOC3B_B/RTCIC2/SSIWS0_A/ET1_MDIO/ET1_MDIO/PIXD6
P405/GTIOC1A_B/SSITXD0_A/ET1_TX_EN/RMII1_TXD_EN/PIXD5
P406/GTIOC1B_B/SSIRXD0_A/ET1_RX_ER/RMII1_TXD1/PIXD4
P407/CTS4_RTS4_A/SS4_A/SSLB3_A/SDA0_B/RTCOUT/ADTRG0/TS03/USB_VBUS/ET0_EXOUT/ET0_EXOUT
P408/GTOWLO_B/GTIOC10B_A/RXD3_A/MISO3_A/SCL3_A/TS04/USB_ID_A/USBHS_ID/ET0_CRS/RMII0_CRS_DV/IRQ7
P409/GTOWUP_B/GTIOC10A_A/TXD3_A/MOSI3_A/SDA3_A/TS05/USB_EXICEN_A/USBHS_EXICEN/ET0_RX_CLK/RMII0_RX_ER/IRQ6
P410/AGTOB1/GTOVLO_B/GTIOC9B_A/RXD0_B/MISO0_B/SCL0_B/SCK3_A/MISOA_B/TS06/SD0DAT1/ET0_ERXD0/RMII0_RXD1/IRQ5
P411/AGTOA1/GTOVUP_B/GTIOC9A_A/TXD0_B/MOSI0_B/SDA0_B/CTS3_RTS3_A/SS3_A/MOSIA_B/TS07/SD0DAT0/ET0_ERXD1/RMII0_RXD0/IRQ4
P412/GTOULO_B/SCK0_B/RSPCKA_B/TS08/SD0CMD/ET0_ETXD0/REF50CK0
P413/GTOUUP_B/CTS0_RTS0_B/SS0_B/SSLA0_B/TS09/SD0CLK/ET0_ETXD1/RMII0_TXD0
P414/SSLA1_B/TS10/SD0WP/ET0_RX_ER/RMII0_TXD1
P415/SSLA2_B/TS11/ET0_TX_EN/RMII0_TXD_EN
P500/AGTOA0/GTIU_B/GTIOC11A_A/QSPCLK/AN016/IVREF0/USB_VBUSEN_B/SD1CLK
P501/AGTOB0/GTIV_B/GTIOC11B_A/TXD5_A/MOSI5_A/SDA5_A/QSSL/AN116/IVREF1/USB_OVRCURA_B/SD1CMD/IRQ11
P502/GTIW_B/GTIOC12A/RXD5_A/MISO5_A/SCL5_A/QIO0/AN017/IVCMP0/USB_OVRCURB_B/SD1DAT0/IRQ12
P503/GTETRGC_B/GTIOC12B/CTS6_RTS6_B/SS6_B/SCK5_A/QIO1/AN117/USB_EXICEN_B/SD1DAT1
P504/GTETRGD_B/GTIOC13A/SCK6_B/CTS5_RTS5_A/SS5_A/QIO2/AN018/USB_ID_B/SD1DAT2
P505/GTIOC13B/RXD6_B/MISO6_B/SCL6_B/QIO3/AN118/SD1DAT3/IRQ14
P506/TXD6_B/MOSI6_B/SDA6_B/AN019/SD1CD/IRQ15
P507/CTS5_RTS5_B/SS5_B/AN119/SD1WP
P508/SCK5_B/AN020
P509/TXD5_B/MOSI5_B/SDA5_B/AN120
P510/RXD5_B/MISO5_B/SCL5_B/AN021
P511/GTIOC0B_B/RXD4_B/MISO4_B/SCL4_B/SDA2/CRX1_B/ET1_TX_ER/PCKO/IRQ15
P512/GTIOC0A_B/TXD4_B/MOSI4_B/SDA4_B/SCL2/CTX1_B/ET1_ETXD2/VSYNC/IRQ14
P513/ET1_ETXD3/LCD_DATA16_B
P514/GTETRGB_C
P515
P600/RD/LCD_DATA02_A
P601/WR/WR0/DQM0/LCD_DATA03_A
P602/EBCLK/SDCLK/LCD_DATA04_A
P603/D13
P604/D12
P605/D11
P606/LCD_DATA03_B
P607/LCD_DATA04_B
P608/A00/BC0/DQM1/LCD_DATA07_A
P609/CS1/CKE/LCD_DATA06_A
P610/CS0/WE/LCD_DATA05_A
P611/SDCS
P612/D08
P613/D09
P614/D10
P615/LCD_DATA10_B
P700/GTIOC5A_B/ET1_ETXD1/RMII1_TXD0/PIXD3
P701/GTIOC5B_B/ET1_ETXD0/REF50CK1/PIXD2
P702/GTIOC6A_B/ET1_ERXD1/RMII1_RXD0/PIXD1
P703/GTIOC6B_B/ET1_ERXD0/RMII1_RXD1/PIXD0
P704/ET1_RX_CLK/RMII1_RX_ER/HSYNC
P705/ET1_CRS/RMII1_CRS_DV/PIXCLK
P706/RXD3_B/MISO3_B/SCL3_B/USBHS_OVRCURB/IRQ7
P707/TXD3_B/MOSI3_B/SDA3_B/USBHS_OVRCURA/IRQ8
P708/RXD1_B/MISO1_B/SCL1_B/SSLA3_B/TS12/ET0_ETXD3/IRQ11
P709/TXD1_B/MOSI1_B/SDA1_B/TS13/ET0_ETXD2/IRQ10
P710/SCK1_B/TS14/ET0_TX_ER
P711/CTS1_RTS1_B/SS1_B/TS15/ET0_TX_CLK
P712/GTIOC2B_B/TS16
P713/GTIOC2A_B/TS17/ET1_EXOUT/ET1_EXOUT
P800/D14
P801/D15/SD1DAT4
P802/SD1DAT5/LCD_DATA02_B
P803/SD1DAT6/LCD_DATA01_B
P804/SD1DAT7/LCD_DATA00_B
P805/LCD_DATA17_B
P806/LCD_EXTCLK_B
P807
P808
P809
P810
P811/CTX0_C
P812/CRX0_C
P813/GTIOC9B_B
P900/A23/LCD_CLK_B
P901/LCD_DATA15_B
P902/LCD_DATA23_B
P903/GTIOC7A_B/SD0CD
P904/GTIOC7B_B
P905/CS4/LCD_DATA11_B
P906/CS5/LCD_DATA12_B
P907/CS6/LCD_DATA13_B
P908/CS7/LCD_DATA14_B
P909/LCD_DATA21_B
P910/LCD_DATA22_B
P911/GTIOC8B_B
P912/GTIOC8A_B
P913
P914/LCD_DATA19_B
P915/LCD_DATA20_B
PA00/LCD_DATA05_B
PA01/LCD_DATA06_B
PA02/TXD7_B/MOSI7_B/SDA7_B/IRQ10
PA03/RXD7_B/MISO7_B/SCL7_B/IRQ9
PA04/GTIOC11B_B/SCK7_B
PA05/GTIOC11A_B/CTS7_RTS7_B/SS7_B
PA06/GTIOC10B_B
PA07/GTIOC10A_B
PA08/LCD_DATA09_B
PA09/LCD_DATA08_B
PA10/LCD_DATA07_B
PA12
PA13
PA14
PA15/GTIOC9A_B
PA11/LCD_DATA18_B
PB00/SCK3_B/USBHS_VBUSEN
PB01/CTS3_RTS3_B/SS3_B/USBHS_VBUS
PB02/CTS8_RTS8_B/SS8_B/ET1_RX_DV
PB03/SCK8_B/ET1_COL
PB04/TXD8_B/MOSI8_B/SDA8_B/ET1_ERXD2/IRQ12
PB05/RXD8_B/MISO8_B/SCL8_B/ET1_ERXD3/IRQ13
PB06/ET1_WOL/ET1_WOL
PB07/ET1_LINKSTA/ET1_LINKSTA
L3 P600
L2 SDRAM_DQM0
L1 SDRAM_SDCLK
K3 SDRAM_DQ13
K2 SDRAM_DQ12
K1 SDRAM_DQ11
K6 P606
K5 P607
F4 SDRAM_DQM1
G4 SDRAM_CKE
E1 SDRAM_WE#
E2 SDRAM_SDCS#
F2 SDRAM_DQ8
F3 SDRAM_DQ9
F1 SDRAM_DQ10
G8 VBUSCTRL
M14 GPT5_B
M15 GPT5_A
K11 GPT6_A
J8 GPT6_B
J10 P704
L13 P705
L14 P706
L15 P707
D15 SCI1_RXD
E13 SCI1_TXD
F10 SCI1_RTS
E12 SCI1_CTS
F11 GPT2_B
G10 GPT2_A
P2 SDRAM_DQ14
R2 SDRAM_DQ15
R3 VSEL3
P4 VSEL2
M4 VSEL1
R13 WIFI_REG_ON
M12 CODEC_PWR
P12 SDRAM_PWR_EN
K7 LORA_PWR_EN
K8 CARD_PWR_EN
P3 BT_REG_ON
L5 CAN0_TX
L6 CAN0_RX
G1 P813
E9 P900
B11 P901
A11 P902
D9 GPT7_A
C9 GPT7_B
A6 P905
F6 P906
E7 P907
E7 P908
E8 RF_RST
D8 RF_ANT_SW
A7 GPT8_B
B7 GPT8_A
H8 P913
E5 P914
E6 P915
J7 PA00
J6 PA01
H6 TXD7
J5 CHARGER_INT
J4 PA04
J3 CTS7
J2 GPT10_B
J1 GPT10_A
G7 PA08
H4 RF_BUSY
H5 RF_DIO1
G5 PA12
H7 PA13
G3 PA14
G2 PA15
G6 PWR_SEL
H9 SPI3_SCK
K13 USBHS_STATE
J11 ADC1_CS
K12 SPI8_SCK
H10 SPI8_MOSI
J12 SPI8_MISO
H11 ADC2_CS
G11 EN_AVDD
R7FS7G27H2A01CBD

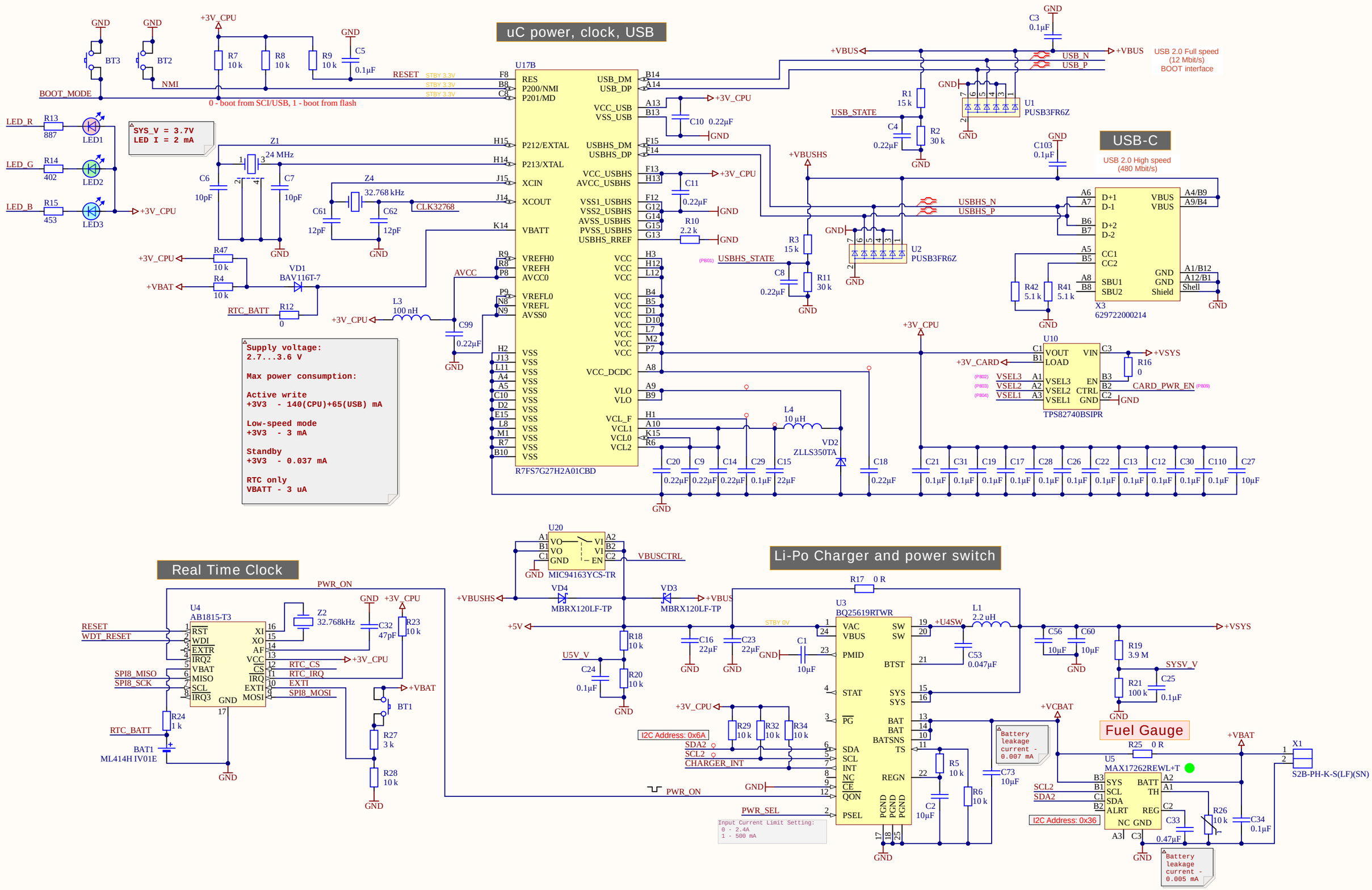

uC power, clock, USB
USB-C
Real Time Clock
Li-Po Charger and power switch
Fuel Gauge
U17B
R7FS7G27H2A01CBD
U1 PUSB3FR6Z
U2 PUSB3FR6Z
X3 629722000214
U10 TPS82740BSIPR
U4 AB1815-T3
U20 MIC94163YCS-TR
U3 BQ25619RTWR
U5 MAX17262REWL+T
X1 S2B-PH-K-S(LF)(SN)
BOOT_MODE
0 - boot from SCI/USB, 1 - boot from flash
SYS_V = 3.7V
LED I = 2 mA
Supply voltage:
2.7...3.6 V
Max power consumption:
Active write
+3V3 - 140(CPU)+65(USB) mA
Low-speed mode
+3V3 - 3 mA
Standby
+3V3 - 0.037 mA
RTC only
VBATT - 3 uA
USB 2.0 Full speed
(12 Mbit/s)
BOOT interface
USB 2.0 High speed
(480 Mbit/s)
I2C Address: 0x6A
I2C Address: 0x36
Input Current Limit Setting:
0 - 2.4A
1 - 500 mA
Battery leakage current - 0.007 mA
Battery leakage current - 0.005 mA

Audio CODEC

VDD_IO Supply voltage:
1.8...3.6 V

Max power consumption:

Stereo record
+3V3 - 0.75 mA
(Sample rate=48 kHz)

Standby
+3V3 - 0.003 mA

Quiescent Current - 0.012 mA

X7
DF12NB(3.0)-20DS-0.5V(51)
HPL_P
HPL_N
HPR_P
HPR_N
AGND
MICBIAS1
MIC1_P
MIC1_N
MICBIAS2
MIC2_P
MIC2_N

U13
DA7217-00U32
MICBIAS1
MIC1_P/DMIC1CLK
MIC1_N/DMIC1IN
MICBIAS2
MIC2_P/DMIC2CLK
MIC2_N/DMIC2IN
VDDDIG
HPCSP
HPCSN
DACREF
VMID
VREF
HPCFN
HPCFP
GND_CP
GND
VDD
VDD_IO
VDD_MIC
HPL_P
HPL_N
HPR_P
HPR_N
nIRQ
SCL
SDA
AD
MCLK
BCLK
WCLK
DATIN
DATOUT

+1V8_CODEC
U12
NCP163AMX180TBG
OUT
IN
EN
GND
EP
+3V_CPU
CODEC_PWR
C63 0.1µF
C64 1µF
C58 1µF
C77 0.1µF

R35 10 k
CODEC_IRQ
I2C Address: 0x1A
SCL2
SDA2

M4
ICS-40730
VDD
Out-
Out+
GND

R33 453
Z5
SIT8021AC-J4-18S-2.048000D
2.048 Mhz
C39 0.1µF
R36 DNP
JTAG_TDO/TRACE_SWO
Do not populate if Z5 is mounted

Supply voltage:
1.8

Max power consumption:
100 uA

C35 C36 C37 C38 C54 C74 C55 C75 C76 C78 C59 C1 C3 1µF

P1

SDRAM

SDRAM 32 MB, 4 Meg x 16 x 4 banks
U6
MT48LC16M16A2B4-6A IT:G TR
+3V3_SDRAM
SDRAM_A14
SDRAM_A13
SDRAM_A15
SDRAM_A12
SDRAM_A11
SDRAM_A10
SDRAM_A9
SDRAM_A8
SDRAM_A7
SDRAM_A6
SDRAM_A5
SDRAM_A4
SDRAM_A3
SDRAM_A2
SDRAM_A1
SDRAM_SDCS#
SDRAM_RAS#
SDRAM_CAS#
SDRAM_WE#
SDRAM_DQM1
SDRAM_DQM0
SDRAM_CKE
SDRAM_SDCLK
SDRAM_DQ15
SDRAM_DQ14
SDRAM_DQ13
SDRAM_DQ12
SDRAM_DQ11
SDRAM_DQ10
SDRAM_DQ9
SDRAM_DQ8
SDRAM_DQ7
SDRAM_DQ6
SDRAM_DQ5
SDRAM_DQ4
SDRAM_DQ3
SDRAM_DQ2
SDRAM_DQ1
SDRAM_DQ0

Supply voltage:
3.0...3.6 V

Max power consumption:

+3V3 - 100 mA

Standby
+3V3 - 2.5 mA

U7
TPS82740BSIPR
+3V3_SDRAM
+VSYS
SDRAM_PWR_EN
VSEL3
VSEL2
VSEL1
VOUT
VIN
LOAD
EN
CTRL
GND

C40 C41 C42 C43 C44 C45 C46 C47 C49 C50
0.1µF 0.1µF 0.1µF 0.1µF 0.1µF 10nF 10nF 10nF 10nF 10µF

System interface

81 IO pins
Among them:
22 Analog inputs (6 synchronous)
2 Analog outputs
12 PWM

26-DF12NB(3.0)-60DS-0.5V(51)CT-ND
X2
DF12NB(3.0)-60DS-0.5V(51)

External RS-485
External CAN
Encoder interface
Optional JTAG Trace port
Encoder interface

	GND	1	60	GND	
RXD7		2	59		CAN0_RX
TXD7		3	58		CAN0_TX
CTS7		4	57	GND	
P514		5	56		P606
P513		6	55		P600
P515		7	54		P607
PA00		8	53	GND	
PA01		9	52		GPT10_B PA06
PA04		10	51		GPT10_A PA07
PA08		11	50	GND	
P704		12	49		PA13
P705		13	48		PA12
		14	47		PA14
		15	46		P813
		16	45		PA15
GND		17	44		P913
		18	43		P906
		19	42		P907
		20	41		P914
GPT8_A		21	40		P915
GPT8_B		22	39		P908
+3V_CPU		23	38		P900
		24	37		P905
		25	36		P901
+VSYS		26	35		P902
		27	34		
		28	33		
		29	32		
+VBAT		30	31		+5V

Current < 0.3 A on pin

26-DF12NB(3.0)-60DS-0.5V(51)CT-ND
X4
DF12NB(3.0)-60DS-0.5V(51)

External BLDC control
External DCDC
External Display
Internal, external ADC
External keyboard, LED controller

	GND	1	60	GND	
+VBUS		2	59		USB_P
		3	58		USB_N
		4	57		P707
GPT7_B	P904	5	56		P706
GPT7_A	P903	6	55		P207
GPT6_B	P703	7	54		SPI3_MISO P408
GPT6_A	P702	8	53		SPI3_MOSI P409
GPT5_B	P700	9	52		SPI3_SCK PB00
GPT5_A	P701	10	51	GND	
GPT2_B	P712	11	50		SPI9_MOSI P203
GPT2_A	P713	12	49		SPI9_SCK P204
	GND	13	48		SPI8_MOSI PB04
AIN/GPIO8		14	47		SPI8_MISO PB05
AIN/GPIO9		15	46		SPI8_SCK PB03
AIN/GPIO10		16	45	GND	
AIN/GPIO11		17	44		DAC1 P015
AIN/GPIO12		18	43		DAC0 P014
AIN/GPIO13		19	42	GND	
AIN/GPIO14		20	41		PGAVSS100
AIN/GPIO15		21	40		AN100
AIN/GPIO0		22	39		AN101
AIN/GPIO1		23	38		AN102
AIN/GPIO2		24	37		PGAVSS000
AIN/GPIO3		25	36		AN000
AIN/GPIO4		26	35		AN001
AIN/GPIO5		27	34		AN002
AIN/GPIO6		28	33		
AIN/GPIO7		29	32	GND	
	GND	30	31		I2C0_SCL
					I2C0_SDA

16-ch ADC

1349547P
U8
NCP163AMX330TBG

EN_AVDD
+VSYS
C52 1µF
IN EN OUT EP GND
+3V3_AVDD
C57 1µF
GND

Quiescent Current - 0.012 mA
Standby Current: Typ. 0.1 uA

296-ADS7028IRTERCT-ND
U9
ADS7028IRTER

AIN/GPIO0	15	AIN0/GPIO0	SCLK	13	SPI8_SCK
AIN/GPIO1	16	AIN1/GPIO1	SDI	14	SPI8_MOSI
AIN/GPIO2	1	AIN2/GPIO2	SDO	12	SPI8_MISO
AIN/GPIO3	2	AIN3/GPIO3	CS	11	ADC1_CS
AIN/GPIO4	3	AIN4/GPIO4			
AIN/GPIO5	4	AIN5/GPIO5			
AIN/GPIO6	5	AIN6/GPIO6			
AIN/GPIO7	6	AIN7/GPIO7	DECAP	8	C67
+3V3_AVDD	7	AVDD			
+3V_CPU	10	DVDD	TP GND	9	1µF
		17			

C68 1µF
C79 1µF
GND

AVDD: 2.35...5.5 V
DVDD: 1.65...5.5 V

Power consumption AVDD:
+3V3 - 610 uA

Standby
+3V3 - 7 uA

296-ADS7028IRTERCT-ND
U11
ADS7028IRTER

AIN/GPIO8	15	AIN0/GPIO0	SCLK	13	SPI8_SCK
AIN/GPIO9	16	AIN1/GPIO1	SDI	14	SPI8_MOSI
AIN/GPIO10	1	AIN2/GPIO2	SDO	12	SPI8_MISO
AIN/GPIO11	2	AIN3/GPIO3	CS	11	ADC2_CS
AIN/GPIO12	3	AIN4/GPIO4			
AIN/GPIO13	4	AIN5/GPIO5			
AIN/GPIO14	5	AIN6/GPIO6			
AIN/GPIO15	6	AIN7/GPIO7	DECAP	8	C83
+3V3_AVDD	7	AVDD			
+3V_CPU	10	DVDD	TP GND	9	1µF
		17			

C88 1µF
C93 1µF
GND

256 Mbit SPI Flash

U23
MX25L25673GZNI-08G

P110
RF_MISO
GND
C111 0.1µF
+3V_CPU
RF_SCK
RF_MOSI

1	CS	VCC	8
2	SO	SIO3	7
3	SIO2	CLK	6
4	GND	PAD SI	5
	9		

GND

uSD Card holder

GND
C82 0.1µF
C84 10µF
+3V_CARD
212799
uSD1
2908-05WB-MG

SD0DAT2	1	DAT2
SD0DAT3	2	CD/DAT3/CS
SD0SMD	3	CMD/DI
	4	VDD
SD0CLK	5	CLK/SCLK
GND	6	VSS2
SD0DAT0	7	DAT0/DO
SD0DAT1	8	DAT1

GND
GND

Max power consumption:

Active write
+3V3 - 24 mA

Standby
+3V3 - 0.36 mA

JTAG/SWD debug interface

+3V_CPU
R31 10 k
3587388
X6
DF12NB(3.0)-20DS-0.5V(51)

JTAG_TMS/SWD_DIO	20	19	
JTAG_TCLK/SWD_CLK	GND 18	17	
JTAG_TDO/TRACE_SWO	GND 16	15	
P110	GND 14	13	
BOOT_MODE		12	
RESET		11	
		10	GND
		9	
		8	
		7	
		6	
		5	
		4	
		3	
		2	
		1	

LoRa 868 Mhz

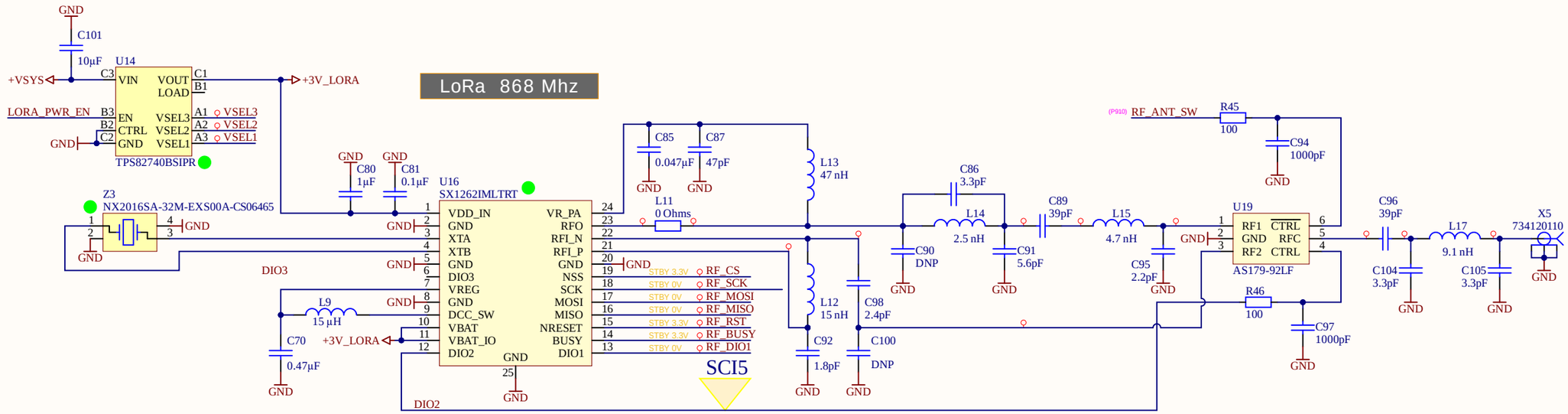

Wi-Fi module

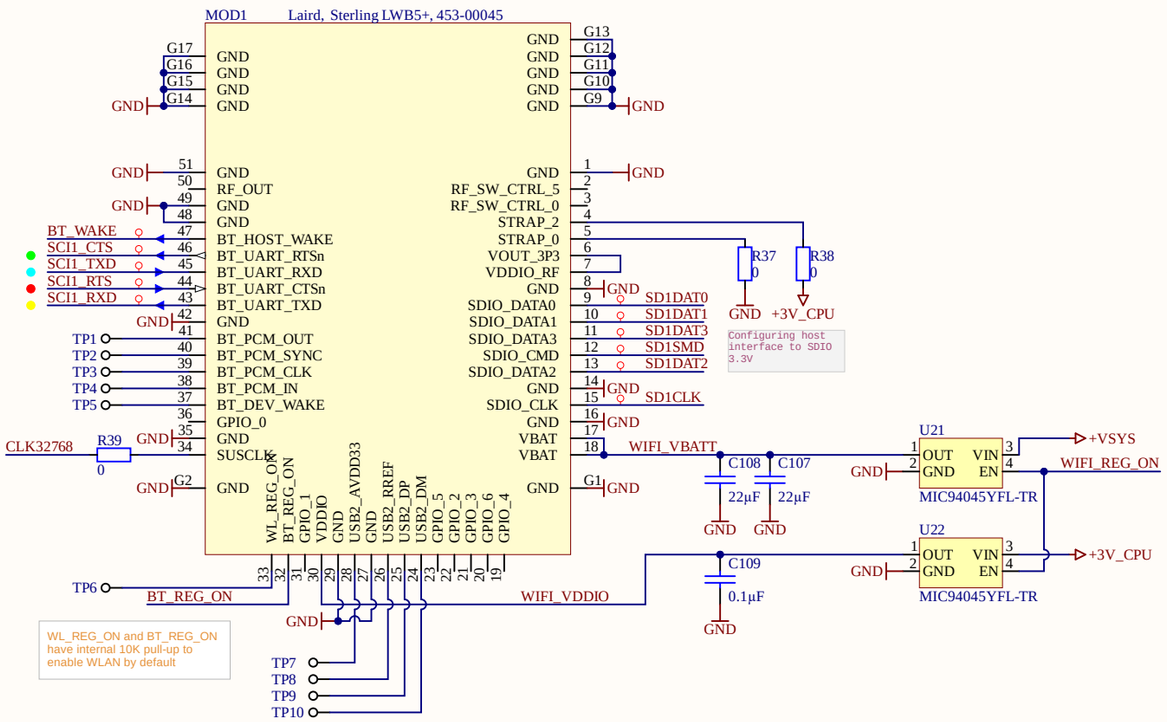

6D sensor

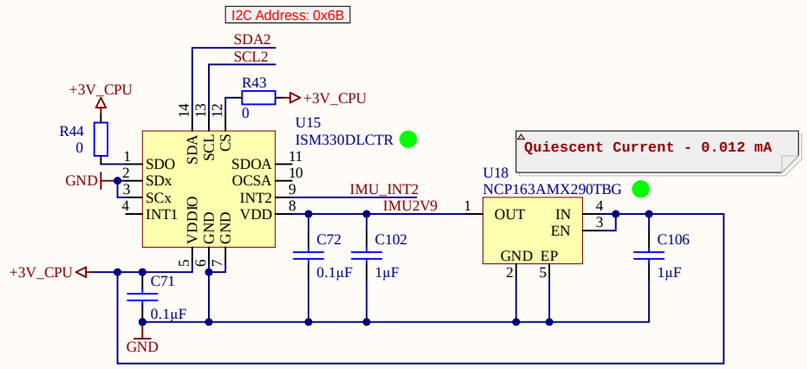


```
Max power consumption:

Wi-Fi mode active
BAT_V - 441 mA
VDDIO - 0.20 mA

Wi-Fi sleep
BAT_V - 0.030 mA
VDDIO - 0.20 mA

BlueTooth mode active
BAT_V - 36.2 mA
VDDIO - 0.27 mA

BlueTooth sleep
BAT_V - 0.004 mA
VDDIO - 0.300 mA

OFF mode
BAT_V - 0.003 mA
VDDIO - 0.00015 mA
```

```
Supply voltage:
1.7...3.6 V

Max power consumption:

+3V3  - 0.75 mA

Standby
+3V3  - 0.01 mA
```