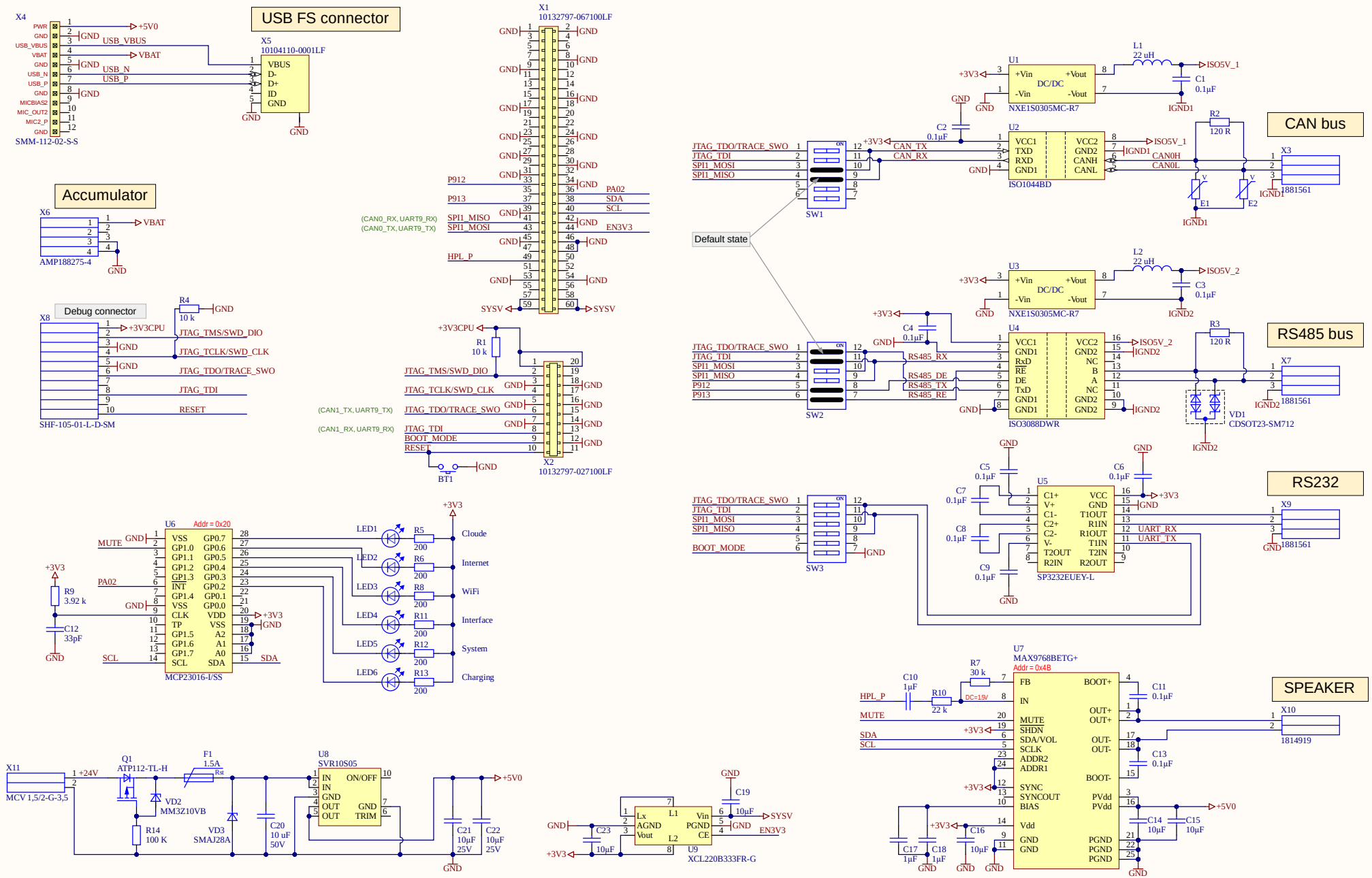

X4.M	2PH1-12-UA	
X10.M	1704853	
ANT1	W9003M	
ANT2	W9003M	
ANT3	W9003M	

Title		
Size A3	Number	Revision
Date: 1-22-2023		Sheet of
File: D:\Embedded\..\S7V10Logger.SchDoc		Drawn By: