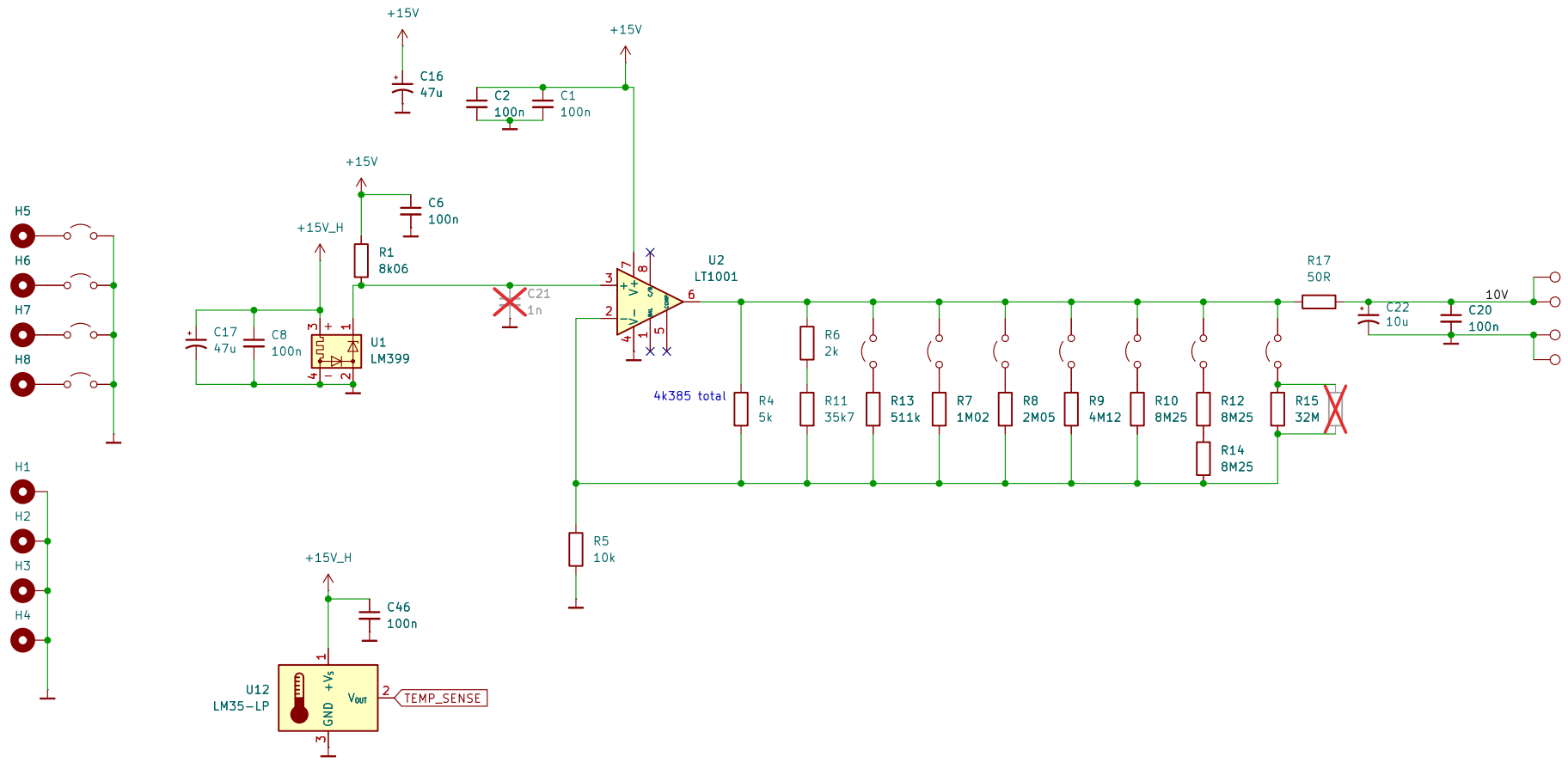

Sheet: /
File: LM399VoltageStandard.kicad_sch

Title:

Size: A4	Date:	Rev:
KiCad E.D.A. 10.0.5		Id: 1/3

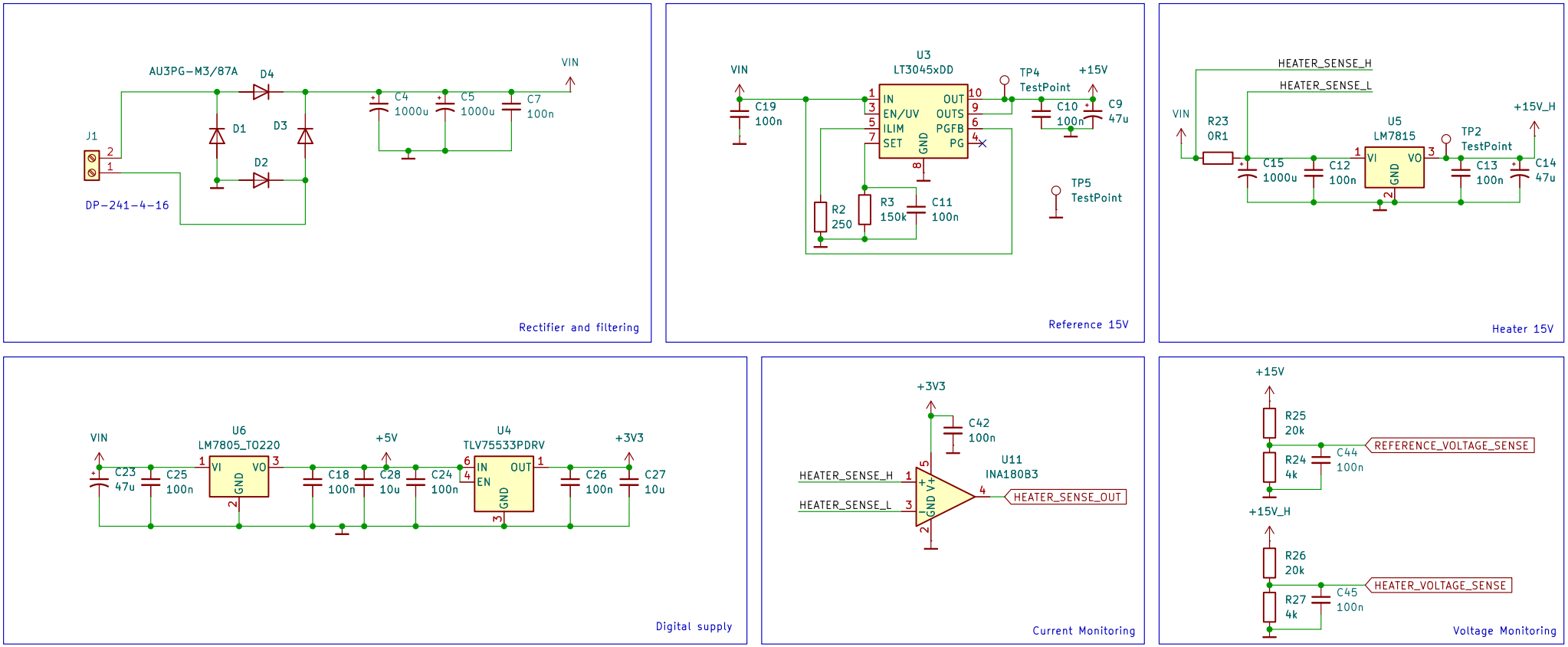

Sheet: /PowerSupply/
File: PowerSupply.kicad_sch

Title:

Size: A4	Date:	Rev:
KiCad E.D.A. 10.0.5		Id: 2/3

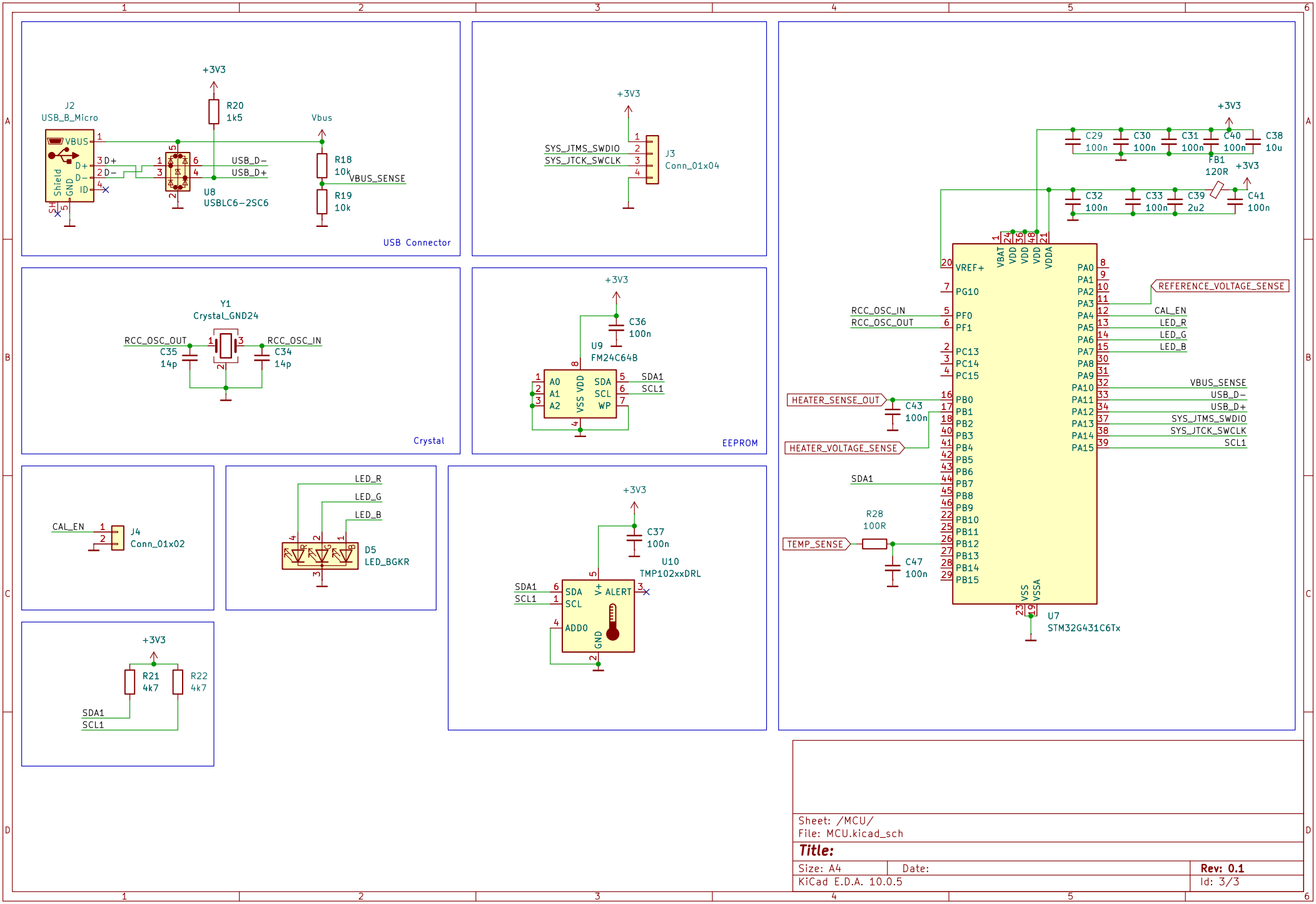

Sheet: /MCU/
File: MCU.kicad_sch

Title:

Size: A4	Date:	**Rev: 0.1**
KiCad E.D.A. 10.0.5		Id: 3/3