Module 2
Circuit and Packet Switching

Why switching?

- A network is a set of connected devices.
- To connect multiple devices - One solution is to make a point-to-point connection between each pair of devices (a mesh topology) or between a central device and every other device (a star topology).
- Impractical and wasteful when applied to very large networks. The number and length of the links require too much infrastructure to be cost-efficient, and the majority of those links would be idle most of the time.
- Other topologies employing multipoint connections, such as a bus, are ruled out - distances between devices and the total number of devices increase beyond the capacities

switching

- A better solution is **switching.**
- A switched network consists of a series of interlinked nodes, called ***switches.*** Switches are devices capable of creating temporary connections between two or more devices linked to the switch. In a switched network, some of these nodes are connected to the end systems (computers or telephones, for example). Others are used only for routing.

Figure 8.1 *Switched network*

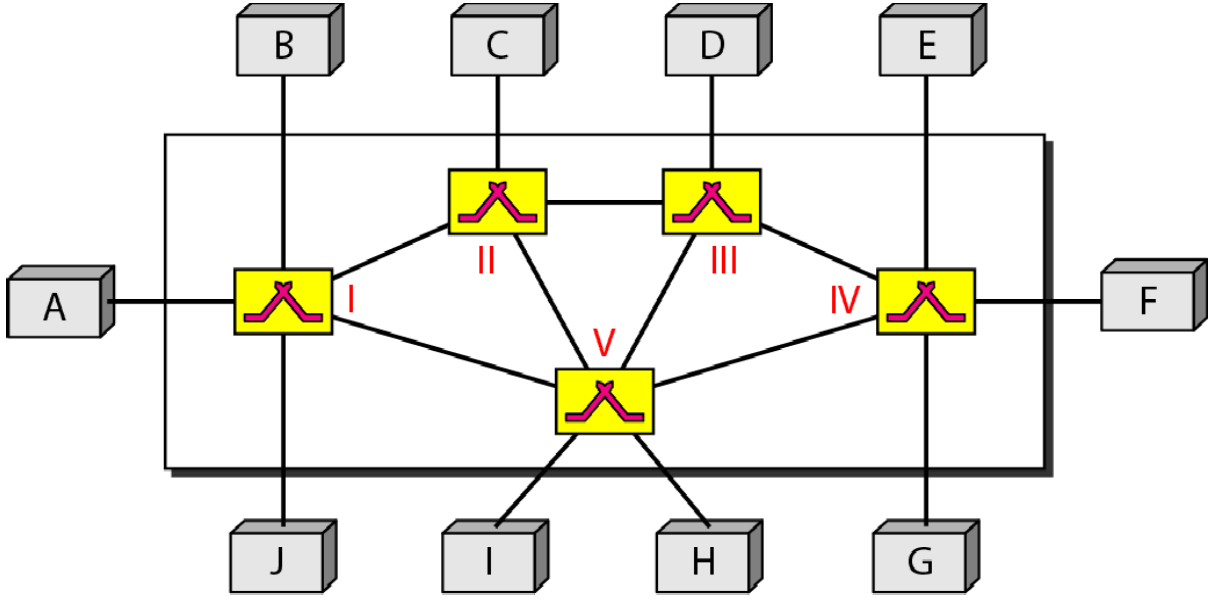

The **end systems** (communicating devices) are labeled A, B, C, D, and so on, and the switches are labeled I, II, III, IV, and V. Each switch is connected to multiple links.

Switched Communications Networks

- Types of switching to be discuss
  - Circuit switching
  - Packet Switching
  - Message Switching

Figure 8.2 *Taxonomy of switched networks*

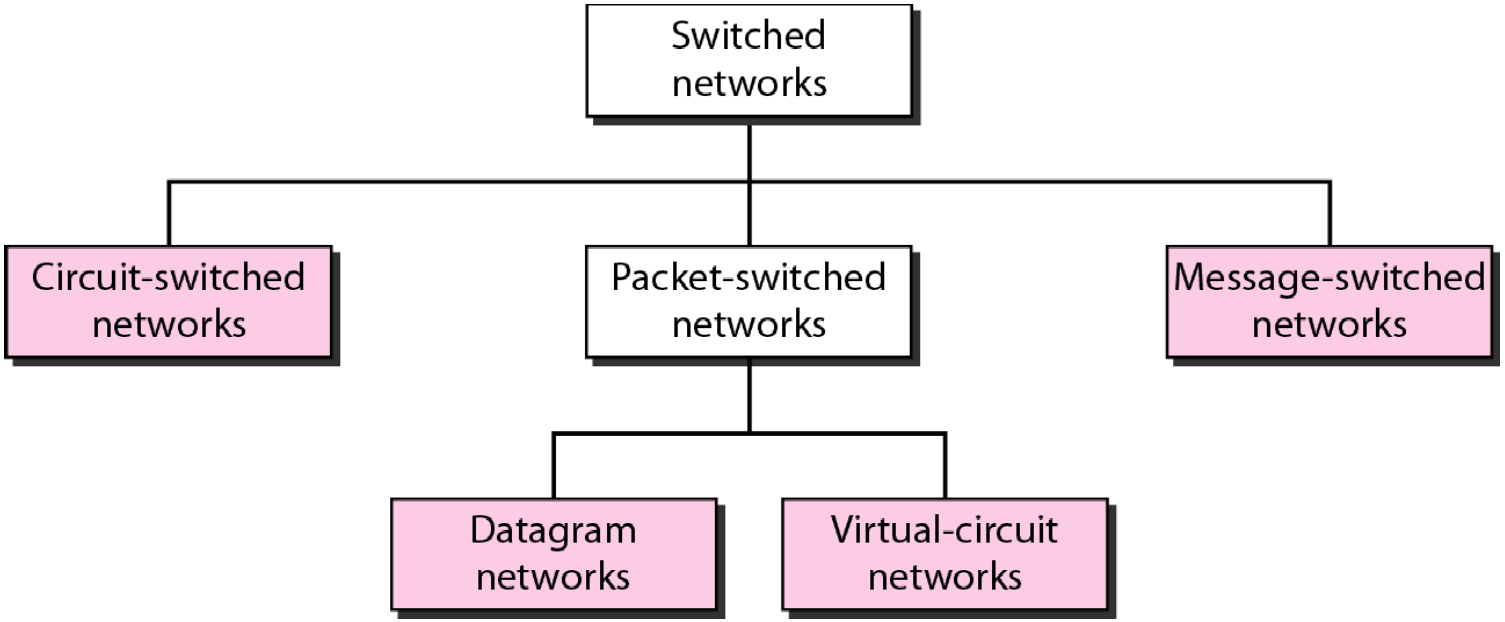

Example for Circuit Switching

- A good example of a **circuit-switched network** is the **early telephone systems** in which the path was established between a caller and a callee when the telephone number of the callee was dialed by the caller.
- When the callee responded to the call, the circuit was established.
- The voice message could now flow between the two parties, in both directions, while all of the connecting devices maintained the circuit.
- When the caller or callee hung up, the circuit was disconnected.

Example for Packet Switching

- The network layer is designed as a packet-switched network.
- Individual datagrams are then transferred from the source to the destination.
- The received datagrams are assembled at the destination before recreating the original message.
- The packet-switched network layer of the Internet was **originally designed as a connectionless service**, but recently there is a tendency to change this to a connection-oriented service.

8-1CIRCUIT-SWITCHED NETWORKS

- ***A circuit-switched network consists of a set of switches <u>connected by physical links</u>.***
- ***A connection between two stations is a dedicated path made of one or more links..***
- ***Each link is normally divided into n channels by using FDM or TDM.***
- ***However, each connection uses only one dedicated channel on each link..***

Note

A circuit-switched network is made of a set of switches connected by physical links, in which each link is divided into *n* channels.

Figure 8.3 *A trivial circuit-switched network*

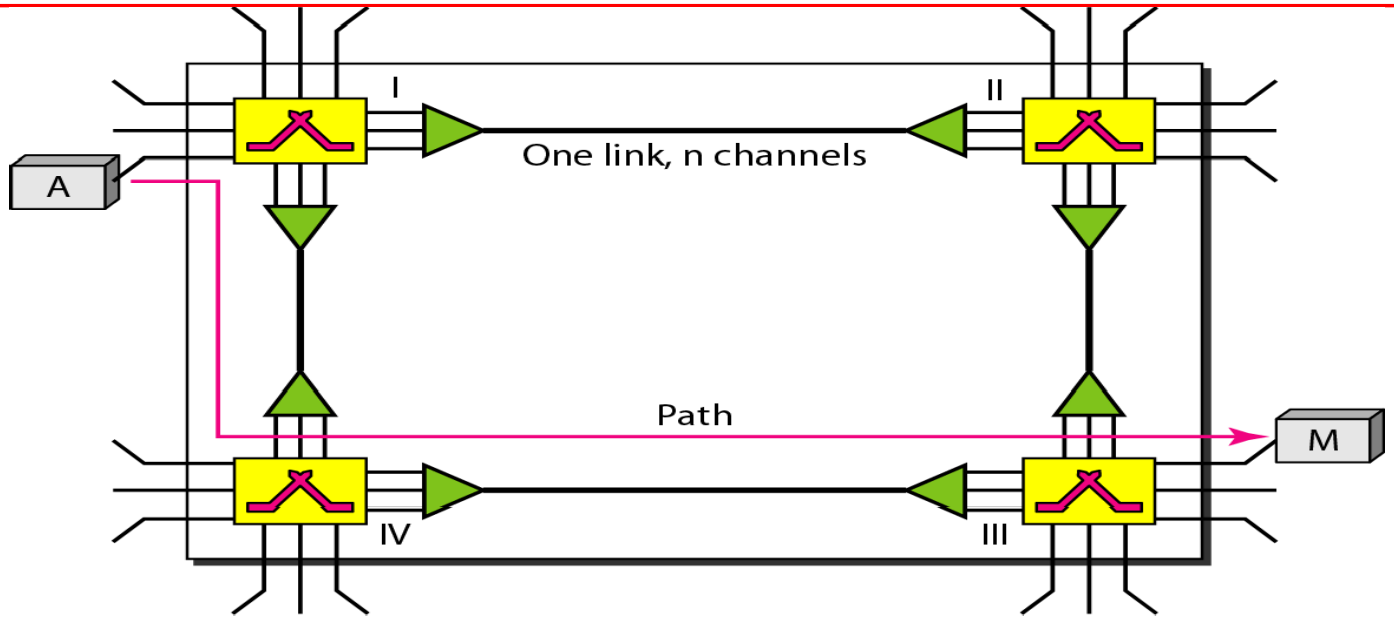

When end system A needs to communicate with end system M, system A needs to request a connection to M that must be accepted by all switches as well as by M itself. This is called the **setup phase;** a circuit (channel) is reserved on each link, and the combination of circuits or channels defines the dedicated path. After the dedicated path made of connected circuits (channels) is established, the **data-transfer phase** can take place. After all data have been transferred, the circuits are torn down.

Note

In circuit switching, the resources need to be reserved during the setup phase; the resources remain dedicated for the entire duration of data transfer until the teardown phase.

Circuit Switching

- Circuit switching takes place at the physical layer
- Before starting communication, the stations must make a reservation for the resources to be used during the communication.
- Data transferred between the two stations are not packetized (physical layer transfer of the signal). The data are a continuous flow sent by the source station and received by the destination station, although there may be periods of silence.
- There is no addressing involved during data transfer. The switches route the data based on their occupied band (FDM) or time slot (TDM). Of course, there is end-to-end addressing used during the setup phase.

Circuit Switching- Phases

- The actual communication in a circuit-switched network requires three phases: connection setup, data transfer, and connection teardown.
- **Setup Phase**
- **Data transfer Phase**
- **Tear down Phase**

Setup Phase

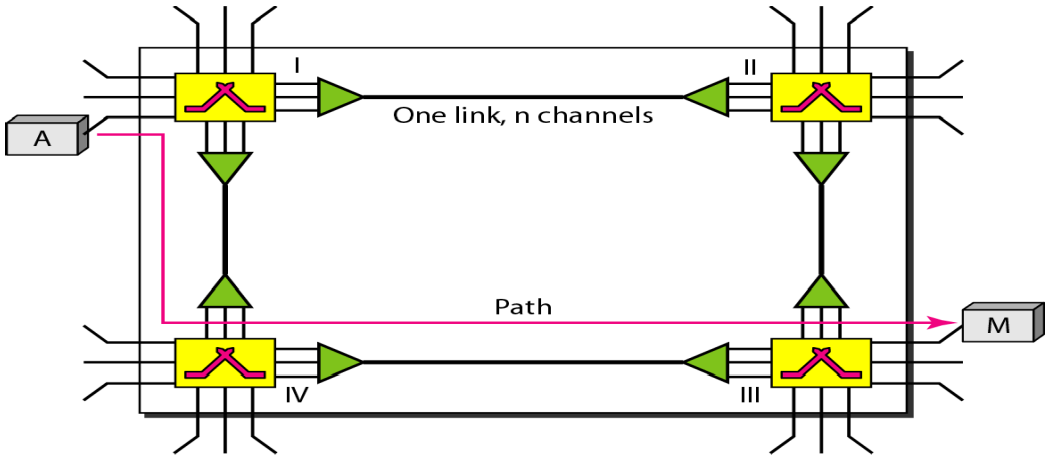

- Before the two parties (or multiple parties in a conference call) can communicate, a dedicated circuit (combination of channels in links) needs to be established. Connection setup means creating dedicated channels between the switches.
- For example, in above Figure, when system A needs to connect to system M, it sends a setup request that includes the address of system M, to switch I. Switch I finds a channel between itself and switch IV that can be dedicated for this purpose.
- Switch I then sends the request to switch IV, which finds a dedicated channel between itself and switch III.
- Switch III informs system M of system A's intention at this time. In the next step to making a connection, an acknowledgment from system M needs to be sent in the opposite direction to system A. Only after system A receives this acknowledgment is the connection established.

- Data Transfer Phase
- After the establishment of the dedicated circuit (channels), the two parties can transfer data.
- Teardown Phase
- When one of the parties needs to disconnect, a signal is sent to each switch to release the resources.

Efficiency & Delay

- **Efficiency**
- It can be argued that circuit-switched networks are not as efficient as the other two types of networks because resources are allocated during the entire duration of the connection. These resources are unavailable to other connections.
- **Delay**
- Although a circuit-switched network normally has low efficiency, the delay in this type of network is minimal. During data transfer the data are not delayed at each switch; the resources are allocated for the duration of the connection. The total delay is due to the time needed to create the connection, transfer data, and disconnect the circuit.
- **Switching at the** physical layer **in the traditional telephone network** uses **the circuit-switching approach.**

Figure 8.6 *Delay in a circuit-switched network*

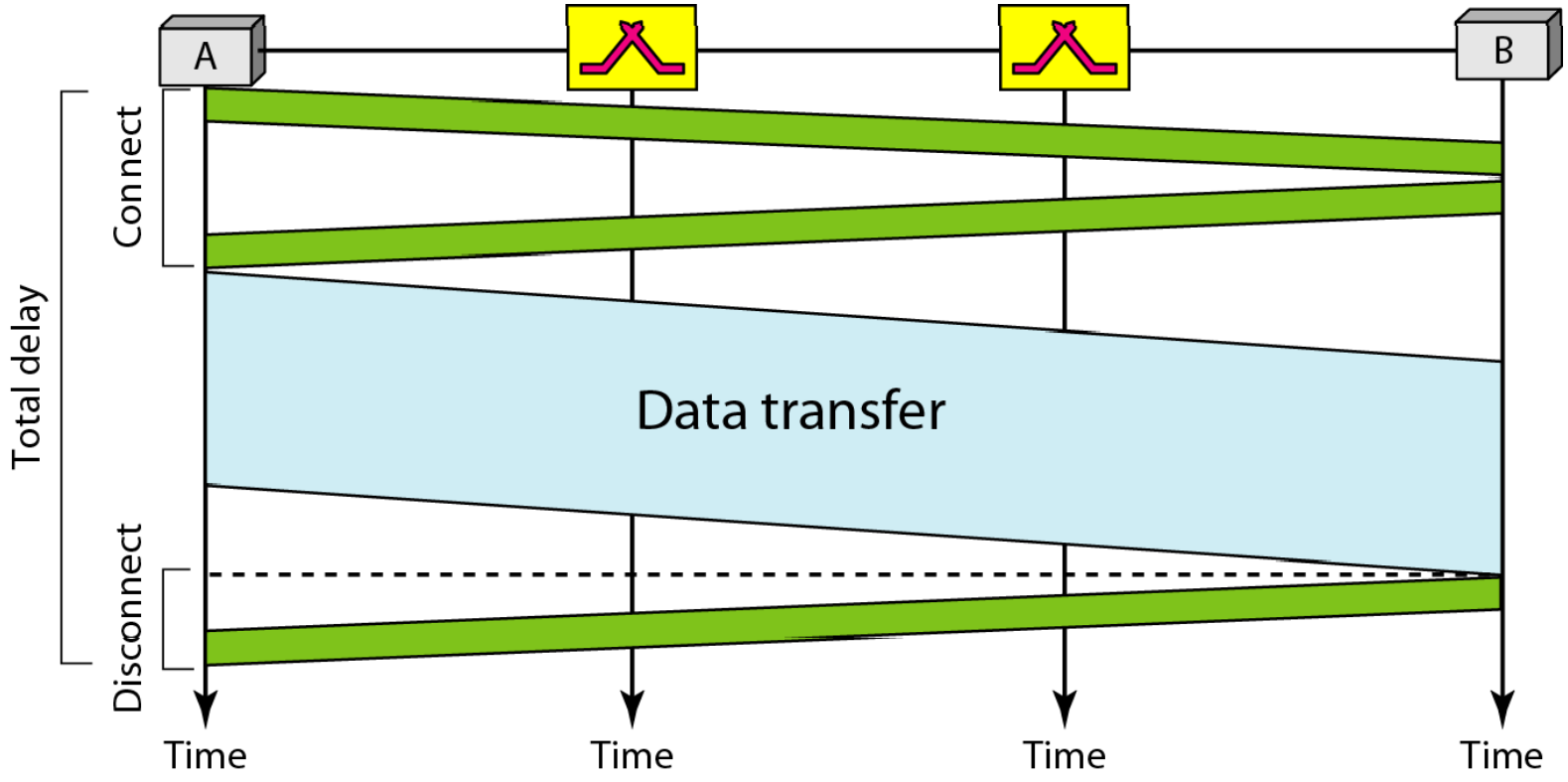

Circuit Switching- Technology in Telephone Networks

- The telephone companies have previously chosen the circuit switched approach to switching in the physical layer; today the tendency is moving toward other switching techniques.

- For example, the telephone number is used as the global address, and a signaling system (called SS7) is used for the setup and teardown phases.

Example

As a trivial example, let us use a circuit-switched network to connect eight telephones in a small area. Communication is through 4-kHz voice channels. We assume that each link uses FDM to connect a maximum of two voice channels. The bandwidth of each link is then 8 kHz.

Telephone 1 is connected to telephone 7; 2 to 5; 3 to 8; and 4 to 6. Of course the situation may change when new connections are made. The switch controls the connections.

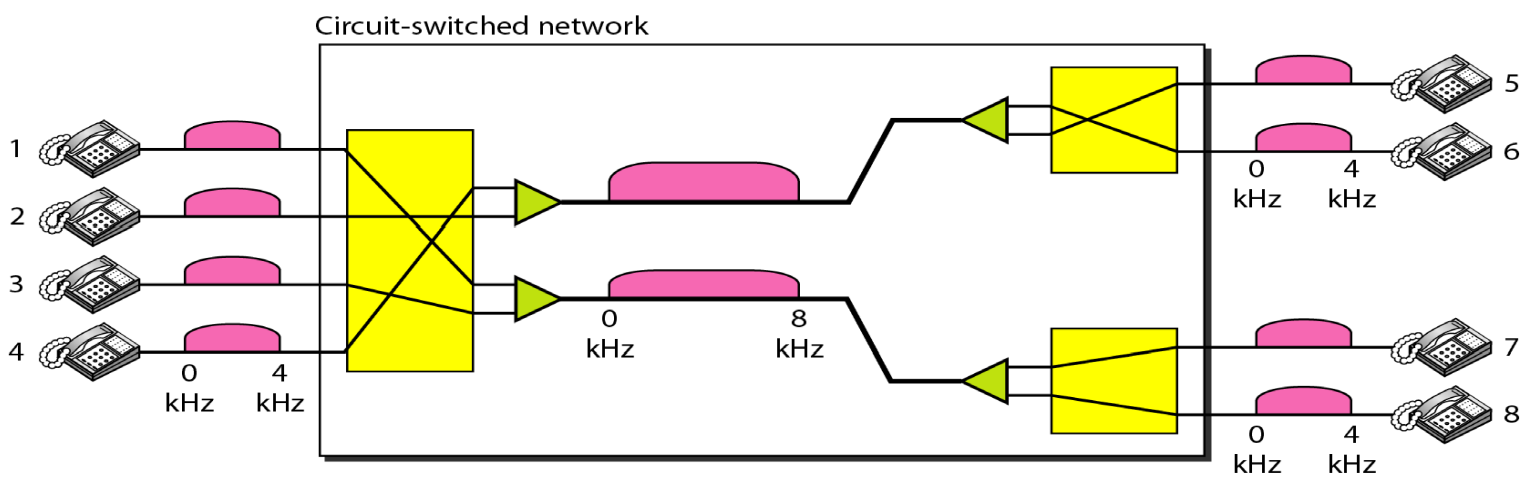

Figure 8.4 *Circuit-switched network used in Example 8.1*

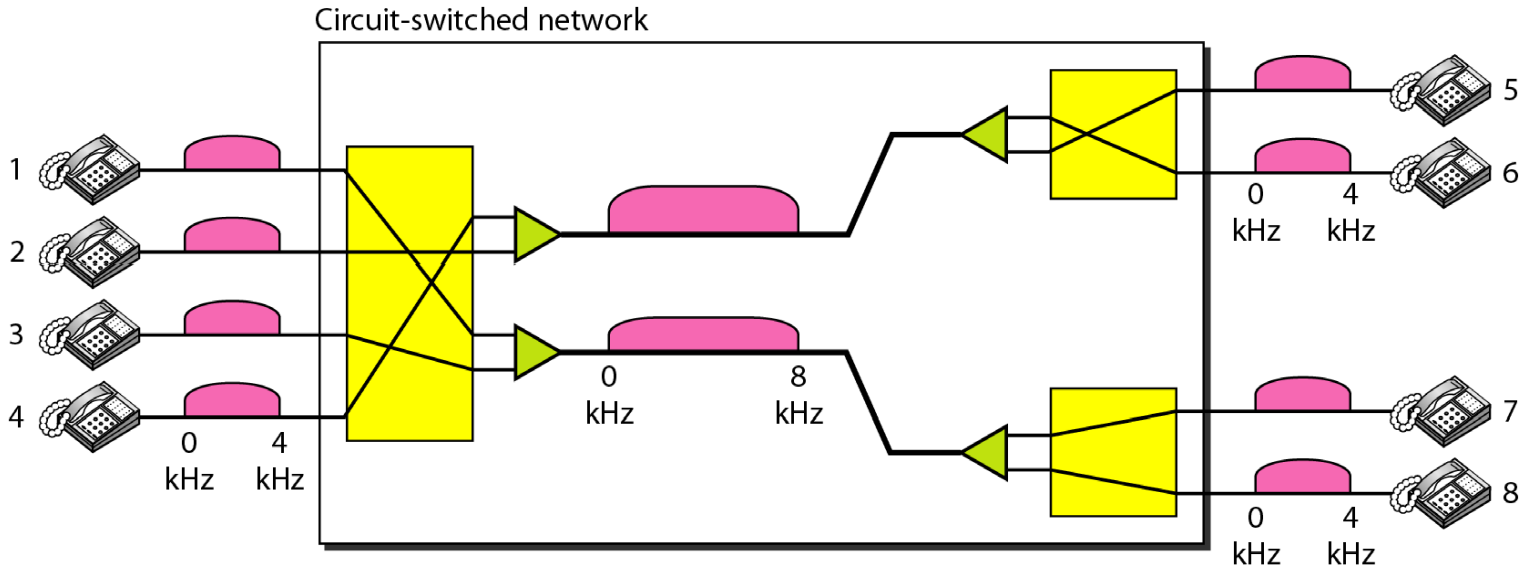

Example 8.2

As another example, consider a circuit-switched network that connects computers in two remote offices of a private company. The offices are connected using a T-1 line leased from a communication service provider. There are two 4 × 8 (4 inputs and 8 outputs) switches in this network. For each switch, four output ports are folded into the input ports to allow communication between computers in the same office. Four other output ports allow communication between the two offices. Figure 8.5 shows the situation.

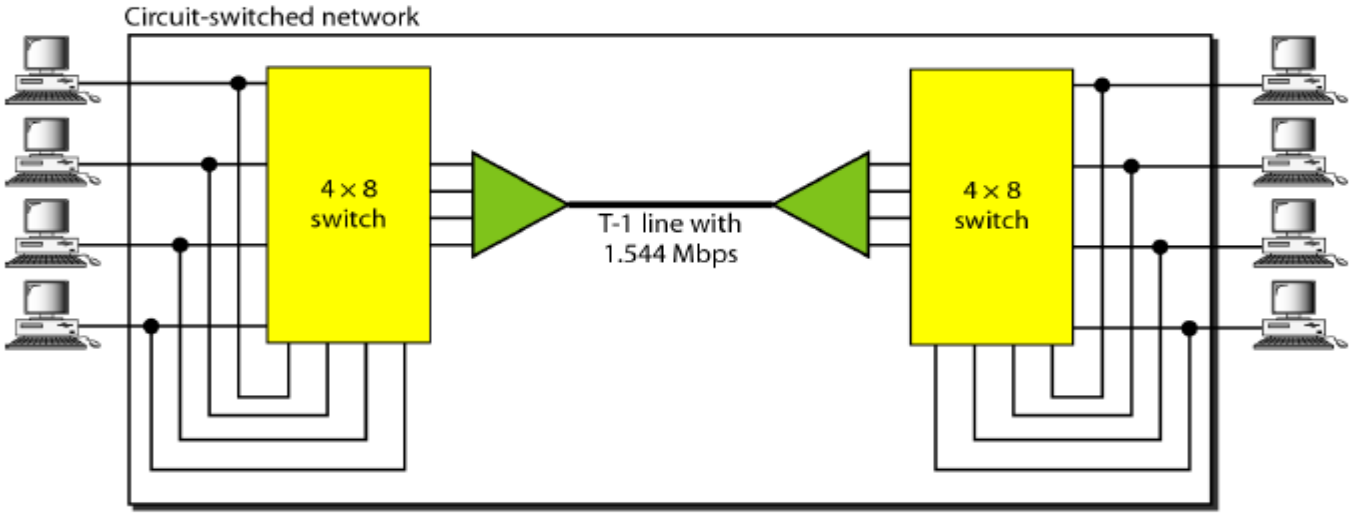

Packet Switching

- If the message is going to pass through a **packet-switched network**, it needs to be divided into packets of fixed or variable size. The size of the packet is determined by the network and the governing protocol.
- In packet switching, there is no resource allocation for a packet. This means that there is no reserved bandwidth on the links, and there is no scheduled processing time for each packet. Resources are allocated on demand.
- The allocation is done on a first come, first-served basis. When a switch receives a packet, no matter what the source or destination is, the packet must wait if there are other packets being processed.
- Packet switching features deliver **variable-bit-rate data streams (sequences of packets)** over a shared network.

Note

In a packet-switched network, there is no resource reservation; resources are allocated on demand.

Two major packet switching modes exist

1. Connectionless packet switching, also known as **datagram switching**
2. Connection-oriented packet switching, also known as **virtual circuit switching**.

- In the first case each packet includes complete addressing or routing information. The packets are routed individually, sometimes resulting in different paths and out-of-order delivery. The forwarding decision is based on the destination address of the packet
- In the second case a connection is defined and pre allocated in each involved node during a connection phase before any packet is transferred. The forwarding decision is based on the label of the packet.

Connectionless Packet Switching Network-Datagram Switching

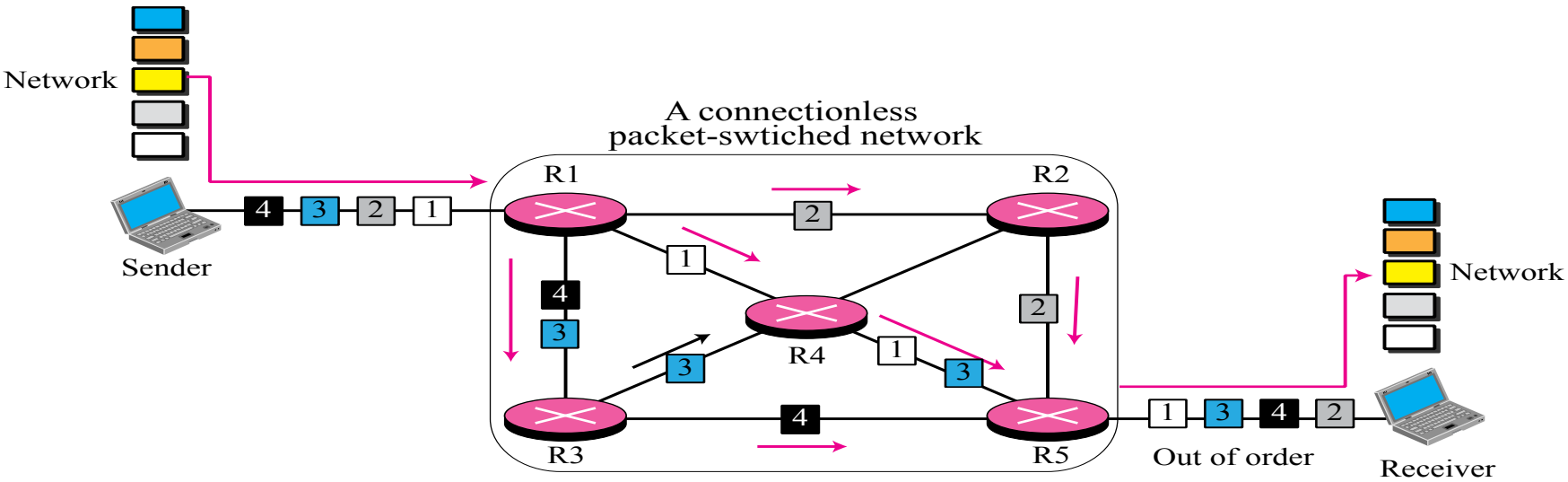

Forwarding Process in Connectionless Network-Datagram Switching

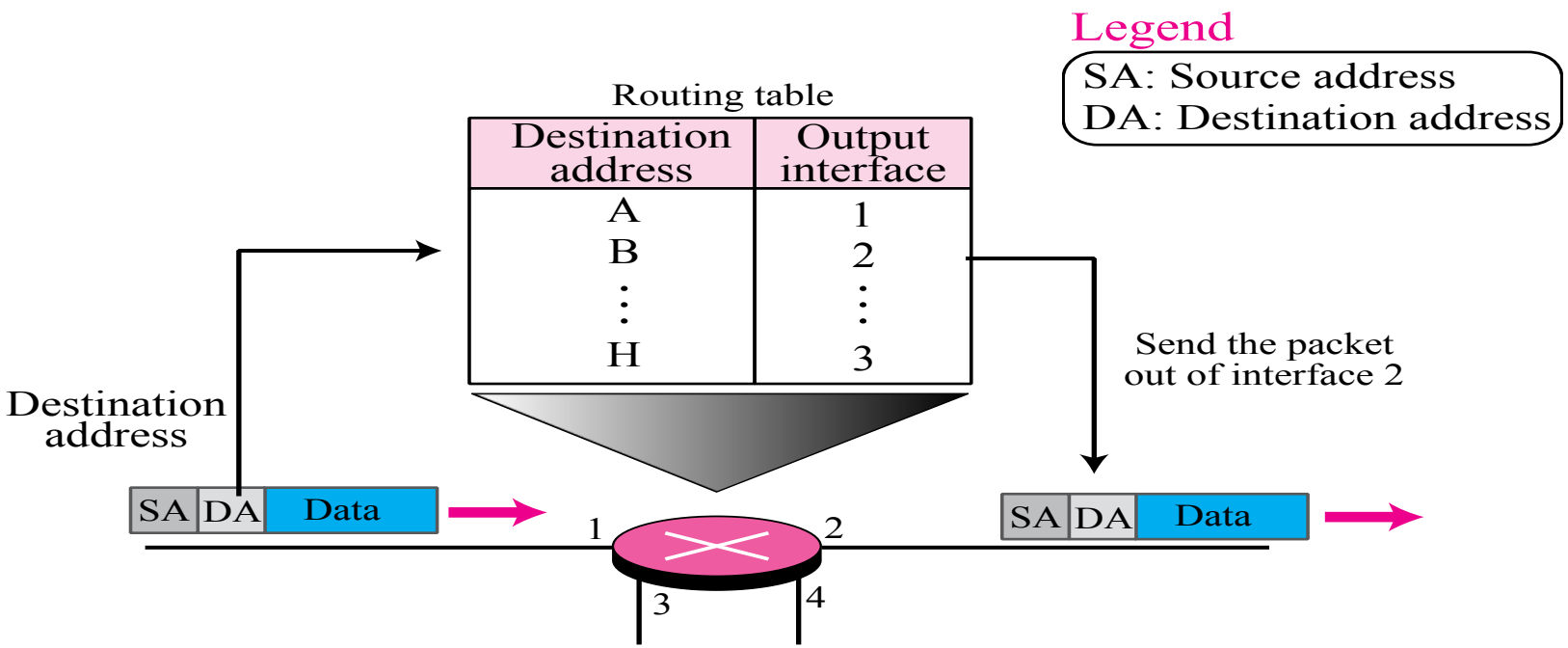

In this type of network, each switch (or packet switch) has a routing table which is based on the destination address.

The routing tables are dynamic and are updated periodically.

The destination addresses and the corresponding forwarding output ports are recorded in the tables.

Note

A switch in a datagram network uses a routing table that is based on the destination address.

Note

The destination address in the header of a packet in a datagram network remains the same during the entire journey of the packet.

The datagram networks are sometimes referred to as *connectionless networks*.

The term *connectionless* here means that the switch (packet switch) does not keep information about the connection state. There are no setup or teardown phases. Each packet is treated the same by a switch regardless of its source or destination.

Delay in Connectionless Network
Datagram switching

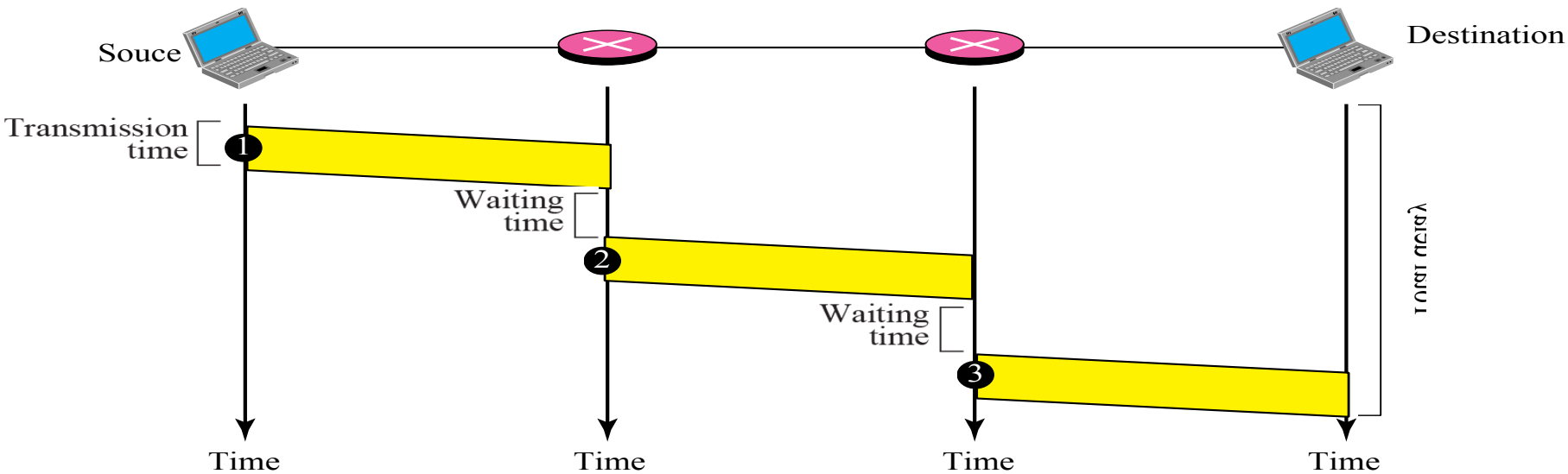

The packet travels through two switches. There are three transmission times (3*T*), three propagation delays (slopes 3τ of the lines), and two waiting times (*w*1 + *w*2).

. The total delay is $$\text{Total delay} = 3T + 3\tau + w_1 + w_2$$

Efficiency

The efficiency of a datagram network is better than that of a circuit-switched network; resources are allocated only when there are packets to be transferred.

Delay

There may be greater delay in a datagram network than in a virtual-circuit network.

Although there are no setup and teardown phases, each packet may experience a wait at a switch before it is forwarded.

In addition, since not all packets in a message necessarily travel through the same switches, the delay is not uniform for the packets of a message.

A Connection Oriented Packet Switched Network – Virtual Circuit

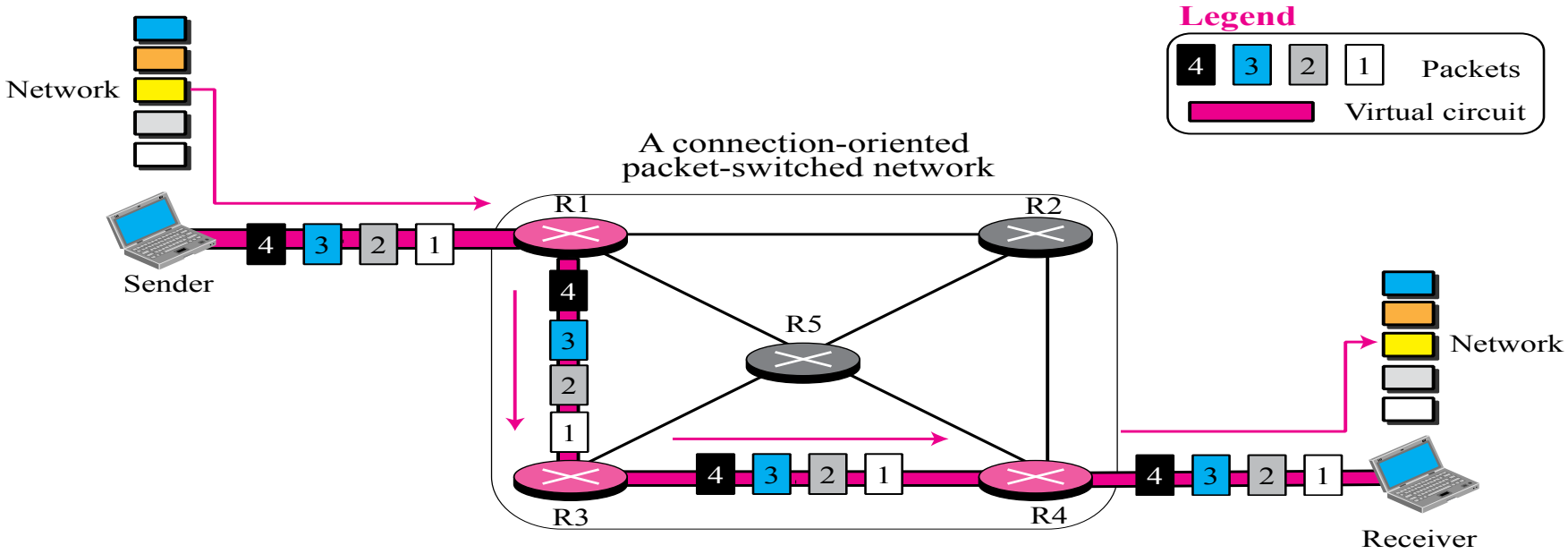

A **virtual-circuit network** is a cross between a circuit-switched network and a datagram network

Addressing

In a virtual-circuit network, two types of addressing are involved: global and local (virtual-circuit identifier).

Global Addressing

A source or a destination needs to have a global address

Virtual-Circuit Identifier

The identifier that is actually used for data transfer is called the ***virtual-circuit identifier* (VCI)** or the ***label*.** A VCI, unlike a global address, is a small number that has only switch scope; it is used by a frame between two switches. When a frame arrives at a switch, it has a VCI; when it leaves, it has a different VCI.

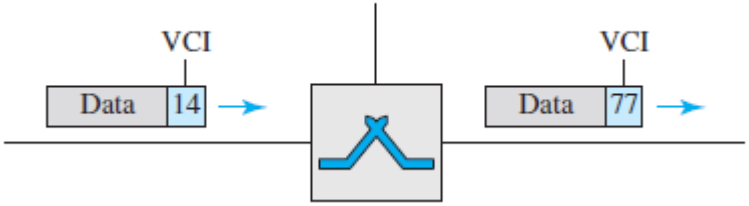

Three Phases

As in a circuit-switched network, a source and destination need to go through three phases in a virtual-circuit network: setup, data transfer, and teardown.

In the setup phase, the source and destination use their addresses to help switches make table entries for the connection.

In the teardown phase, the source and destination inform the switches to delete the corresponding entry.

Data transfer occurs between these two phases.

Forwarding Process in a Connection oriented Network – Virtual circuiting

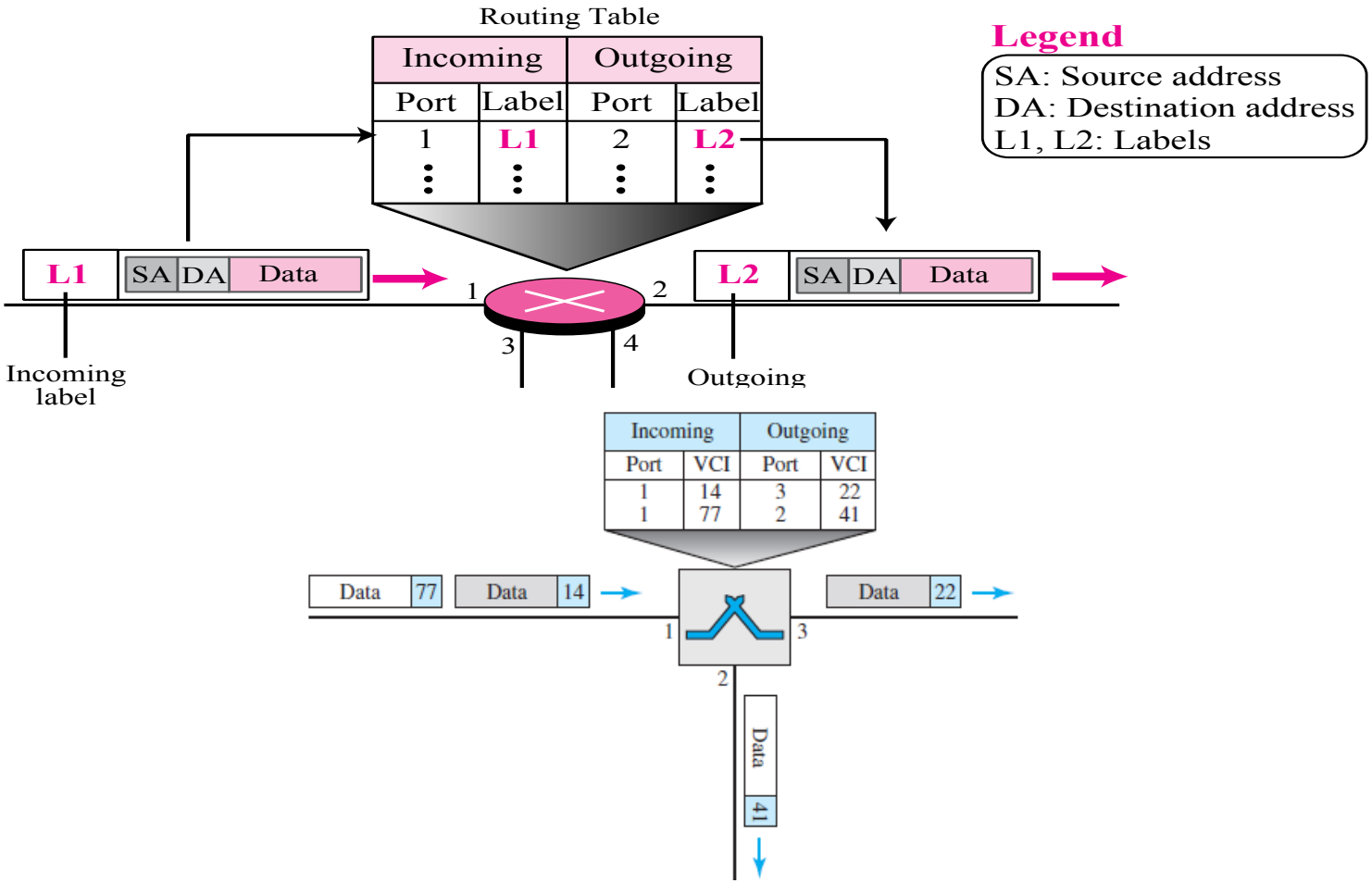

Figure 8.13 *Source-to-destination data transfer in a virtual-circuit network*

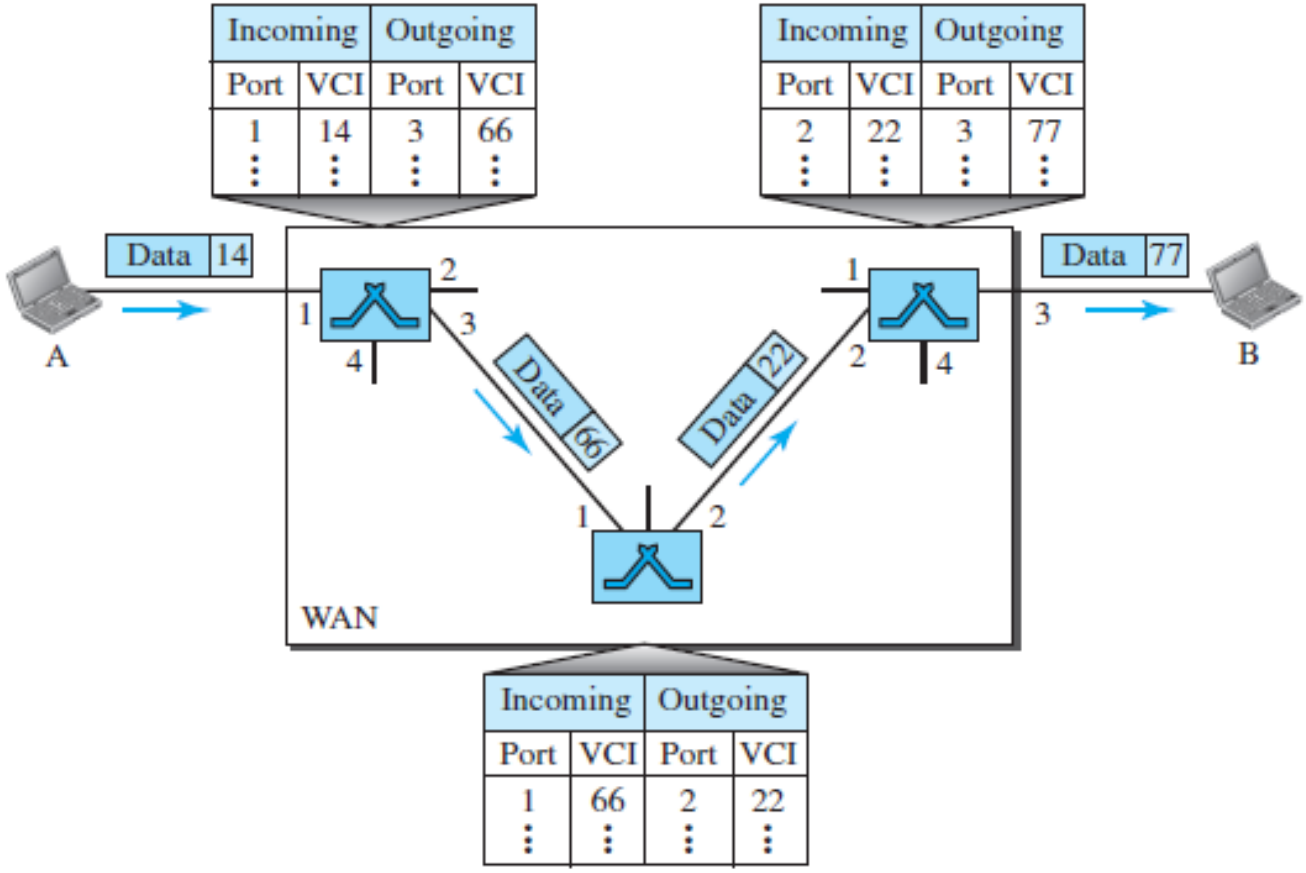

Setup Phase

In the setup phase, a switch creates an entry for a virtual circuit. For example, suppose source A needs to create a virtual circuit to B.

Two steps are required: the setup request and the acknowledgment.

Figure 8.14 *Setup request in a virtual-circuit network*

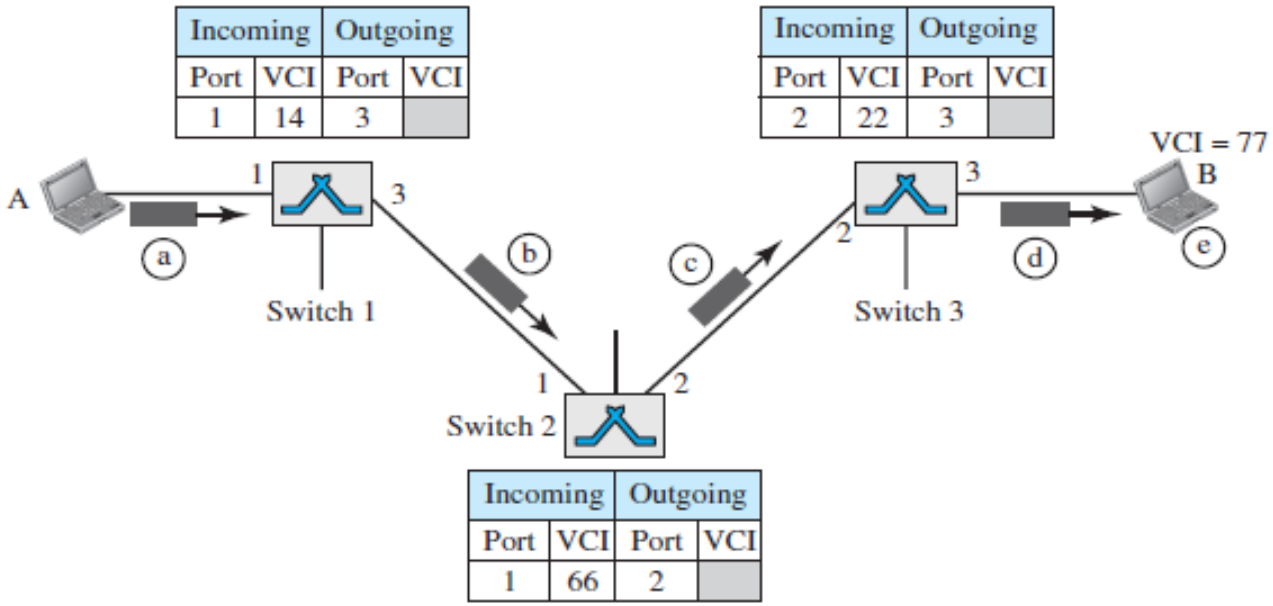

Acknowledgment

A special frame, called the *acknowledgment frame*, completes the entries in the switching tables.

Figure 8.15 *Setup acknowledgment in a virtual-circuit network*

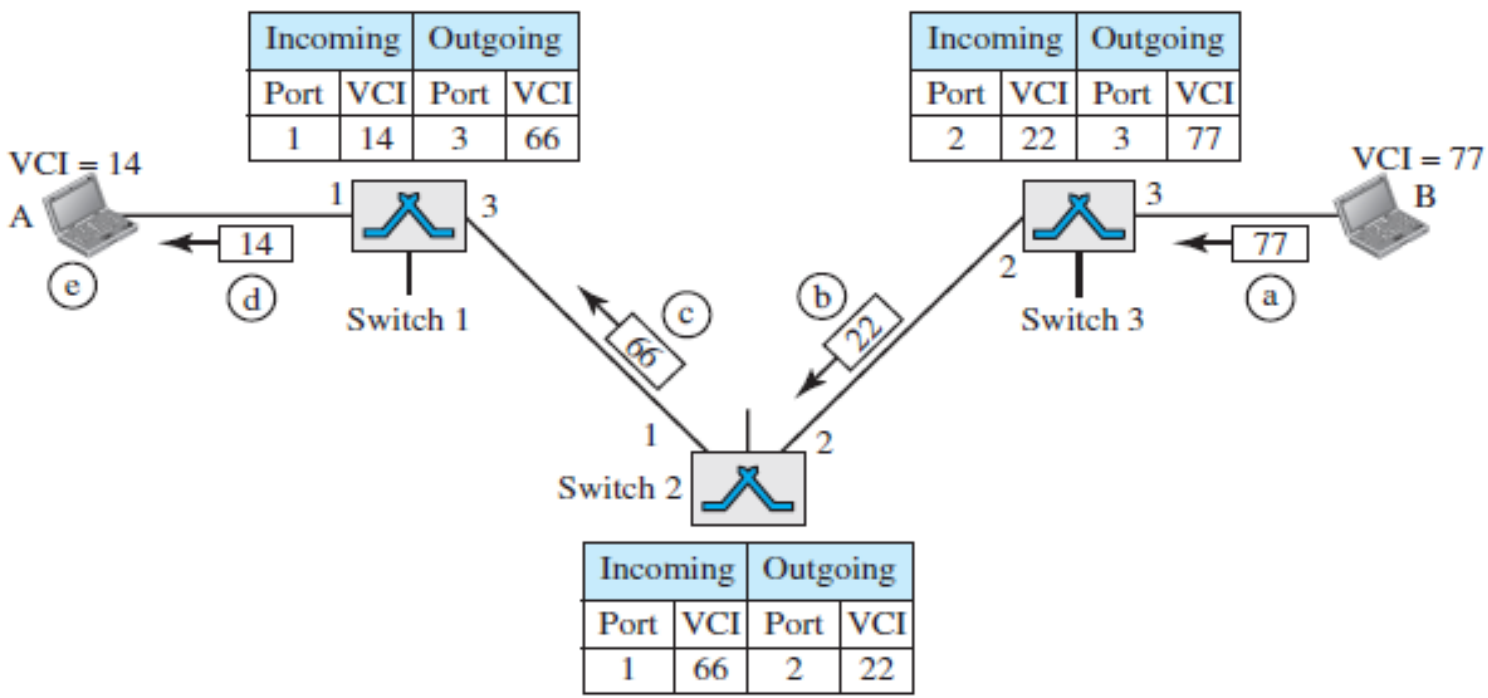

Efficiency

In virtual-circuit switching, all packets belonging to the same source and destination travel the same path; but the packets may arrive at the destination with different delays if resource allocation is on demand.

delay

Figure 8.16 *Delay in a virtual-circuit network*

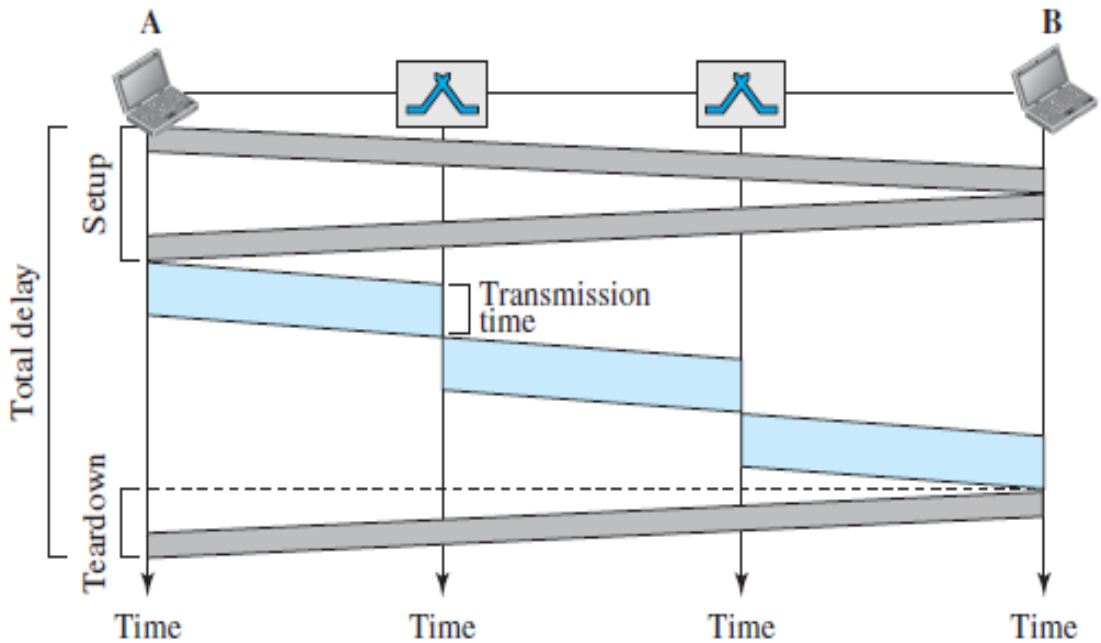

- There are three transmission times ($3T$), three propagation times (3τ), data transfer depicted by the sloping lines, a setup delay (which includes transmission and propagation in two directions), and a teardown delay (which includes transmission and propagation in one direction).
- The total delay time is $3T + 3\tau + \text{setup delay} + \text{teardown delay}$

Comparison of Circuit Switching and Packet Switching

Circuit Switching	Packet Switching
Circuit switching is a method that is used when a dedicated channel or circuit needs to be established.	Packet switching is a method of grouping data which is transmitted over a digital network into packets. Each packet routed independently
It was initially designed for voice transfer.	It was initially designed for data transfer
It is implemented at Physical Layer.	It is implemented at Network Layer.
In-Circuit switching, data is processed and transmitted at the source only.	In packet switching, data is processed and transmitted, not only at the source but also switches.
Reserve the entire Bandwidth in advance.	Never reserves the Bandwidth.
In-circuit switching each packet follows the same route.	In packet switching packets can follow any route.

Implementing Network Software

SOCKET PROGRAMMING

3-4 TRANSMISSION IMPAIRMENT

Signals travel through transmission media, which are not perfect. The imperfection causes signal impairment. This means that the signal at the beginning of the medium is not the same as the signal at the end of the medium. What is sent is not what is received. Three causes of impairment are attenuation, distortion, and noise.

Topics discussed in this section:

- **Attenuation**
- **Distortion**
- **Noise**

Figure 3.25 *Causes of impairment*

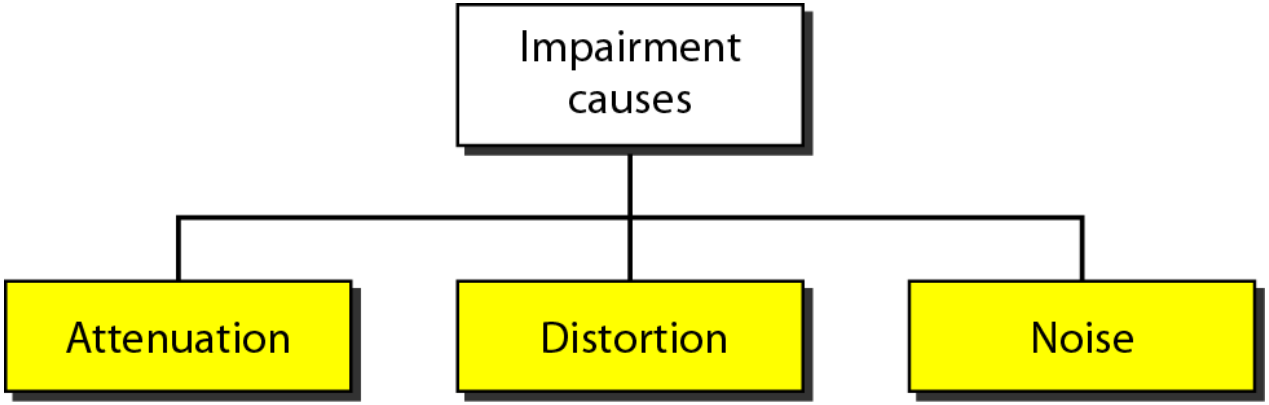

Attenuation

- Means loss of energy -> weaker signal
- When a signal travels through a medium it loses energy overcoming the resistance of the medium
- Amplifiers are used to compensate for this loss of energy by amplifying the signal.

Measurement of Attenuation

- To show the loss or gain of energy the unit "decibel" is used.

$$dB = 10\log_{10}P_2/P_1$$

P_1 - input signal

P_2 - output signal

Figure 3.26 *Attenuation*

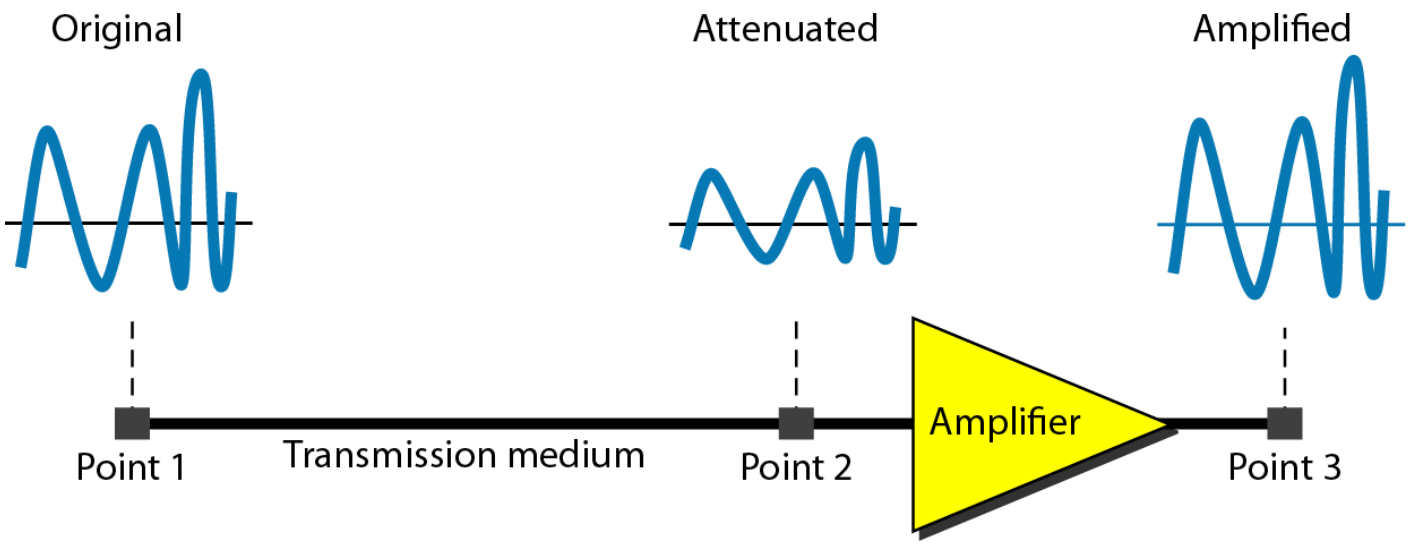

Example 3.26

Suppose a signal travels through a transmission medium and its power is reduced to one-half. This means that P_2 is $(1/2)P_1$. In this case, the attenuation (loss of power) can be calculated as

$$10 \log_{10} \frac{P_2}{P_1} = 10 \log_{10} \frac{0.5 P_1}{P_1} = 10 \log_{10} 0.5 = 10(-0.3) = -3 \text{ dB}$$

A loss of 3 dB (–3 dB) is equivalent to losing one-half the power.

Example 3.27

A signal travels through an amplifier, and its power is increased 10 times. This means that $P_2 = 10P_1$. In this case, the amplification (gain of power) can be calculated as

$$10 \log_{10} \frac{P_2}{P_1} = 10 \log_{10} \frac{10P_1}{P_1}$$

$$= 10 \log_{10} 10 = 10(1) = 10 \text{ dB}$$

Distortion

- Means that the signal changes its form or shape
- Distortion occurs in composite signals
- Each frequency component has its own propagation speed traveling through a medium.
- The different components therefore arrive with different delays at the receiver.
- That means that the signals have different phases at the receiver than they did at the source.

Noise

- There are different types of noise
  - Thermal - random noise of electrons in the wire creates an extra signal
  - Induced - from motors and appliances, devices act are transmitter antenna and medium as receiving antenna.
  - Crosstalk - same as above but between two wires.
  - Impulse - Spikes that result from power lines, lightning, etc.

Figure 3.29 *Noise*

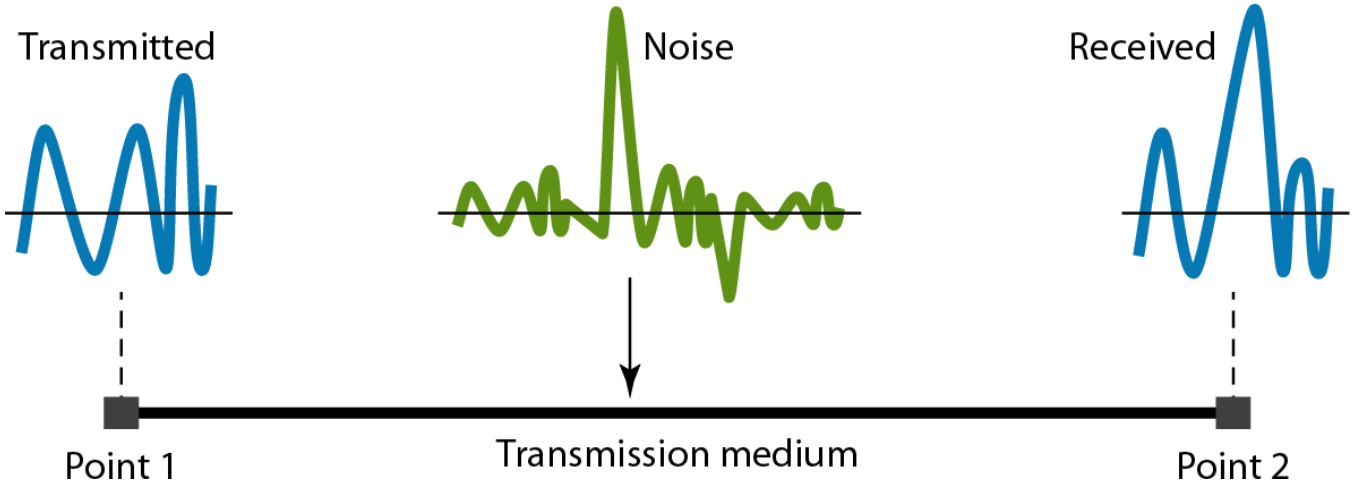

3-5 DATA RATE LIMITS

A very important consideration in data communications is how fast we can send data, in bits per second, over a channel. Data rate depends on three factors:

1. The bandwidth available
2. The level of the signals we use
3. The quality of the channel (the level of noise)

Two theoretical formulas were developed to calculate the data rate:

1. Nyquist theorem for a noiseless channel
2. Shannon therorem for a noisy channel.

Nyquist Theorem

Nyquist gives the upper bound for the bit rate of a transmission system calculating the bit rate directly from the number of bits in a symbol (or signal levels) and the bandwidth of the system (assuming 2 symbols/per cycle and first harmonic). Nyquist theorem states that for a noiseless channel:

$$C = 2\ B \log_2 2^n$$

C= capacity in bps

B = bandwidth in Hz

2^n = signal levels

Example 3.34

Consider a noiseless channel with a bandwidth of 3000 Hz transmitting a signal with two signal levels. The maximum bit rate can be calculated as

$$\boxed{\text{BitRate} = 2 \times 3000 \times \log_2 2 = 6000 \text{ bps}}$$

Example 3.35

Consider the same noiseless channel transmitting a signal with four signal levels (for each level, we send 2 bits). The maximum bit rate can be calculated as

$$\text{BitRate} = 2 \times 3000 \times \log_2 4 = 12{,}000 \text{ bps}$$

Shannon's Theorem

Shannon's theorem gives the capacity of a system in the presence of noise.

$$C = B \log_2(1 + SNR)$$

Example 3.37

Consider an extremely noisy channel in which the value of the signal-to-noise ratio is almost zero. In other words, the noise is so strong that the signal is faint. For this channel the capacity C is calculated as

$$C = B \log_2 (1 + \text{SNR}) = B \log_2 (1 + 0) = B \log_2 1 = B \times 0 = 0$$

This means that the capacity of this channel is zero regardless of the bandwidth. In other words, we cannot receive any data through this channel.

Example 3.38

We can calculate the theoretical highest bit rate of a regular telephone line. A telephone line normally has a bandwidth of 3000. The signal-to-noise ratio is usually 3162. For this channel the capacity is calculated as

$$C = B \log_2 (1 + \text{SNR}) = 3000 \log_2 (1 + 3162) = 3000 \log_2 3163$$
$$= 3000 \times 11.62 = 34{,}860 \text{ bps}$$

This means that the highest bit rate for a telephone line is 34.860 kbps.

3-6 PERFORMANCE

One important issue in networking is the performance of the network—how good is it?

- **Bandwidth - capacity of the system**
- **Throughput - no. of bits that can be pushed through**
- **Latency (Delay) - delay incurred by a bit from start to finish**