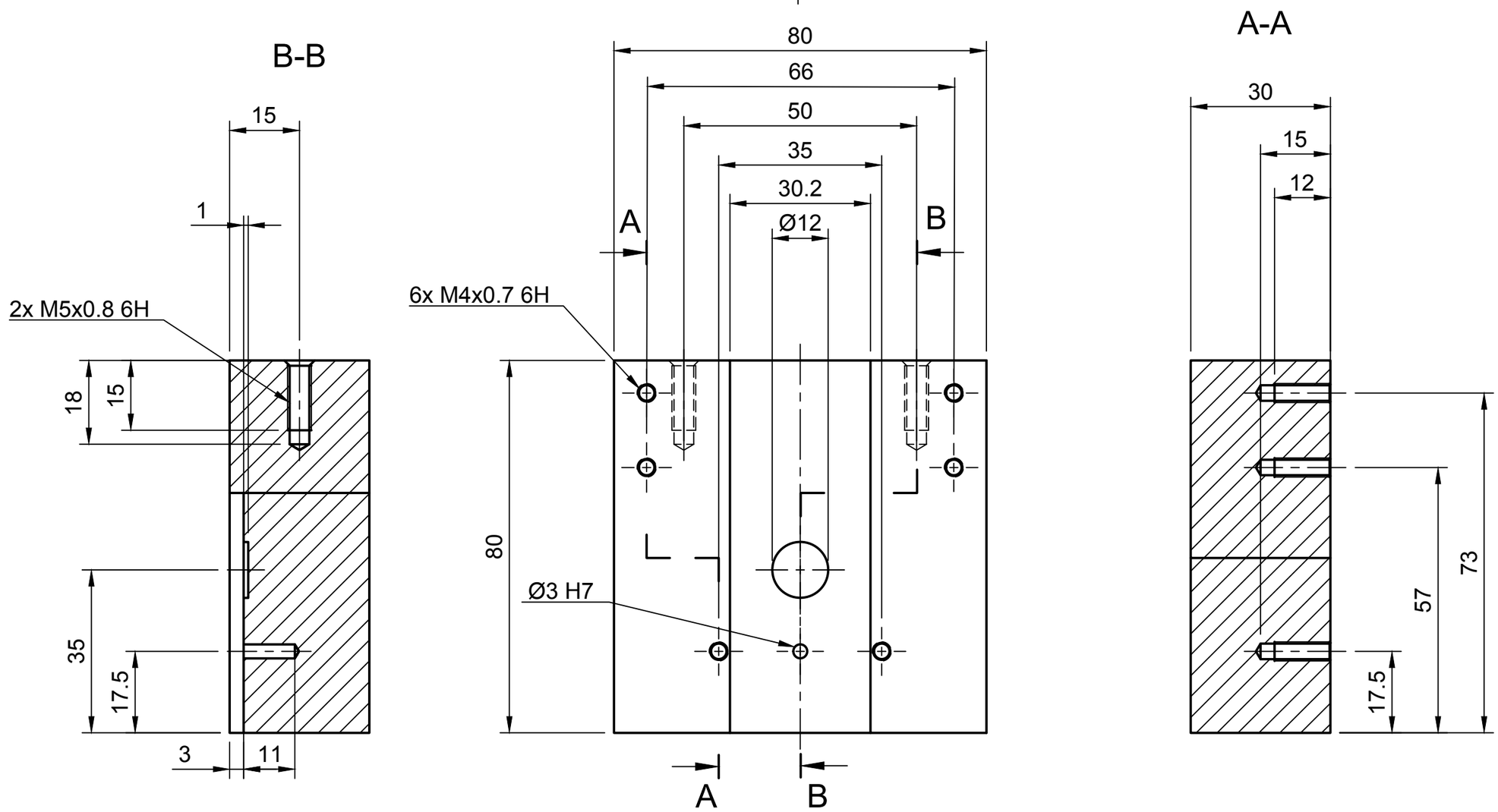

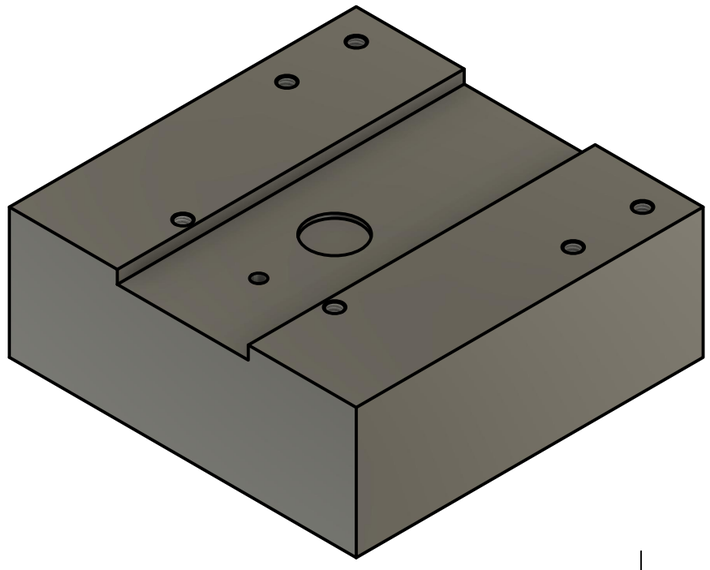

General tolerances as per DIN ISO 2768-f.

Dept.	Technical reference Mat: Steel	Created by Seed Mint 19.06.21	Approved by
		Document type	Document status
		Title Base	DWG No.
			Rev. V10 / Date of issue / Sheet 1/1