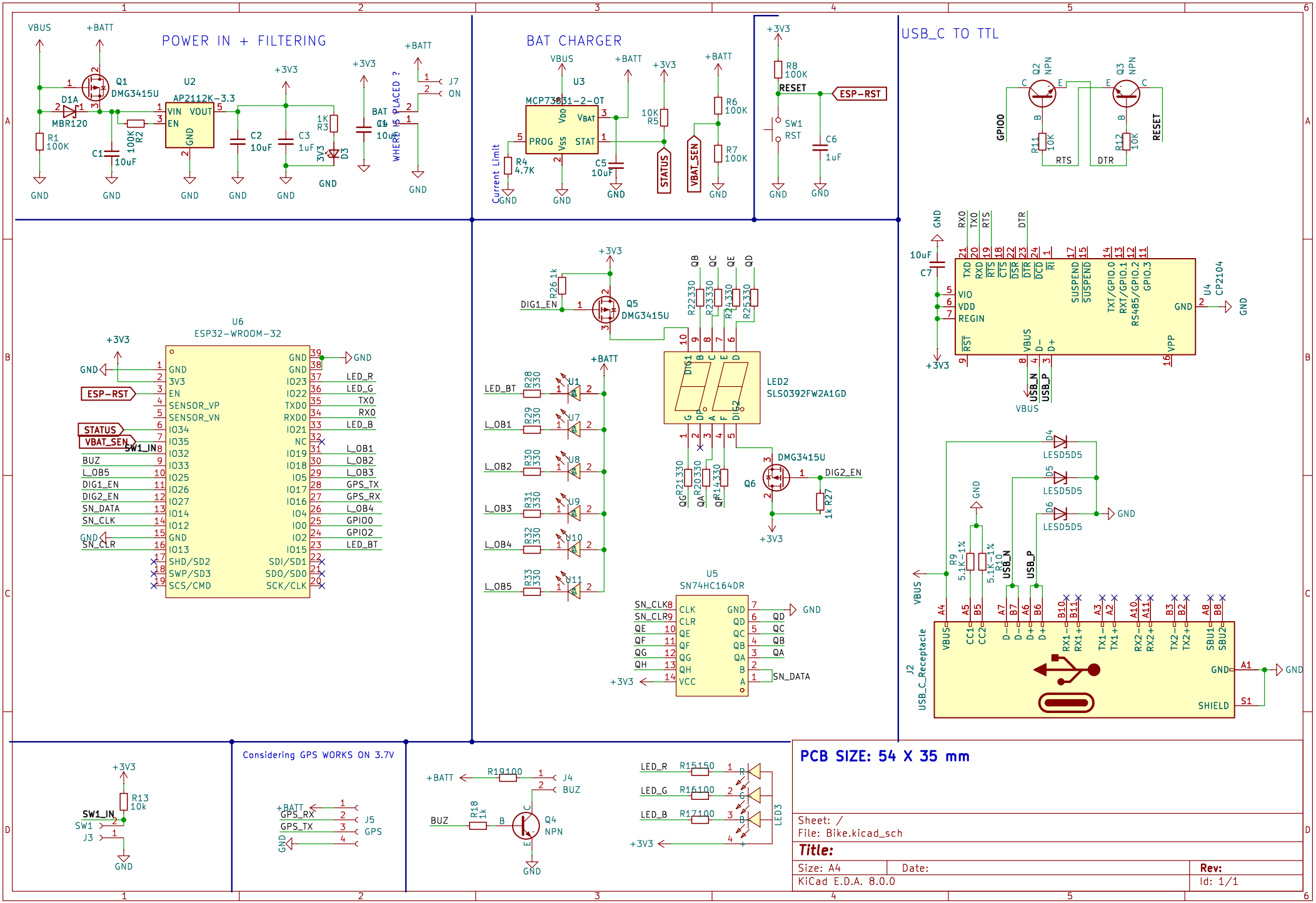
POWER IN + FILTERING
VBUS
+BATT
Q1
DMG3415U
D1A
MBR120
R1
100K
C1
10uF
R2
100K
U2
AP2112K-3.3
VIN
VOUT
EN
GND
C2
10uF
C3
1uF
+3V3
1K
R3
D3
3V3
BAT
C4
10uF
WHERE IS PLACED ?
J7
ON
GND
BAT CHARGER
U3
MCP73831-2-OT
VDD
VBAT
PROG
VSS
STAT
Current Limit
R4
4.7K
C5
10uF
10K
R5
STATUS
VBAT_SEN
R6
100K
R7
100K
R8
100K
RESET
ESP-RST
SW1
RST
C6
1uF
USB_C TO TTL
Q2
NPN
Q3
NPN
GPIO0
R11
10K
RTS
DTR
R12
10K
RESET
10uF
C7
CP2104
U4
VIO
VDD
REGIN
RST
VBUS
D-
D+
TXD
RXD
RTS
CTS
DSR
DTR
DCD
RI
SUSPEND
TXT/GPIO.0
RXT/GPIO.1
RS485/GPIO.2
GPIO.3
GND
VPP
USB_N
USB_P
U6
ESP32-WROOM-32
GND
3V3
EN
SENSOR_VP
SENSOR_VN
IO34
IO35
IO32
IO33
IO25
IO26
IO27
IO14
IO12
IO13
SHD/SD2
SWP/SD3
SCS/CMD
IO23
IO22
TXD0
RXD0
IO21
NC
IO19
IO18
IO5
IO17
IO16
IO4
IO0
IO2
IO15
SDI/SD1
SDO/SD0
SCK/CLK
LED_R
LED_G
TX0
RX0
LED_B
L_OB1
L_OB2
L_OB3
GPS_TX
GPS_RX
L_OB4
GPIO0
GPIO2
LED_BT
L_OB5
BUZ
DIG1_EN
DIG2_EN
SN_DATA
SN_CLK
SN_CLR
ESP-RST
STATUS
VBAT_SEN
SW1_IN
Q5
DMG3415U
R26
1k
R22
330
R23
330
R24
330
R25
330
LED2
SLS0392FW2A1GD
DIG1
DIG2
R21
330
R20
330
R14
330
Q6
DMG3415U
DIG2_EN
1k
R27
U5
SN74HC164DR
CLK
CLR
QE
QF
QG
QH
VCC
QD
QC
QB
QA
SN_DATA
D4
LESD5D5
D5
LESD5D5
D6
LESD5D5
R9
5.1K -1%
R10
5.1K -1%
J2
USB_C_Receptacle
VBUS
CC1
CC2
D-
D+
RX1-
RX1+
TX1-
TX1+
RX2-
RX2+
TX2-
TX2+
SBU1
SBU2
SHIELD
A1
S1
R13
10k
SW1
J3
Considering GPS WORKS ON 3.7V
GPS_RX
GPS_TX
J5
GPS
R19
100
J4
BUZ
R18
1k
Q4
NPN
LED_R
LED_G
LED_B
R15
150
R16
100
R17
100
LED3
PCB SIZE: 54 X 35 mm
Sheet: /
File: Bike.kicad_sch
Title:
Size: A4
Date:
Rev:
KiCad E.D.A. 8.0.0
Id: 1/1