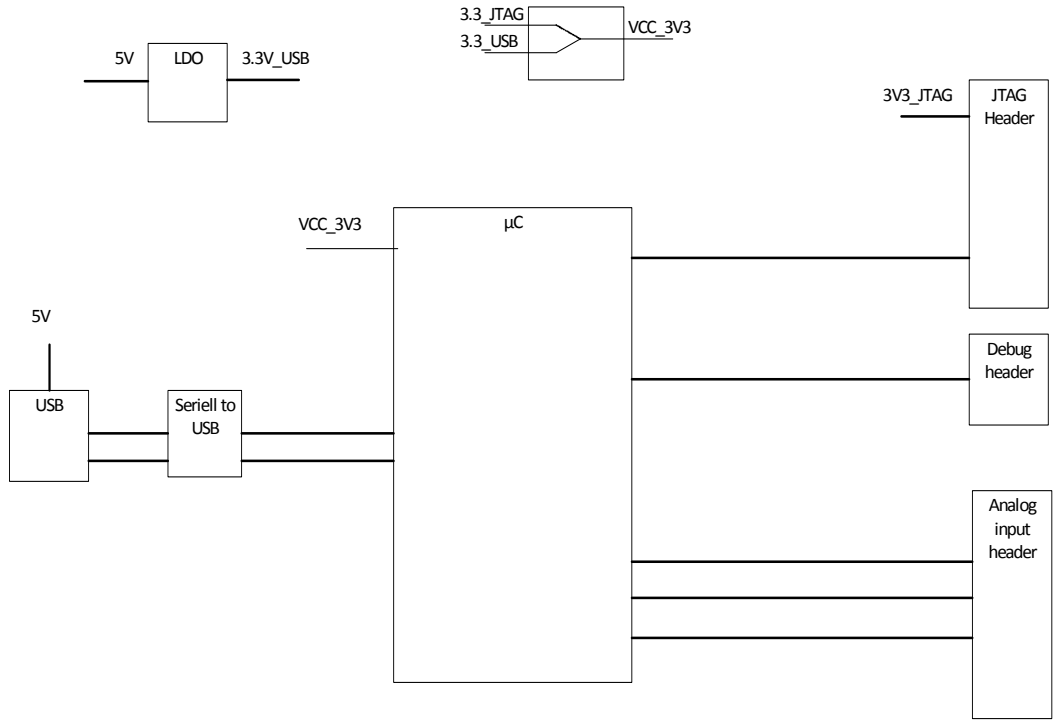

University of Bergen

TITLE: Frontpage	
Date: 06/03/2014:15:18	DWG: DWG
Sheet Size: B	REV: 0
Sheet 1 of 1	Drawn By Inge Nikolai Torsvik

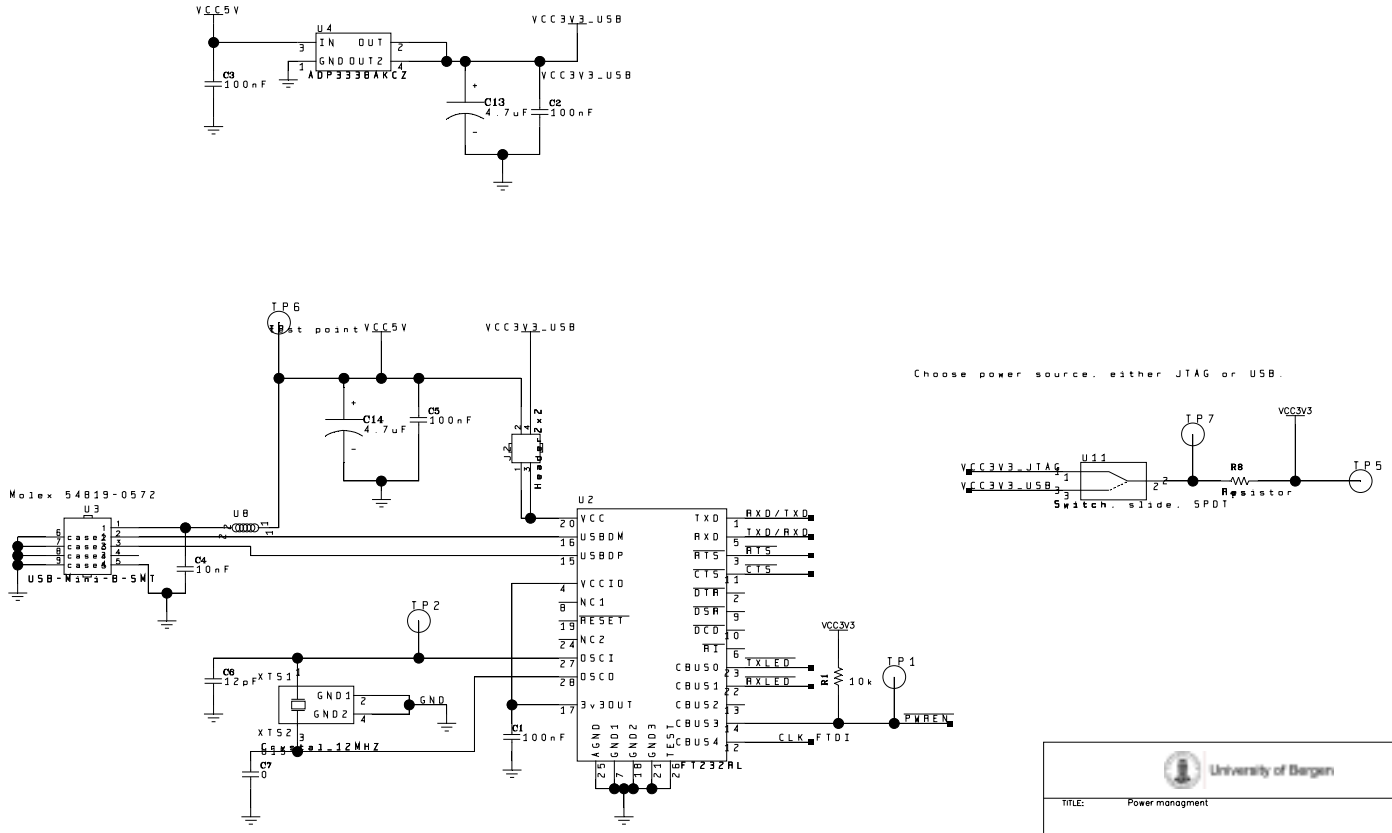

University of Bergen

TITLE:	Power managment
Date: 24/03/2014:12:43	DWG: DWG
Sheet Size: B	REV: 0
Sheet 2 of 2	Drawn By Inge Nikolai Torsvik

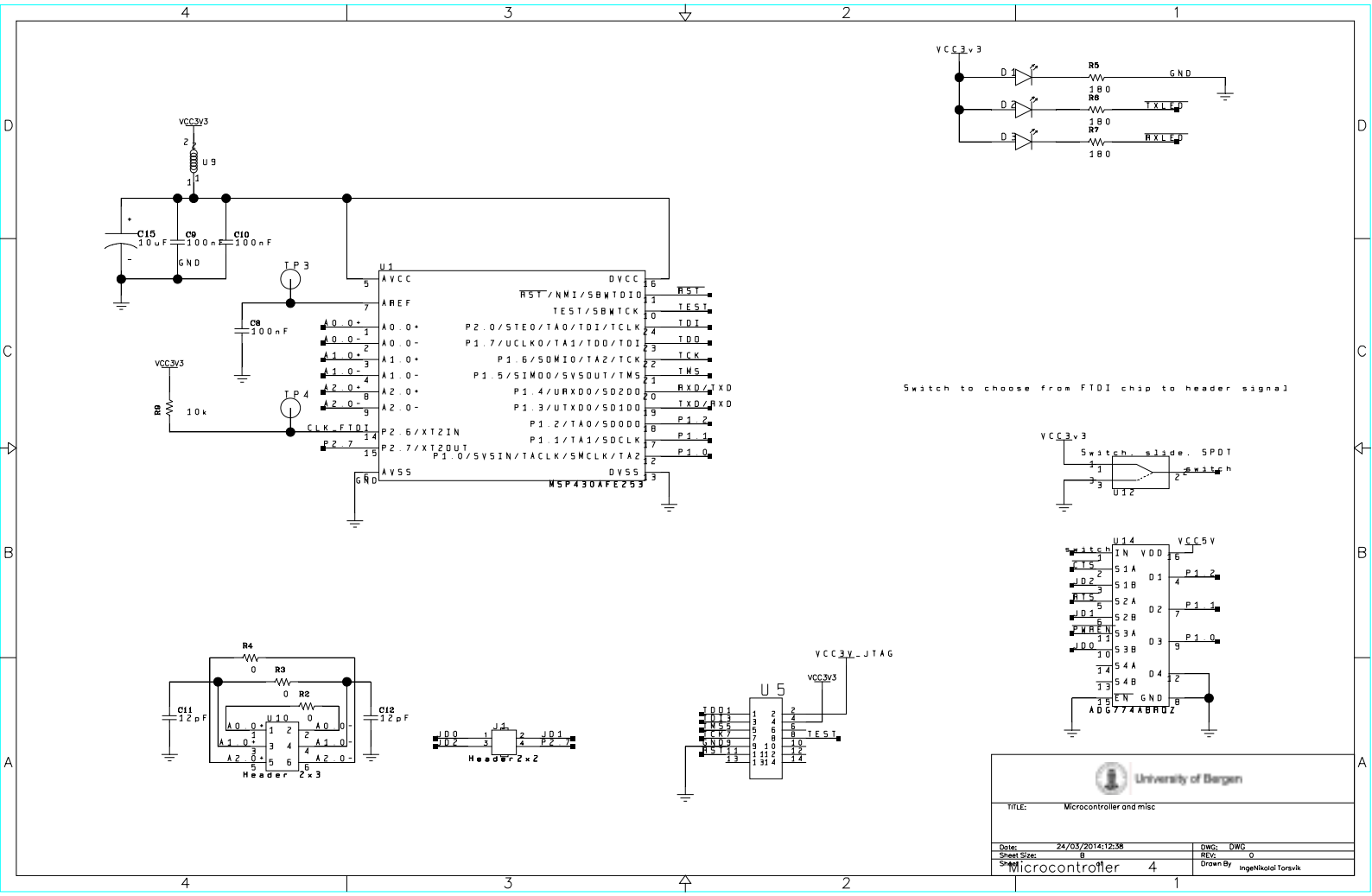
VCC3v3
D1
D2
D3
R5
R6
R7
180
GND
TXLED
RXLED
VCC3V3
U9
C15
10uF
C9
100nF
C10
100nF
GND
TP3
TP4
C8
100nF
R9
10k
U1
AVCC
AREF
A0.0+
A0.0-
A1.0+
A1.0-
A2.0+
A2.0-
P2.6/XT2IN
P2.7/XT2OUT
AVSS
GND
DVCC
RST/NMI/SBWTDIO
TEST/SBWTCK
P2.0/STE0/TA0/TDI/TCLK
P1.7/UCLK0/TA1/TDO/TDI
P1.6/SOMI0/TA2/TCK
P1.5/SIMO0/SVSOUT/TMS
P1.4/URXD0/SD2DO
P1.3/UTXD0/SD1DO
P1.2/TA0/SD0DO
P1.1/TA1/SDCLK
P1.0/SVSIN/TACLK/SMCLK/TA2
DVSS
MSP430AFE253
RST
TEST
TDI
TDO
TCK
TMS
RXD/TXD
TXD/RXD
P1.2
P1.1
P1.0
CLK_FTDI
P2.7
Switch to choose from FTDI chip to header signal
VCC3v3
Switch_slide_SPDT
switch
U12
U14
VCC5V
switch
IN
VDD
S1A
S1B
S2A
S2B
S3A
S3B
S4A
S4B
EN
GND
D1
D2
D3
D4
P1.2
P1.1
P1.0
ADG774ABRUZ
R4
R3
R2
C11
12pF
C12
12pF
U10
Header 2x3
J4
Header 2x2
VCC3V_JTAG
VCC3V3
U5
TEST
University of Bergen
TITLE:
Microcontroller and misc
Date:
24/03/2014:12:38
Sheet Size:
B
Sheet
Microcontroller
4
DWG:
DWG
REV:
0
Drawn By
IngeNikolai Torsvik