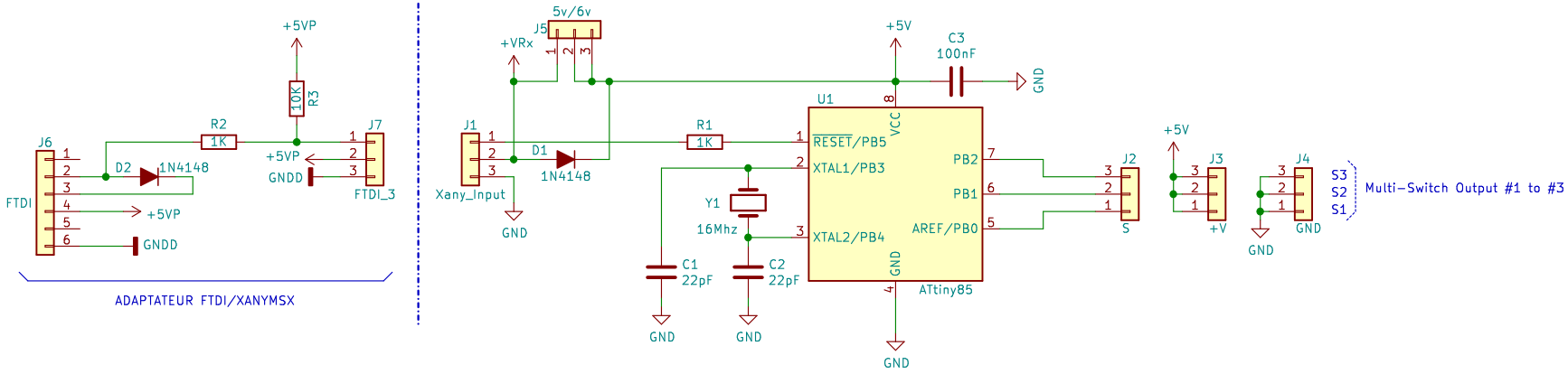


**OpenAVRc Team**

Sheet: /

File: Xany2Msx.sch

**Title: Carte Xany2Msx**

| | | |
|---|---|---|
| Size: A4 | Date: 2019-01-06 | **Rev: 0.1** |
| KiCad E.D.A. kicad (5.0.2)-1 | | Id: 1/1 |