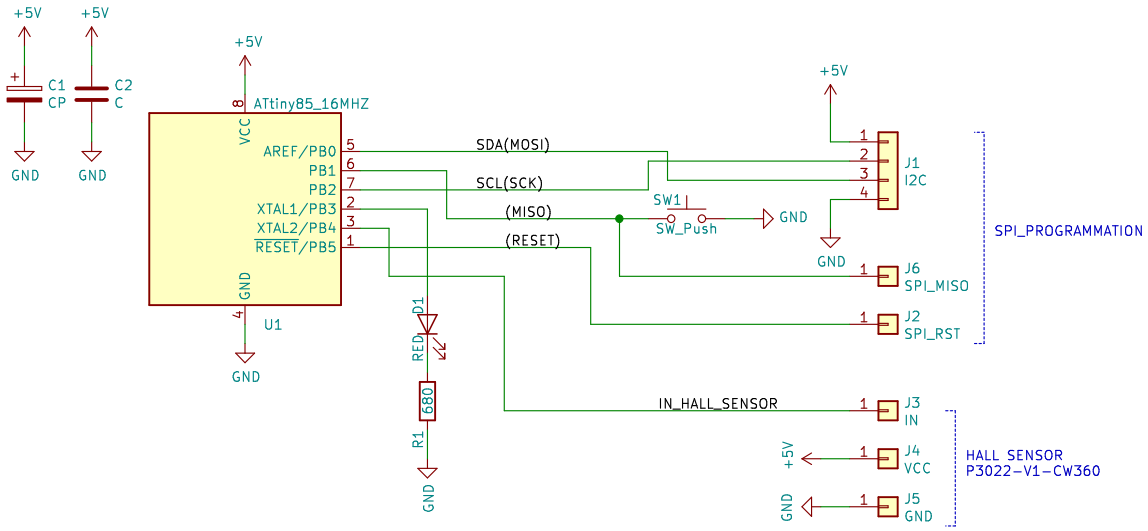

Dimension:

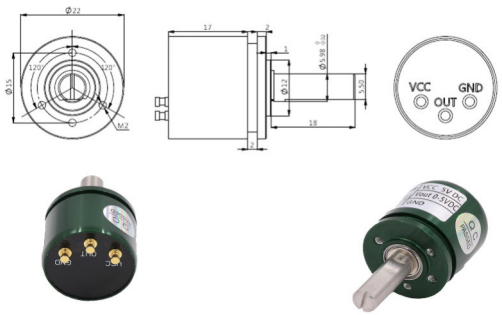

OpenAVRc

Sheet: /

File: Capteur_Hall_I2C.sch

Title: Board for Hall Sensor

Size: A4	Date: 2020-03-15	**Rev: 0.1**
KiCad E.D.A. kicad (5.1.5)-3		Id: 1/1