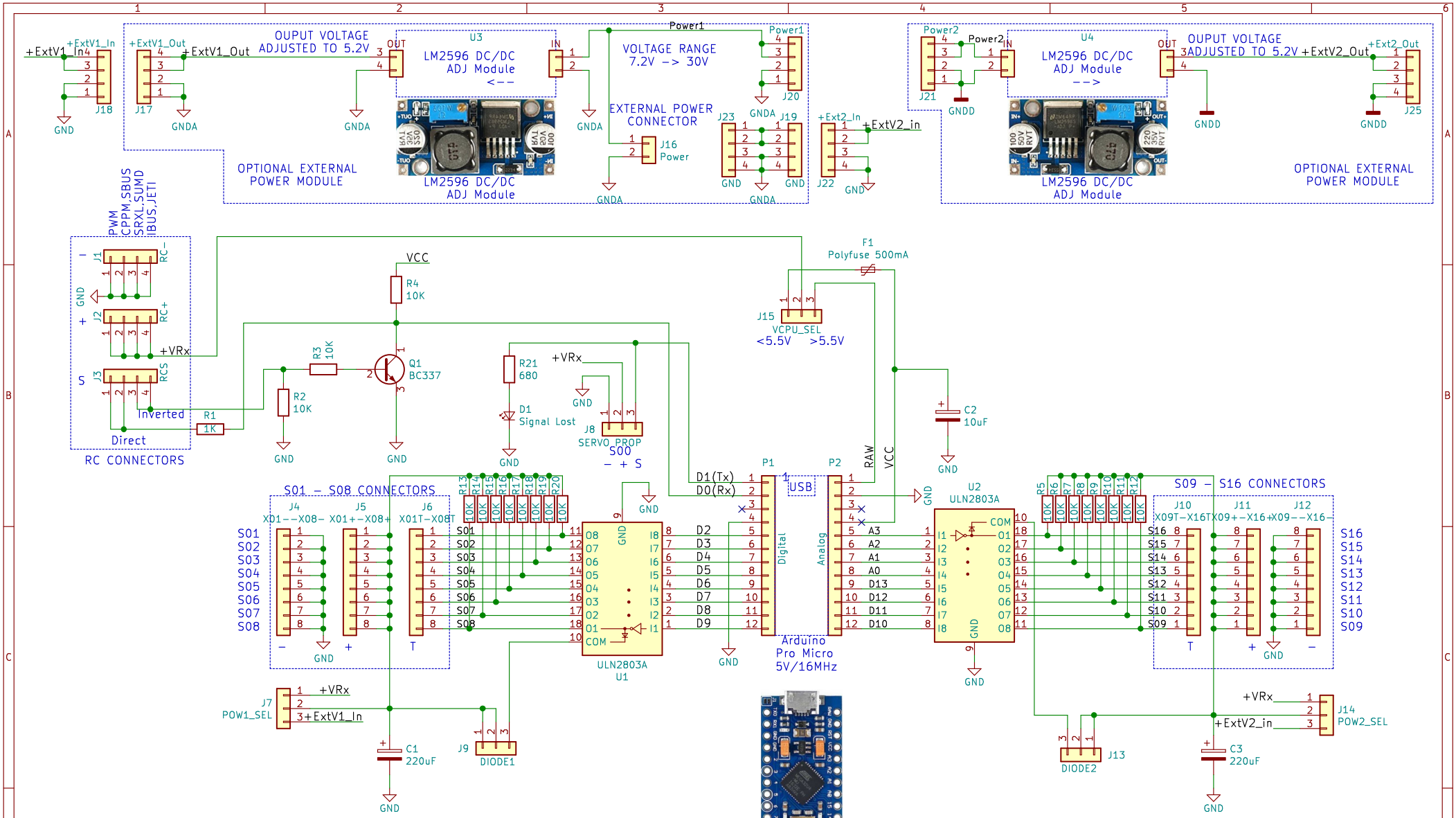
OUPUT VOLTAGE ADJUSTED TO 5.2V
U3
LM2596 DC/DC ADJ Module
<--
VOLTAGE RANGE 7.2V -> 30V
EXTERNAL POWER CONNECTOR
J16 Power
OPTIONAL EXTERNAL POWER MODULE
U4
LM2596 DC/DC ADJ Module
-->
OUPUT VOLTAGE ADJUSTED TO 5.2V
OPTIONAL EXTERNAL POWER MODULE
PWM CPPM,SBUS SRXL,SUMD IBUS,JETI
RC CONNECTORS
Inverted
Direct
VCC
R4 10K
R3 10K
R2 10K
R1 1K
Q1 BC337
R21 680
D1 Signal Lost
J8 SERVO_PROP S00
F1 Polyfuse 500mA
J15 VCPU_SEL
<5.5V >5.5V
C2 10uF
S01 – S08 CONNECTORS
S09 – S16 CONNECTORS
ULN2803A U1
U2 ULN2803A
Arduino Pro Micro 5V/16MHz
J7 POW1_SEL
J14 POW2_SEL
J9 DIODE1
J13 DIODE2
C1 220uF
C3 220uF
MS16: a Multi-Switch 16 (Directly compatible with OpenAVRc)
- Driven by PWM, CPPM, SBUS, SRXL (and more) RC commands (RCUL/X-Any protocol)
- Drive digital outputs (Leds, relays)
- Drive regular servos (up to 2 x built-in 5V/2A power supply)
By RC NAVY and Pierrotm777 © Team OpenAVRc
Sheet: /
File: MultiSwitch_Sw16_ProMicro.sch
Title: MultiSwitch_Sw16 ProMicro
Size: A4
Date: 2020-05-24
Rev: V1.0
KiCad E.D.A. kicad (5.1.5)-3
Id: 1/1