KC705 EVALUATION PLATFORM HW-K7-KC705 (XC7K325T -2 FFG900)

DISCLAIMER:

XILINX IS DISCLOSING THIS USER GUIDE, MANUAL, RELEASE NOTE, SCHEMATIC, AND/OR SPECIFICATION (THE “DOCUMENTATION”) TO YOU SOLELY FOR USE IN THE DEVELOPMENT OF DESIGNS TO OPERATE WITH XILINX HARDWARE DEVICES. YOU MAY NOT REPRODUCE, DISTRIBUTE, REPUBLISH, DOWNLOAD, DISPLAY, POST, OR TRANSMIT THE DOCUMENTATION IN ANY FORM OR BY ANY MEANS INCLUDING, BUT NOT LIMITED TO, ELECTRONIC, MECHANICAL, PHOTOCOPYING, RECORDING, OR OTHERWISE, WITHOUT THE PRIOR WRITTEN CONSENT OF XILINX. XILINX EXPRESSLY DISCLAIMS ANY LIABILITY ARISING OUT OF YOUR USE OF THE DOCUMENTATION. XILINX RESERVES THE RIGHT, AT ITS SOLE DISCRETION, TO CHANGE THE DOCUMENTATION WITHOUT NOTICE AT ANY TIME. XILINX ASSUMES NO OBLIGATION TO CORRECT ANY ERRORS CONTAINED IN THE DOCUMENTATION, OR TO ADVISE YOU OF ANY CORRECTIONS OR UPDATES. XILINX EXPRESSLY DISCLAIMS ANY LIABILITY IN CONNECTION WITH TECHNICAL SUPPORT OR ASSISTANCE THAT MAY BE PROVIDED TO YOU IN CONNECTION WITH THE DOCUMENTATION.
THE DOCUMENTATION IS DISCLOSED TO YOU “AS-IS” WITH NO WARRANTY OF ANY KIND. XILINX MAKES NO OTHER WARRANTIES, WHETHER EXPRESS, IMPLIED, OR STATUTORY, REGARDING THE DOCUMENTATION, INCLUDING ANY WARRANTIES OF MERCHANTABILITY, FITNESS FOR A PARTICULAR PURPOSE, OR NONINFRINGEMENT OF THIRD-PARTY RIGHTS. IN NO EVENT WILL XILINX BE LIABLE FOR ANY CONSEQUENTIAL, INDIRECT, EXEMPLARY, SPECIAL, OR INCIDENTAL DAMAGES, INCLUDING ANY LOSS OF DATA OR LOST PROFITS, ARISING FROM YOUR USE OF THE DOCUMENTATION.

THE XILINX HARDWARE, FPGA AND CPLD DEVICES REFERRED TO HEREIN ("PRODUCTS") ARE SUBJECT TO THE TERMS AND CONDITIONS OF THE XILINX LIMITED WARRANTY WHICH CAN BE VIEWED AT http://www.xilinx.com/warranty.htm. THIS LIMITED WARRANTY DOES NOT EXTEND TO ANY USE OF PRODUCTS IN AN APPLICATION OR ENVIRONMENT THAT IS NOT WITHIN THE SPECIFICATIONS STATED ON THE XILINX DATA SHEET.

ALL SPECIFICATIONS ARE SUBJECT TO CHANGE WITHOUT NOTICE.

PRODUCTS ARE NOT DESIGNED OR INTENDED TO BE FAIL-SAFE, OR FOR USE IN ANY APPLICATION REQUIRING FAIL-SAFE PERFORMANCE, SUCH AS LIFE-SUPPORT OR SAFETY DEVICES OR SYSTEMS, OR ANY OTHER APPLICATION THAT INVOKES THE POTENTIAL RISKS OF DEATH, PERSONAL INJURY OR PROPERTY OR ENVIRONMENTAL DAMAGE ("CRITICAL APPLICATIONS"). USE OF PRODUCTS IN CRITICAL APPLICATIONS IS AT THE SOLE RISK OF CUSTOMER, SUBJECT TO APPLICABLE LAWS AND REGULATIONS. ALL SPECIFICATIONS ARE SUBJECT TO CHANGE WITHOUT NOTICE.

Title:	DISCLAIMER SCHEM, ROHS COMPLIANT KC705 EVALUATION PLATFORM	ASSY P/N:	0431641
		PCB P/N:	1280565
		SCH P/N:	0381397
Date:	4-2-2012_15:15	Ver:	1.1
Sheet Size: B		Rev:	01
Sheet	1 of 47	Drawn By	BF

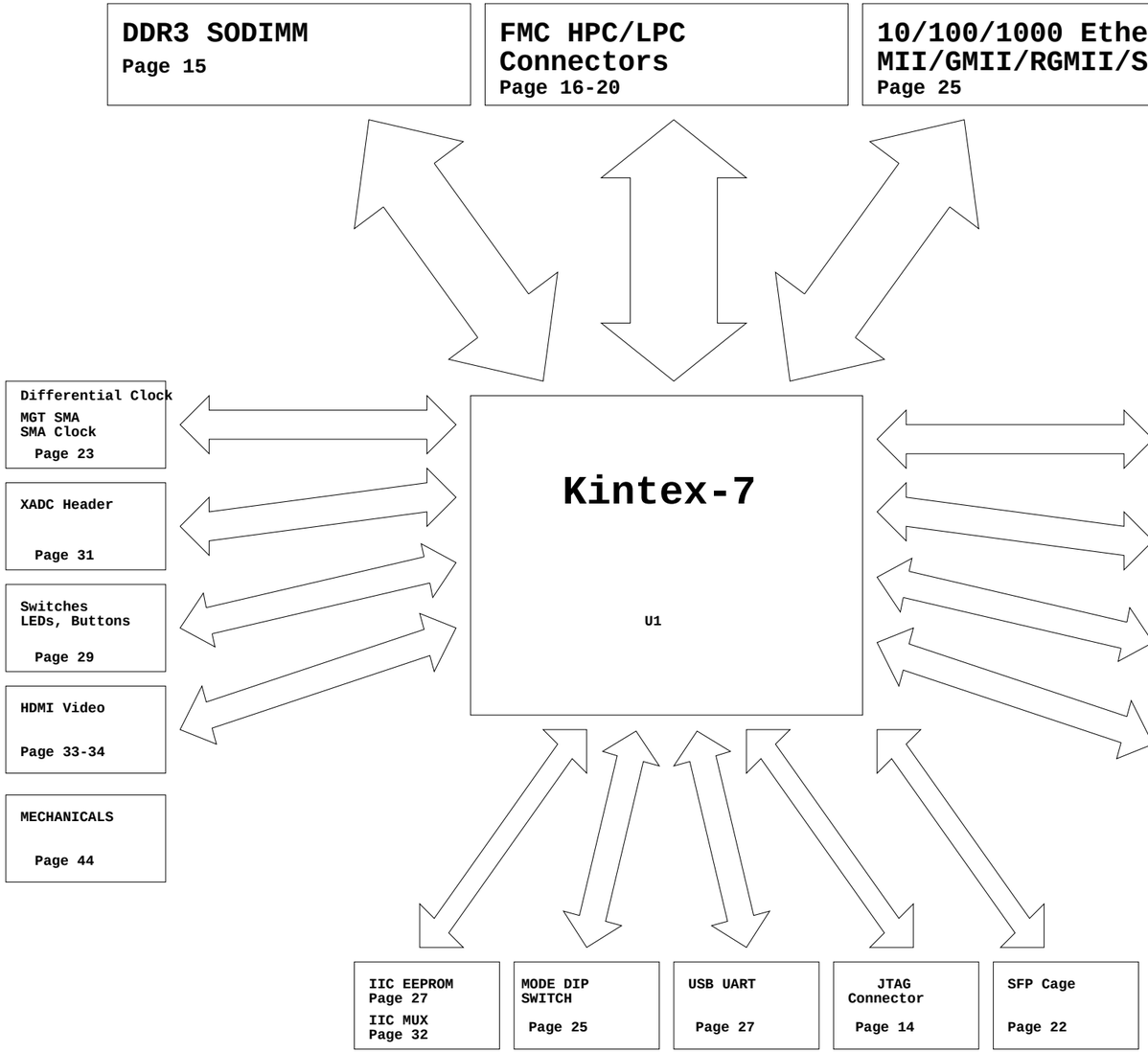

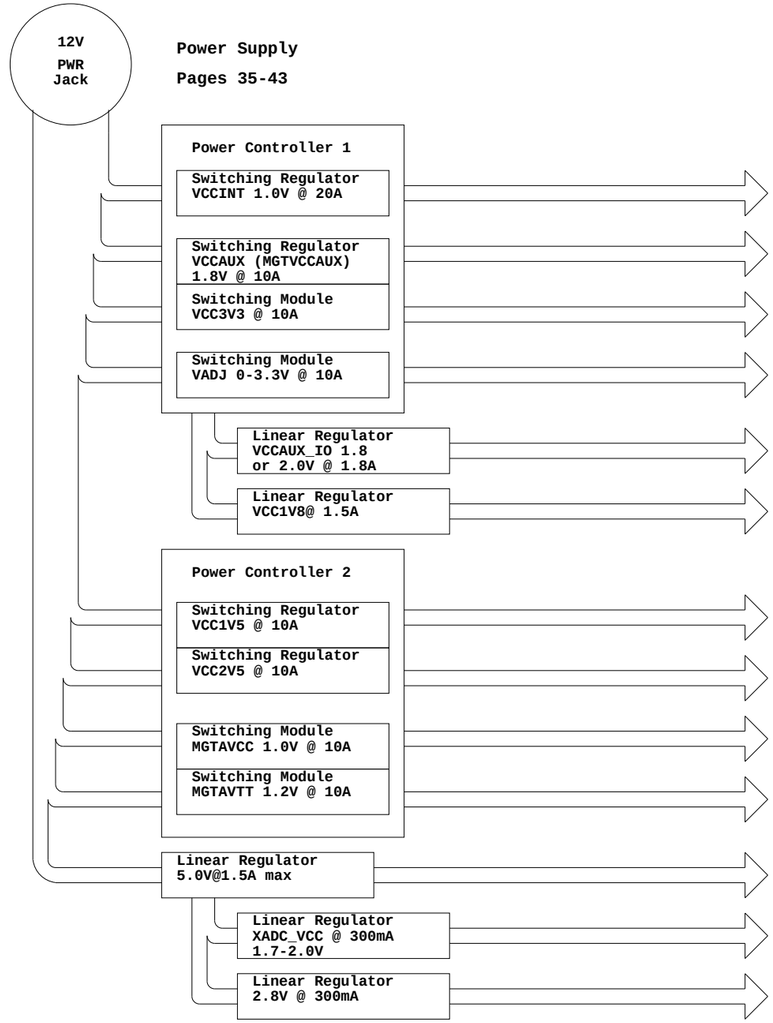

board please refer to the Bill of Materials delivered for that board. Further device and board information can be found on Xilinx.com

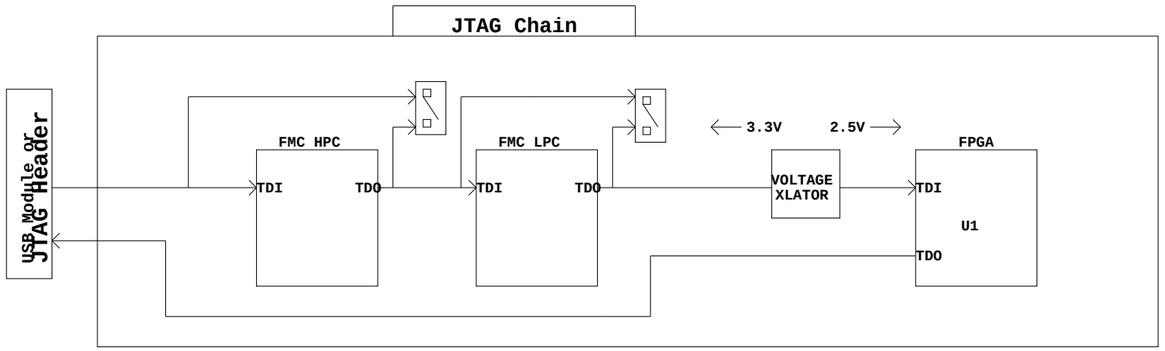

IIC Addressing	
0b1110100	PCA9548
0b1010000 0b0011000	DDR3 SODIMM
0bxxxxx00	FMC HPC
0bxxxxx00	FMC LPC
0b1010000	SFP+
0b1011101	SI570
0b1101000	SI5324
0b1010100	IIC EEPROM
0b0111001	ADV7512

IRONWOOD FFG900 SOCKET SUPPORTS MULTIPLE DEVICES REFER TO BOARD BILL OF MATERIALS TO CONFIRM FPGA PROVIDED

XILINX

Title:	KC705 Block Diagram SCHEM, ROHS COMPLIANT KC705 EVALUATION PLATFORM	ASSY P/N: 0431641 PCB P/N: 1280565 SCH P/N: 0381397
Date: 4-2-2012_15:15		Ver: 1.1
Sheet Size: B		Rev: 01
Sheet 2 of 47		Drawn By BF

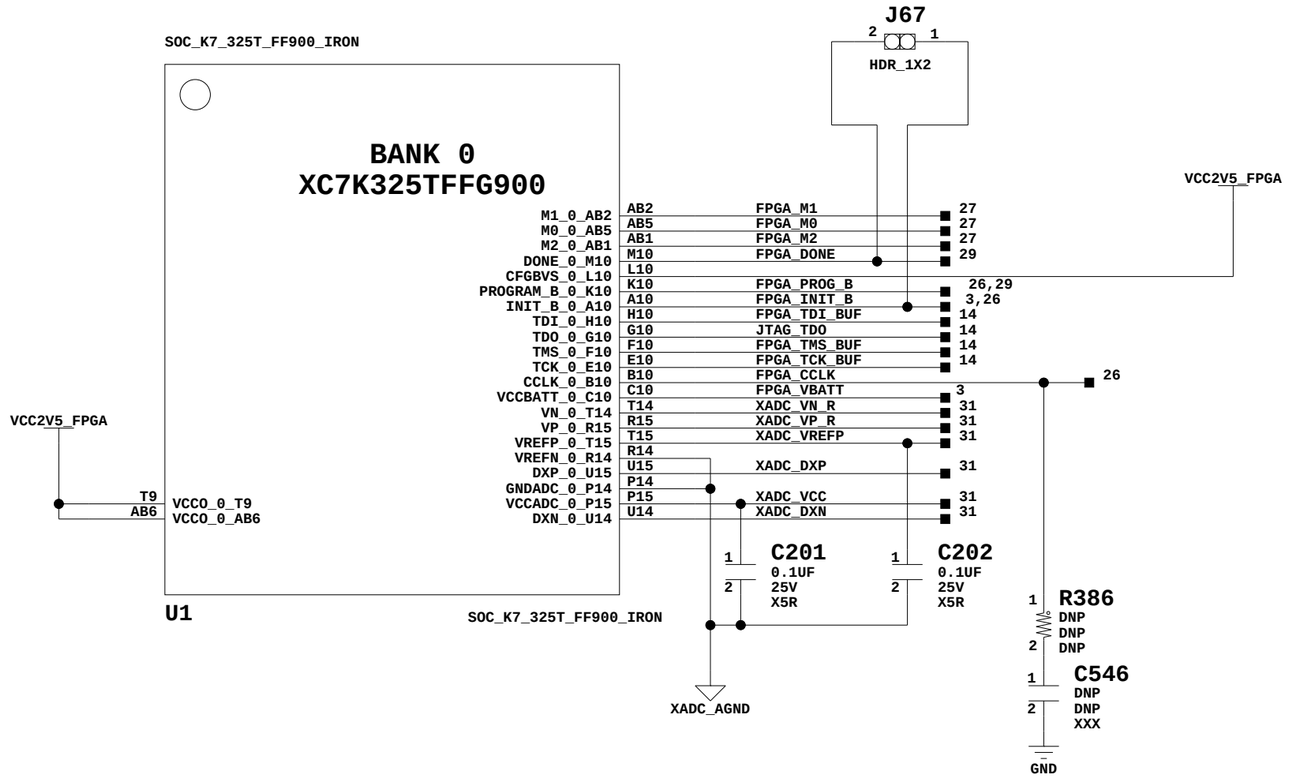

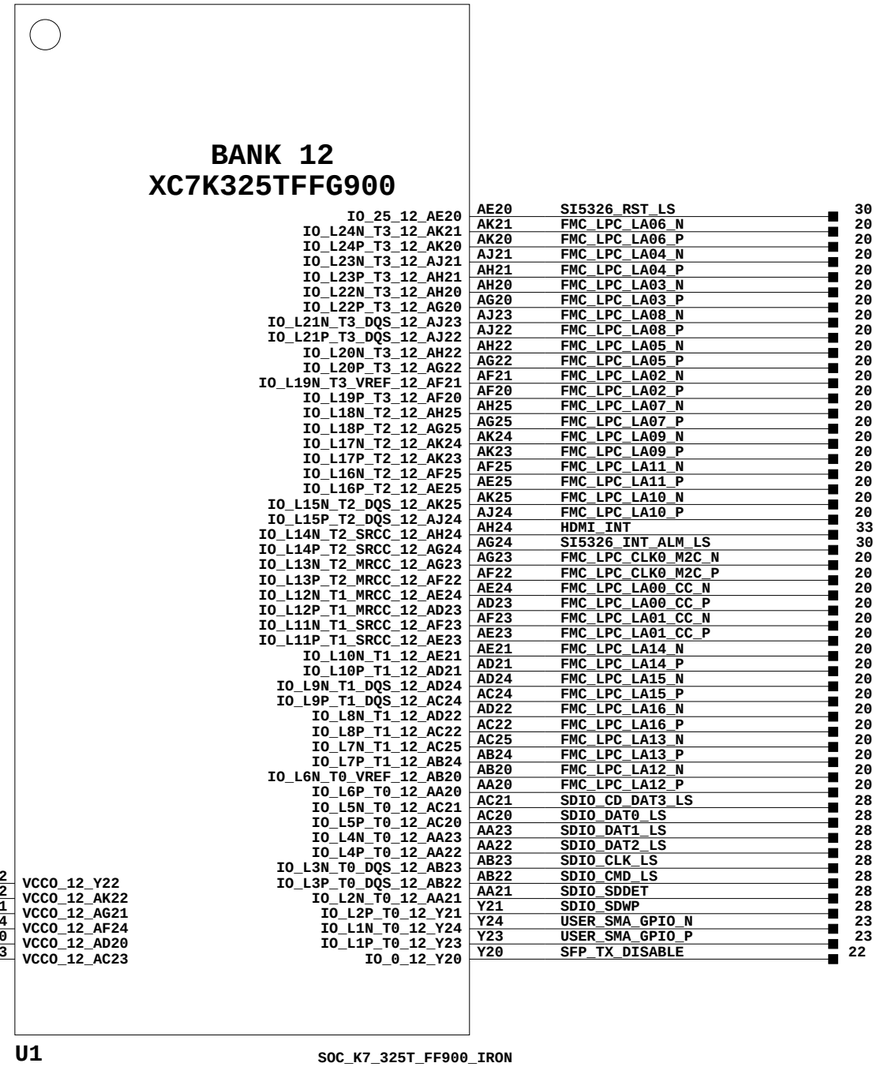

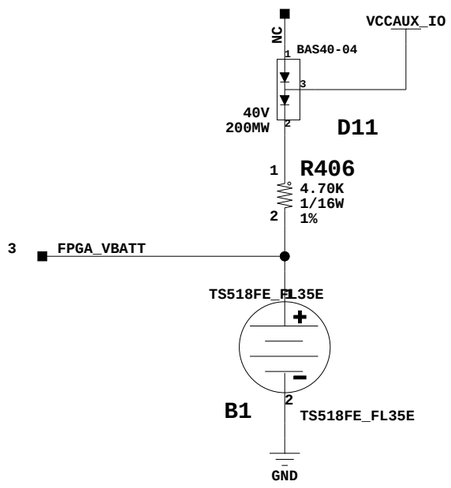

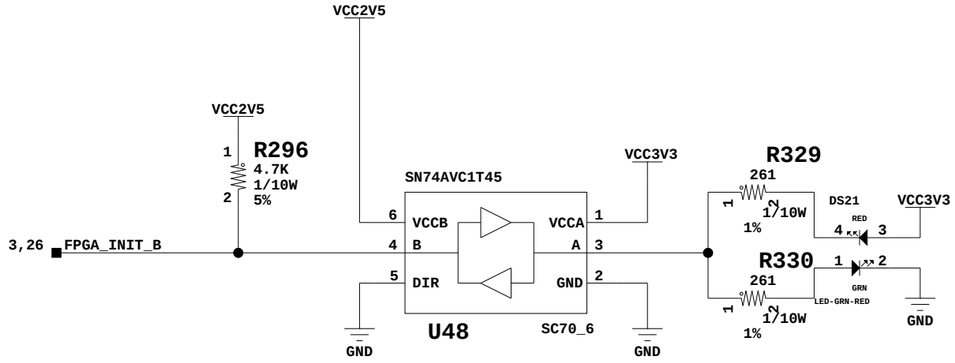

FPGA Banks 0,12

Title:	FPGA Banks 0,12 SCHEM, ROHS COMPLIANT KC705 EVALUATION PLATFORM	ASSY P/N: 0431641 PCB P/N: 1280565 SCH P/N: 0381397	
Date:	4-2-2012_15:15	Ver:	1.1
Sheet Size: B		Rev:	01
Sheet	3 of 47	Drawn By	BF

SOC_K7_325T_FF900_IRON

BANK 13
XC7K325TFFG900

IO_25_13_AE26	AE26	GPIO_LED_4_LS	30
IO_L24N_T3_13_AK26	AK26	FMC_LPC_LA19_N	20
IO_L24P_T3_13_AJ26	AJ26	FMC_LPC_LA19_P	20
IO_L23N_T3_13_AF27	AF27	FMC_LPC_LA20_N	20
IO_L23P_T3_13_AF26	AF26	FMC_LPC_LA20_P	20
IO_L22N_T3_13_AH27	AH27	FMC_LPC_LA23_N	20
IO_L22P_T3_13_AH26	AH26	FMC_LPC_LA23_P	20
IO_L21N_T3_DQS_13_AG28	AG28	FMC_LPC_LA21_N	20
IO_L21P_T3_DQS_13_AG27	AG27	FMC_LPC_LA21_P	20
IO_L20N_T3_13_AK28	AK28	FMC_LPC_LA22_N	20
IO_L20P_T3_13_AJ27	AJ27	FMC_LPC_LA22_P	20
IO_L19N_T3_VREF_13_AD26	AD26	FMC_LPC_LA25_N	20
IO_L19P_T3_13_AC26	AC26	FMC_LPC_LA25_P	20
IO_L18N_T2_13_AH30	AH30	FMC_LPC_LA24_N	20
IO_L18P_T2_13_AG30	AG30	FMC_LPC_LA24_P	20
IO_L17N_T2_13_AJ29	AJ29	FMC_LPC_LA27_N	20
IO_L17P_T2_13_AJ28	AJ28	FMC_LPC_LA27_P	20
IO_L16N_T2_13_AF30	AF30	FMC_LPC_LA28_N	20
IO_L16P_T2_13_AE30	AE30	FMC_LPC_LA28_P	20
IO_L15N_T2_DQS_13_AK30	AK30	FMC_LPC_LA26_N	20
IO_L15P_T2_DQS_13_AK29	AK29	FMC_LPC_LA26_P	20
IO_L14N_T2_SRCC_13_AF28	AF28	FMC_LPC_LA29_N	20
IO_L14P_T2_SRCC_13_AE28	AE28	FMC_LPC_LA29_P	20
IO_L13N_T2_MRCC_13_AH29	AH29	FMC_LPC_CLK1_M2C_N	20
IO_L13P_T2_MRCC_13_AG29	AG29	FMC_LPC_CLK1_M2C_P	20
IO_L12N_T1_MRCC_13_AC27	AC27	FMC_LPC_LA17_CC_N	20
IO_L12P_T1_MRCC_13_AB27	AB27	FMC_LPC_LA17_CC_P	20
IO_L11N_T1_SRCC_13_AD28	AD28	FMC_LPC_LA18_CC_N	20
IO_L11P_T1_SRCC_13_AD27	AD27	FMC_LPC_LA18_CC_P	20
IO_L10N_T1_13_AB30	AB30	FMC_LPC_LA30_N	20
IO_L10P_T1_13_AB29	AB29	FMC_LPC_LA30_P	20
IO_L9N_T1_DQS_13_AE29	AE29	FMC_LPC_LA31_N	20
IO_L9P_T1_DQS_13_AD29	AD29	FMC_LPC_LA31_P	20
IO_L8N_T1_13_AA30	AA30	FMC_LPC_LA32_N	20
IO_L8P_T1_13_Y30	Y30	FMC_LPC_LA32_P	20
IO_L7N_T1_13_AC30	AC30	FMC_LPC_LA33_N	20
IO_L7P_T1_13_AC29	AC29	FMC_LPC_LA33_P	20
IO_L6N_T0_VREF_13_AB25	AB25	XADC_GPIO_0	31
IO_L6P_T0_13_AA25	AA25	XADC_GPIO_1	31
IO_L5N_T0_13_AB28	AB28	XADC_GPIO_2	31
IO_L5P_T0_13_AA27	AA27	XADC_GPIO_3	31
IO_L4N_T0_13_Y29	Y29	GPIO_DIP_SW0	29
IO_L4P_T0_13_W29	W29	GPIO_DIP_SW1	29
IO_L3N_T0_DQS_13_AA28	AA28	GPIO_DIP_SW2	29
IO_L3P_T0_DQS_13_Y28	Y28	GPIO_DIP_SW3	29
IO_L2N_T0_13_W28	W28	REC_CLOCK_C_N	24
IO_L2P_T0_13_W27	W27	REC_CLOCK_C_P	24
IO_L1N_T0_13_AA26	AA26	ROTARY_PUSH	29
IO_L1P_T0_13_Y26	Y26	ROTARY_INCA	29
IO_0_13_Y25	Y25	ROTARY_INCB	29

VADJ_FPGA

AJ25	VCCO_13_AJ25
AH28	VCCO_13_AH28
AE27	VCCO_13_AE27
AD30	VCCO_13_AD30
AB26	VCCO_13_AB26
AA29	VCCO_13_AA29

U1

SOC_K7_325T_FF900_IRON

SOC_K7_325T_FF900_IRON

BANK 14
XC7K325TFFG900

IO_25_14_W19	W19	PHY_COL	25
IO_L24N_T3_A00_D16_14_W22	W22	FLASH_A0	26
IO_L24P_T3_A01_D17_14_W21	W21	FLASH_A1	26
IO_L23N_T3_A02_D18_14_V24	V24	FLASH_A2	26
IO_L23P_T3_A03_D19_14_U24	U24	FLASH_A3	26
IO_L22N_T3_A04_D20_14_V22	V22	FLASH_A4	26
IO_L22P_T3_A05_D21_14_V21	V21	FLASH_A5	26
IO_L21N_T3_DQS_A06_D22_14_U23	U23	FLASH_A6	26
IO_L21P_T3_DQS_14_U22	U22	SM_FAN_TACH	35
IO_L20N_T3_A07_D23_14_W24	W24	FLASH_A7	26
IO_L20P_T3_A08_D24_14_W23	W23	FLASH_A8	26
IO_L19N_T3_A09_D25_VREF_14_V20	V20	FLASH_A9	26
IO_L19P_T3_A10_D26_14_V19	V19	FLASH_A10	26
IO_L18N_T2_A11_D27_14_W26	W26	FLASH_A11	26
IO_L18P_T2_A12_D28_14_V25	V25	FLASH_A12	26
IO_L17N_T2_A13_D29_14_V30	V30	FLASH_A13	26
IO_L17P_T2_A14_D30_14_V29	V29	FLASH_A14	26
IO_L16N_T2_A15_D31_14_V27	V27	FLASH_A15	26
IO_L16P_T2_CSI_B_14_V26	V26	PHY_RXER	25
IO_L15N_T2_DQSDOUT_CSOB_14_U30	U30	PHY_RXD0	25
IO_L15P_T2_DQS_RDWR_B_14_U29	U29	FLASH_WAIT	26
IO_L14N_T2_SRCC_14_U25	U25	PHY_RXD1	25
IO_L14P_T2_SRCC_14_T25	T25	PHY_RXD2	25
IO_L13N_T2_MRCC_14_U28	U28	PHY_RXD3	25
IO_L13P_T2_MRCC_14_U27	U27	PHY_RXCLK	25
IO_L12N_T1_MRCC_14_T27	T27	PHY_RXD5	25
IO_L12P_T1_MRCC_14_T26	T26	PHY_RXD6	25
IO_L11N_T1_SRCC_14_T28	T28	PHY_RXD7	25
IO_L11P_T1_SRCC_14_R28	R28	PHY_RXCTL_RXDV	25
IO_L10N_T1_D15_14_R26	R26	FLASH_D15	26
IO_L10P_T1_D14_14_P26	P26	FLASH_D14	26
IO_L9N_T1_DQS_D13_14_T30	T30	FLASH_D13	26
IO_L9P_T1_DQS_14_R30	R30	PHY_CRS	25
IO_L8N_T1_D12_14_P28	P28	FLASH_D12	26
IO_L8P_T1_D11_14_P27	P27	FLASH_D11	26
IO_L7N_T1_D10_14_R29	R29	FLASH_D10	26
IO_L7P_T1_D09_14_P29	P29	FLASH_D9	26
IO_L6N_T0_D08_VREF_14_U20	U20	FLASH_D8	26
IO_L6P_T0_FCS_B_14_U19	U19	FPGA_FCS	27
IO_L5N_T0_D07_14_T23	T23	FLASH_D7	26
IO_L5P_T0_D06_14_T22	T22	FLASH_D6	26
IO_L4N_T0_D05_14_T21	T21	FLASH_D5	26
IO_L4P_T0_D04_14_T20	T20	FLASH_D4	26
IO_L3N_T0_DQS_EMCCLK_14_R24	R24	FPGA_EMCCLK	14
IO_L3P_T0_DQS_PUDC_B_14_R23	R23	PHY_MDC	25
IO_L2N_T0_D03_14_R21	R21	FLASH_D3	26
IO_L2P_T0_D02_14_R20	R20	FLASH_D2	26
IO_L1N_T0_D01_DIN_14_R25	R25	FLASH_D1	26
IO_L1P_T0_D00_MOSI_14_P24	P24	FLASH_D0	26
IO_0_14_R19	R19	PHY_RXD4	25

VCC2V5_FPGA

W25	VCCO_14_W25
V28	VCCO_14_V28
U21	VCCO_14_U21
T24	VCCO_14_T24
R27	VCCO_14_R27
P30	VCCO_14_P30

U1

SOC_K7_325T_FF900_IRON

R405
1.00K
1/16W
1%

GND

FPGA Banks 13, 14

XILINX

Title:	FPGA Banks 13, 14 SCHEM, ROHS COMPLIANT KC705 EVALUATION PLATFORM	ASSY P/N: 0431641 PCB P/N: 1280565 SCH P/N: 0381397	
Date:	4-2-2012_15:15	Ver:	1.1
Sheet Size: B		Rev:	01
Sheet	4 of 47	Drawn By	BF

SOC_K7_325T_FF900_IRON

BANK 15
XC7K325TFFG900

IO_25_15_P19	P19	SFP_LOS_LS	30
IO_L24N_T3_RS0_15_M23	M23	FLASH_A24	26,27
IO_L24P_T3_RS1_15_M22	M22	FLASH_A25	26,27
IO_L23N_T3_FWE_B_15_M25	M25	FLASH_FWE_B	26
IO_L23P_T3_FOE_B_15_M24	M24	FLASH_OE_B	26
IO_L22N_T3_A16_15_P22	P22	FLASH_A16	26
IO_L22P_T3_A17_15_P21	P21	FLASH_A17	26
IO_L21N_T3_DQS_A18_15_N24	N24	FLASH_A18	26
IO_L21P_T3_DQS_15_P23	P23	IIC_MUX_RESET_B	32
IO_L20N_T3_A19_15_N22	N22	FLASH_A19	26
IO_L20P_T3_A20_15_N21	N21	FLASH_A20	26
IO_L19N_T3_A21_VREF_15_N20	N20	FLASH_A21	26
IO_L19P_T3_A22_15_N19	N19	FLASH_A22	26
IO_L18N_T2_A23_15_N26	N26	FLASH_A23	26
IO_L18P_T2_A24_15_N25	N25	PHY_TXD1	25
IO_L17N_T2_A25_15_N30	N30	PHY_INT	25
IO_L17P_T2_A26_15_N29	N29	PHY_TXER	25
IO_L16N_T2_A27_15_M27	M27	PHY_TXCTL_TXEN	25
IO_L16P_T2_A28_15_N27	N27	PHY_TXD0	25
IO_L15N_T2_DQS_ADV_B_15_M30	M30	FLASH_ADV_B	26
IO_L15P_T2_DQS_15_M29	M29	PHY_TXD2	25
IO_L14N_T2_SRCC_15_L28	L28	PHY_TXD3	25
IO_L14P_T2_SRCC_15_M28	M28	PHY_TXCLK	25
IO_L13N_T2_MRCC_15_K29	K29	USER_CLOCK_N	23
IO_L13P_T2_MRCC_15_K28	K28	USER_CLOCK_P	23
IO_L12N_T1_MRCC_AD5N_15_K25	K25	USER_SMA_CLOCK_N	23
IO_L12P_T1_MRCC_AD5P_15_L25	L25	USER_SMA_CLOCK_P	23
IO_L11N_T1_SRCC_AD12N_15_L27	L27	USB_CTS	27
IO_L11P_T1_SRCC_AD12P_15_L26	L26	SM_FAN_PWM	35
IO_L10N_T1_AD4N_15_J26	J26	PHY_TXD4	25
IO_L10P_T1_AD4P_15_K26	K26	PHY_TXD5	25
IO_L9N_T1_DQS_AD11N_15_K30	K30	PHY_TXC_GTXCLK	25
IO_L9P_T1_DQS_AD11P_15_L30	L30	PHY_TXD6	25
IO_L8N_T1_AD3N_15_J28	J28	PHY_TXD7	25
IO_L8P_T1_AD3P_15_J27	J27	FMC_VADJ_ON_B_LS	30
IO_L7N_T1_AD10N_15_H29	H29	FMC_C2M_PG_LS	30
IO_L7P_T1_AD10P_15_J29	J29	FMC_HPC_PG_M2C_LS	30
IO_L6N_T0_VREF_15_L20	L20	PHY_RESET	25
IO_L6P_T0_15_M20	M20	FMC_HPC_PRSNT_M2C_B_LS	30
IO_L5N_T0_AD2N_15_J22	J22	FMC_LPC_PRSNT_M2C_B_LS	30
IO_L5P_T0_AD2P_15_J21	J21	PHY_MDIO	25
IO_L4N_T0_AD9N_15_K21	K21	IIC_SCL_MAIN	32
IO_L4P_T0_AD9P_15_L21	L21	IIC_SDA_MAIN	32
IO_L3N_T0_DQS_AD1N_15_K24	K24	USB_RX	27
IO_L3P_T0_DQS_AD1P_15_K23	K23	USB_RTS	27
IO_L2N_T0_AD8N_15_L23	L23	XADC_VAUX8N_R	31
IO_L2P_T0_AD8P_15_L22	L22	XADC_VAUX8P_R	31
IO_L1N_T0_AD0N_15_J24	J24	XADC_VAUX0N_R	31
IO_L1P_T0_AD0P_15_J23	J23	XADC_VAUX0P_R	31
IO_0_15_M19	M19	USB_TX	27

VCC2V5_FPGA

P20	VCCO_15_P20
N23	VCCO_15_N23
M26	VCCO_15_M26
L29	VCCO_15_L29
K22	VCCO_15_K22
J25	VCCO_15_J25

U1

SOC_K7_325T_FF900_IRON

SOC_K7_325T_FF900_IRON

BANK 16
XC7K325TFFG900

IO_25_16_G25	G25	PCIE_PERST_LS	30
IO_L24N_T3_16_G30	G30	FMC_HPC_LA06_N	16
IO_L24P_T3_16_H30	H30	FMC_HPC_LA06_P	16
IO_L23N_T3_16_H27	H27	FMC_HPC_LA03_N	17
IO_L23P_T3_16_H26	H26	FMC_HPC_LA03_P	17
IO_L22N_T3_16_F30	F30	FMC_HPC_LA05_N	16
IO_L22P_T3_16_G29	G29	FMC_HPC_LA05_P	16
IO_L21N_T3_DQS_16_F27	F27	FMC_HPC_LA11_N	18
IO_L21P_T3_DQS_16_G27	G27	FMC_HPC_LA11_P	18
IO_L20N_T3_16_F28	F28	FMC_HPC_LA04_N	18
IO_L20P_T3_16_G28	G28	FMC_HPC_LA04_P	18
IO_L19N_T3_VREF_16_H25	H25	FMC_HPC_LA02_N	18
IO_L19P_T3_16_H24	H24	FMC_HPC_LA02_P	18
IO_L18N_T2_16_E30	E30	FMC_HPC_LA08_N	17
IO_L18P_T2_16_E29	E29	FMC_HPC_LA08_P	17
IO_L17N_T2_16_A30	A30	FMC_HPC_LA09_N	16
IO_L17P_T2_16_B30	B30	FMC_HPC_LA09_P	16
IO_L16N_T2_16_C30	C30	FMC_HPC_LA10_N	16
IO_L16P_T2_16_D29	D29	FMC_HPC_LA10_P	16
IO_L15N_T2_DQS_16_B29	B29	FMC_HPC_LA12_N	17
IO_L15P_T2_DQS_16_C29	C29	FMC_HPC_LA12_P	17
IO_L14N_T2_SRCC_16_D28	D28	FMC_HPC_LA07_N	18
IO_L14P_T2_SRCC_16_E28	E28	FMC_HPC_LA07_P	18
IO_L13N_T2_MRCC_16_C27	C27	FMC_HPC_CLK0_M2C_N	18
IO_L13P_T2_MRCC_16_D27	D27	FMC_HPC_CLK0_M2C_P	18
IO_L12N_T1_MRCC_16_B25	B25	FMC_HPC_LA00_CC_N	17
IO_L12P_T1_MRCC_16_C25	C25	FMC_HPC_LA00_CC_P	17
IO_L11N_T1_SRCC_16_C26	C26	FMC_HPC_LA01_CC_N	16
IO_L11P_T1_SRCC_16_D26	D26	FMC_HPC_LA01_CC_P	16
IO_L10N_T1_16_A26	A26	FMC_HPC_LA13_N	16
IO_L10P_T1_16_A25	A25	FMC_HPC_LA13_P	16
IO_L9N_T1_DQS_16_A28	A28	FMC_HPC_LA14_N	16
IO_L9P_T1_DQS_16_B28	B28	FMC_HPC_LA14_P	16
IO_L8N_T1_16_B24	B24	FMC_HPC_LA15_N	18
IO_L8P_T1_16_C24	C24	FMC_HPC_LA15_P	18
IO_L7N_T1_16_A27	A27	FMC_HPC_LA16_N	17
IO_L7P_T1_16_B27	B27	FMC_HPC_LA16_P	17
IO_L6N_T0_VREF_16_G24	G24	HDMI_R_D11	34
IO_L6P_T0_16_G23	G23	HDMI_R_D10	34
IO_L5N_T0_16_E26	E26	HDMI_R_D9	34
IO_L5P_T0_16_F26	F26	HDMI_R_D8	34
IO_L4N_T0_16_D24	D24	HDMI_R_D7	34
IO_L4P_T0_16_E24	E24	HDMI_R_D6	34
IO_L3N_T0_DQS_16_E25	E25	HDMI_R_D5	34
IO_L3P_T0_DQS_16_F25	F25	HDMI_R_D4	34
IO_L2N_T0_16_D23	D23	HDMI_R_D3	34
IO_L2P_T0_16_E23	E23	HDMI_R_D2	34
IO_L1N_T0_16_A23	A23	HDMI_R_D1	34
IO_L1P_T0_16_B23	B23	HDMI_R_D0	34
IO_0_16_F23	F23	PCIE_WAKE_B_LS	30

VADJ_FPGA

H28	VCCO_16_H28
F24	VCCO_16_F24
E27	VCCO_16_E27
D30	VCCO_16_D30
C23	VCCO_16_C23
B26	VCCO_16_B26
A29	VCCO_16_A29

U1

SOC_K7_325T_FF900_IRON

FPGA Banks 15, 16

XILINX

Title:	FPGA Banks 15, 16 SCHEM, ROHS COMPLIANT KC705 EVALUATION PLATFORM	ASSY P/N: PCB P/N: SCH P/N:	0431641 1280565 0381397
Date:	4-2-2012_15:15	Ver:	1.1
Sheet Size: B		Rev:	01
Sheet	5 of 47	Drawn By	BF

SOC_K7_325T_FF900_IRON

BANK 17
XC7K325TFFG900

IO_25_17_E18	E18	GPIO_LED_6_LS	30
IO_L24N_T3_17_B19	B19	FMC_HPC_LA27_N	16
IO_L24P_T3_17_C19	C19	FMC_HPC_LA27_P	16
IO_L23N_T3_17_A22	A22	FMC_HPC_LA23_N	16
IO_L23P_T3_17_B22	B22	FMC_HPC_LA23_P	16
IO_L22N_T3_17_A18	A18	FMC_HPC_LA26_N	16
IO_L22P_T3_17_B18	B18	FMC_HPC_LA26_P	16
IO_L21N_T3_DQS_17_A21	A21	FMC_HPC_LA21_N	18
IO_L21P_T3_DQS_17_A20	A20	FMC_HPC_LA21_P	18
IO_L20N_T3_17_A17	A17	FMC_HPC_LA24_N	18
IO_L20P_T3_17_A16	A16	FMC_HPC_LA24_P	18
IO_L19N_T3_VREF_17_B20	B20	FMC_HPC_LA22_N	17
IO_L19P_T3_17_C20	C20	FMC_HPC_LA22_P	17
IO_L18N_T2_17_F17	F17	FMC_HPC_LA25_N	17
IO_L18P_T2_17_G17	G17	FMC_HPC_LA25_P	17
IO_L17N_T2_17_B17	B17	FMC_HPC_LA29_N	17
IO_L17P_T2_17_C17	C17	FMC_HPC_LA29_P	17
IO_L16N_T2_17_F18	F18	FMC_HPC_LA19_N	18
IO_L16P_T2_17_G18	G18	FMC_HPC_LA19_P	18
IO_L15N_T2_DQS_17_C16	C16	FMC_HPC_LA28_N	18
IO_L15P_T2_DQS_17_D16	D16	FMC_HPC_LA28_P	18
IO_L14N_T2_SRCC_17_D19	D19	FMC_HPC_LA20_N	17
IO_L14P_T2_SRCC_17_E19	E19	FMC_HPC_LA20_P	17
IO_L13N_T2_MRCC_17_D18	D18	FMC_HPC_CLK1_M2C_N	17
IO_L13P_T2_MRCC_17_D17	D17	FMC_HPC_CLK1_M2C_P	17
IO_L12N_T1_MRCC_17_E20	E20	FMC_HPC_LA17_CC_N	16
IO_L12P_T1_MRCC_17_F20	F20	FMC_HPC_LA17_CC_P	16
IO_L11N_T1_SRCC_17_E21	E21	FMC_HPC_LA18_CC_N	16
IO_L11P_T1_SRCC_17_F21	F21	FMC_HPC_LA18_CC_P	16
IO_L10N_T1_17_C22	C22	FMC_HPC_LA30_N	18
IO_L10P_T1_17_D22	D22	FMC_HPC_LA30_P	18
IO_L9N_T1_DQS_17_F22	F22	FMC_HPC_LA31_N	17
IO_L9P_T1_DQS_17_G22	G22	FMC_HPC_LA31_P	17
IO_L8N_T1_17_C21	C21	FMC_HPC_LA32_N	18
IO_L8P_T1_17_D21	D21	FMC_HPC_LA32_P	18
IO_L7N_T1_17_H22	H22	FMC_HPC_LA33_N	17
IO_L7P_T1_17_H21	H21	FMC_HPC_LA33_P	17
IO_L6N_T0_VREF_17_K20	K20	HDMI_R_D17	34
IO_L6P_T0_17_K19	K19	HDMI_R_D16	34
IO_L5N_T0_17_L18	L18	HDMI_R_D15	34
IO_L5P_T0_17_L17	L17	HDMI_R_D14	34
IO_L4N_T0_17_H19	H19	HDMI_R_D13	34
IO_L4P_T0_17_J19	J19	HDMI_R_D12	34
IO_L3N_T0_DQS_17_H17	H17	HDMI_R_DE	34
IO_L3P_T0_DQS_17_J17	J17	HDMI_R_SPDIF	34
IO_L2N_T0_17_G20	G20	HDMI_SPDIF_OUT_LS	30
IO_L2P_T0_17_H20	H20	HDMI_R_VSYNC	34
IO_L1N_T0_17_J18	J18	HDMI_R_HSYNC	34
IO_L1P_T0_17_K18	K18	HDMI_R_CLK	34
IO_0_17_G19	G19	GPIO_LED_5_LS	30

VADJ_FPGA

L19	VCCO_17_L19
H18	VCCO_17_H18
G21	VCCO_17_G21
E17	VCCO_17_E17
D20	VCCO_17_D20
B16	VCCO_17_B16
A19	VCCO_17_A19

U1

SOC_K7_325T_FF900_IRON

SOC_K7_325T_FF900_IRON

BANK 18
XC7K325TFFG900

IO_25_18_F16	F16	GPIO_LED_7_LS	30
IO_L24N_T3_18_A15	A15	FMC_HPC_HA07_N	18
IO_L24P_T3_18_B14	B14	FMC_HPC_HA07_P	18
IO_L23N_T3_18_B15	B15	FMC_HPC_HA12_N	17
IO_L23P_T3_18_C15	C15	FMC_HPC_HA12_P	17
IO_L22N_T3_18_A13	A13	FMC_HPC_HA11_N	18
IO_L22P_T3_18_B13	B13	FMC_HPC_HA11_P	18
IO_L21N_T3_DQS_18_C14	C14	FMC_HPC_HA06_N	18
IO_L21P_T3_DQS_18_D14	D14	FMC_HPC_HA06_P	18
IO_L20N_T3_18_E15	E15	FMC_HPC_HA08_N	17
IO_L20P_T3_18_E14	E14	FMC_HPC_HA08_P	17
IO_L19N_T3_VREF_18_E16	E16	FMC_HPC_HA05_N	17
IO_L19P_T3_18_F15	F15	FMC_HPC_HA05_P	17
IO_L18N_T2_18_C11	C11	FMC_HPC_HA02_N	18
IO_L18P_T2_18_D11	D11	FMC_HPC_HA02_P	18
IO_L17N_T2_18_A12	A12	FMC_HPC_HA10_N	18
IO_L17P_T2_18_A11	A11	FMC_HPC_HA10_P	18
IO_L16N_T2_18_E11	E11	FMC_HPC_HA04_N	17
IO_L16P_T2_18_F11	F11	FMC_HPC_HA04_P	17
IO_L15N_T2_DQS_18_B12	B12	FMC_HPC_HA03_N	18
IO_L15P_T2_DQS_18_C12	C12	FMC_HPC_HA03_P	18
IO_L14N_T2_SRCC_18_E13	E13	FMC_HPC_HA09_N	17
IO_L14P_T2_SRCC_18_F12	F12	FMC_HPC_HA09_P	17
IO_L13N_T2_MRCC_18_D13	D13	FMC_HPC_HA00_CC_N	17
IO_L13P_T2_MRCC_18_D12	D12	FMC_HPC_HA00_CC_P	17
IO_L12N_T1_MRCC_18_F13	F13	FMC_HPC_HA17_CC_N	18
IO_L12P_T1_MRCC_18_G13	G13	FMC_HPC_HA17_CC_P	18
IO_L11N_T1_SRCC_18_G14	G14	FMC_HPC_HA01_CC_N	17
IO_L11P_T1_SRCC_18_H14	H14	FMC_HPC_HA01_CC_P	17
IO_L10N_T1_18_H12	H12	FMC_HPC_HA19_N	17
IO_L10P_T1_18_H11	H11	FMC_HPC_HA19_P	17
IO_L9N_T1_DQS_18_H16	H16	FMC_HPC_HA14_N	18
IO_L9P_T1_DQS_18_J16	J16	FMC_HPC_HA14_P	18
IO_L8N_T1_18_J12	J12	FMC_HPC_HA21_N	18
IO_L8P_T1_18_J11	J11	FMC_HPC_HA21_P	18
IO_L7N_T1_18_G15	G15	FMC_HPC_HA15_N	17
IO_L7P_T1_18_H15	H15	FMC_HPC_HA15_P	17
IO_L6N_T0_VREF_18_K11	K11	FMC_HPC_HA22_N	18
IO_L6P_T0_18_L11	L11	FMC_HPC_HA22_P	18
IO_L5N_T0_18_J14	J14	FMC_HPC_HA18_N	18
IO_L5P_T0_18_K14	K14	FMC_HPC_HA18_P	18
IO_L4N_T0_18_J13	J13	FMC_HPC_HA20_N	17
IO_L4P_T0_18_K13	K13	FMC_HPC_HA20_P	17
IO_L3N_T0_DQS_18_L13	L13	FMC_HPC_HA23_N	18
IO_L3P_T0_DQS_18_L12	L12	FMC_HPC_HA23_P	18
IO_L2N_T0_18_K15	K15	FMC_HPC_HA16_N	17
IO_L2P_T0_18_L15	L15	FMC_HPC_HA16_P	17
IO_L1N_T0_18_K16	K16	FMC_HPC_HA13_N	17
IO_L1P_T0_18_L16	L16	FMC_HPC_HA13_P	17
IO_0_18_G12	G12	GPIO_SW_C	29

VADJ_FPGA

K12	VCCO_18_K12
J15	VCCO_18_J15
G11	VCCO_18_G11
F14	VCCO_18_F14
D10	VCCO_18_D10
C13	VCCO_18_C13

U1

SOC_K7_325T_FF900_IRON

FPGA Banks 17, 18

XILINX

Title:	FPGA Banks 17, 18 SCHEM, ROHS COMPLIANT KC705 EVALUATION PLATFORM	ASSY P/N: 0431641 PCB P/N: 1280565 SCH P/N: 0381397	
Date:	4-2-2012_15:15	Ver:	1.1
Sheet Size: B		Rev:	01
Sheet	6 of 47	Drawn By	BF

SOC_K7_325T_FF900_IRON

VTTVREF

C729
0.01UF
25V
X7R

GND

BANK 32
XC7K325TFFG900

IO_25_VRP_32_AB14	AB14	PMBUS_ALERT_LS	35
IO_L24N_T3_32_Y15	Y15	DDR3_D7	15
IO_L24P_T3_32_Y16	Y16	DDR3_DM0	15
IO_L23N_T3_32_AA16	AA16	DDR3_D1	15
IO_L23P_T3_32_AA17	AA17	DDR3_D4	15
IO_L22N_T3_32_AD14	AD14	DDR3_D3	15
IO_L22P_T3_32_AC14	AC14	DDR3_D2	15
IO_L21N_T3_DQS_32_AC15	AC15	DDR3_DQS0_N	15
IO_L21P_T3_DQS_32_AC16	AC16	DDR3_DQS0_P	15
IO_L20N_T3_32_AB15	AB15	DDR3_D5	15
IO_L20P_T3_32_AA15	AA15	DDR3_D0	15
IO_L19N_T3_VREF_32_AE14	AE14		
IO_L19P_T3_32_AE15	AE15	DDR3_D6	15
IO_L18N_T2_32_AC17	AC17	NC	
IO_L18P_T2_32_AB17	AB17	DDR3_DM1	15
IO_L17N_T2_32_AC19	AC19	DDR3_D10	15
IO_L17P_T2_32_AB19	AB19	DDR3_D8	15
IO_L16N_T2_32_AB18	AB18	DDR3_D13	15
IO_L16P_T2_32_AA18	AA18	DDR3_D12	15
IO_L15N_T2_DQS_32_Y18	Y18	DDR3_DQS1_N	15
IO_L15P_T2_DQS_32_Y19	Y19	DDR3_DQS1_P	15
IO_L14N_T2_SRCC_32_AD16	AD16	DDR3_D9	15
IO_L14P_T2_SRCC_32_AD17	AD17	DDR3_D11	15
IO_L13N_T2_MRCC_32_AE18	AE18	DDR3_D14	15
IO_L13P_T2_MRCC_32_AD18	AD18	DDR3_D15	15
IO_L12N_T1_MRCC_32_AG17	AG17	PMBUS_CLK_LS	35
IO_L12P_T1_MRCC_32_AF17	AF17	DDR3_DM2	15
IO_L11N_T1_SRCC_32_AG18	AG18	DDR3_D18	15
IO_L11P_T1_SRCC_32_AF18	AF18	DDR3_D19	15
IO_L10N_T1_32_AE19	AE19	DDR3_D22	15
IO_L10P_T1_32_AD19	AD19	DDR3_D23	15
IO_L9N_T1_DQS_32_AK18	AK18	DDR3_DQS2_N	15
IO_L9P_T1_DQS_32_AJ18	AJ18	DDR3_DQS2_P	15
IO_L8N_T1_32_AH19	AH19	DDR3_D20	15
IO_L8P_T1_32_AG19	AG19	DDR3_D16	15
IO_L7N_T1_32_AK19	AK19	DDR3_D17	15
IO_L7P_T1_32_AJ19	AJ19	DDR3_D21	15
IO_L6N_T0_VREF_32_AF16	AF16		
IO_L6P_T0_32_AE16	AE16	DDR3_DM3	15
IO_L5N_T0_32_AJ17	AJ17	DDR3_D25	15
IO_L5P_T0_32_AH17	AH17	DDR3_D28	15
IO_L4N_T0_32_AG14	AG14	DDR3_D29	15
IO_L4P_T0_32_AF15	AF15	DDR3_D27	15
IO_L3N_T0_DQS_32_AJ16	AJ16	DDR3_DQS3_N	15
IO_L3P_T0_DQS_32_AH16	AH16	DDR3_DQS3_P	15
IO_L2N_T0_32_AH15	AH15	DDR3_D30	15
IO_L2P_T0_32_AG15	AG15	DDR3_D26	15
IO_L1N_T0_32_AK15	AK15	DDR3_D31	15
IO_L1P_T0_32_AK16	AK16	DDR3_D24	15
IO_0_VRN_32_Y14	Y14	PMBUS_DATA_LS	35

VCC1V5_FPGA

AJ15	VCCO_32_AJ15	
AH18	VCCO_32_AH18	
AF14	VCCO_32_AF14	
AE17	VCCO_32_AE17	
AB16	VCCO_32_AB16	
AA19	VCCO_32_AA19	

U1

SOC_K7_325T_FF900_IRON

SOC_K7_325T_FF900_IRON

BANK 33
XC7K325TFFG900

IO_25_VRP_33_AD13	AD13	VRP_33	7
IO_L24N_T3_33_AH12	AH12	DDR3_A0	15
IO_L24P_T3_33_AG13	AG13	DDR3_A1	15
IO_L23N_T3_33_AG12	AG12	DDR3_A2	15
IO_L23P_T3_33_AF12	AF12	DDR3_A3	15
IO_L22N_T3_33_AJ12	AJ12	DDR3_A4	15
IO_L22P_T3_33_AJ13	AJ13	DDR3_A5	15
IO_L21N_T3_DQS_33_AJ14	AJ14	DDR3_A6	15
IO_L21P_T3_DQS_33_AH14	AH14	DDR3_A7	15
IO_L20N_T3_33_AK13	AK13	DDR3_A8	15
IO_L20P_T3_33_AK14	AK14	DDR3_A9	15
IO_L19N_T3_VREF_33_AF13	AF13	DDR3_A10	15
IO_L19P_T3_33_AE13	AE13	DDR3_A11	15
IO_L18N_T2_33_AJ11	AJ11	DDR3_A12	15
IO_L18P_T2_33_AH11	AH11	DDR3_A13	15
IO_L17N_T2_33_AK10	AK10	DDR3_A14	15
IO_L17P_T2_33_AK11	AK11	DDR3_A15	15
IO_L16N_T2_33_AH9	AH9	DDR3_BA0	15
IO_L16P_T2_33_AG9	AG9	DDR3_BA1	15
IO_L15N_T2_DQS_33_AK9	AK9	DDR3_BA2	15
IO_L15P_T2_DQS_33_AJ9	AJ9	DDR3_TEMP_EVENT	15
IO_L14N_T2_SRCC_33_AF10	AF10	DDR3_CKE0	15
IO_L14P_T2_SRCC_33_AE10	AE10	DDR3_CKE1	15
IO_L13N_T2_MRCC_33_AH10	AH10	DDR3_CLK0_N	15
IO_L13P_T2_MRCC_33_AG10	AG10	DDR3_CLK0_P	15
IO_L12N_T1_MRCC_33_AD11	AD11	SYSCLK_N	23
IO_L12P_T1_MRCC_33_AD12	AD12	SYSCLK_P	23
IO_L11N_T1_SRCC_33_AF11	AF11	DDR3_CLK1_N	15
IO_L11P_T1_SRCC_33_AE11	AE11	DDR3_CLK1_P	15
IO_L10N_T1_33_AE9	AE9	DDR3_WE_B	15
IO_L10P_T1_33_AD9	AD9	DDR3_RAS_B	15
IO_L9N_T1_DQS_33_AC11	AC11	DDR3_CAS_B	15
IO_L9P_T1_DQS_33_AC12	AC12	DDR3_S0_B	15
IO_L8N_T1_33_AE8	AE8	DDR3_S1_B	15
IO_L8P_T1_33_AD8	AD8	DDR3_ODT0	15
IO_L7N_T1_33_AC10	AC10	DDR3_ODT1	15
IO_L7P_T1_33_AB10	AB10	LCD_E_LS	30
IO_L6N_T0_VREF_33_AB13	AB13	LCD_RW_LS	30
IO_L6P_T0_33_AA13	AA13	LCD_DB4_LS	30
IO_L5N_T0_33_AA10	AA10	LCD_DB5_LS	30
IO_L5P_T0_33_AA11	AA11	LCD_DB6_LS	30
IO_L4N_T0_33_Y10	Y10	LCD_DB7_LS	30
IO_L4P_T0_33_Y11	Y11	LCD_RS_LS	30
IO_L3N_T0_DQS_33_AC9	AC9	GPIO_LED_2_LS	30
IO_L3P_T0_DQS_33_AB9	AB9	GPIO_LED_3_LS	30
IO_L2N_T0_33_AB8	AB8	GPIO_LED_0_LS	30
IO_L2P_T0_33_AA8	AA8	GPIO_LED_1_LS	30
IO_L1N_T0_33_AB12	AB12	GPIO_SW_S	29
IO_L1P_T0_33_AA12	AA12	GPIO_SW_N	29
IO_0_VRN_33_Y13	Y13	VRN_33	7

VCC1V5_FPGA

Y12	VCCO_33_Y12	
AK12	VCCO_33_AK12	
AG11	VCCO_33_AG11	
AD10	VCCO_33_AD10	
AC13	VCCO_33_AC13	
AA9	VCCO_33_AA9	

U1

SOC_K7_325T_FF900_IRON

VCC1V5_FPGA

R413
80.6
1/10W
1%

7 VRN_33

7 VRP_33

R414
80.6
1/10W
1%

GND

FPGA Banks 32, 33

XILINX

Title:	FPGA Banks 32, 33 SCHEM, ROHS COMPLIANT KC705 EVALUATION PLATFORM	ASSY P/N: 0431641 PCB P/N: 1280565 SCH P/N: 0381397	
Date:	4-2-2012_15:15	Ver:	1.1
Sheet Size: B		Rev:	01
Sheet	7 of 47	Drawn By	BF

SOC_K7_325T_FF900_IRON

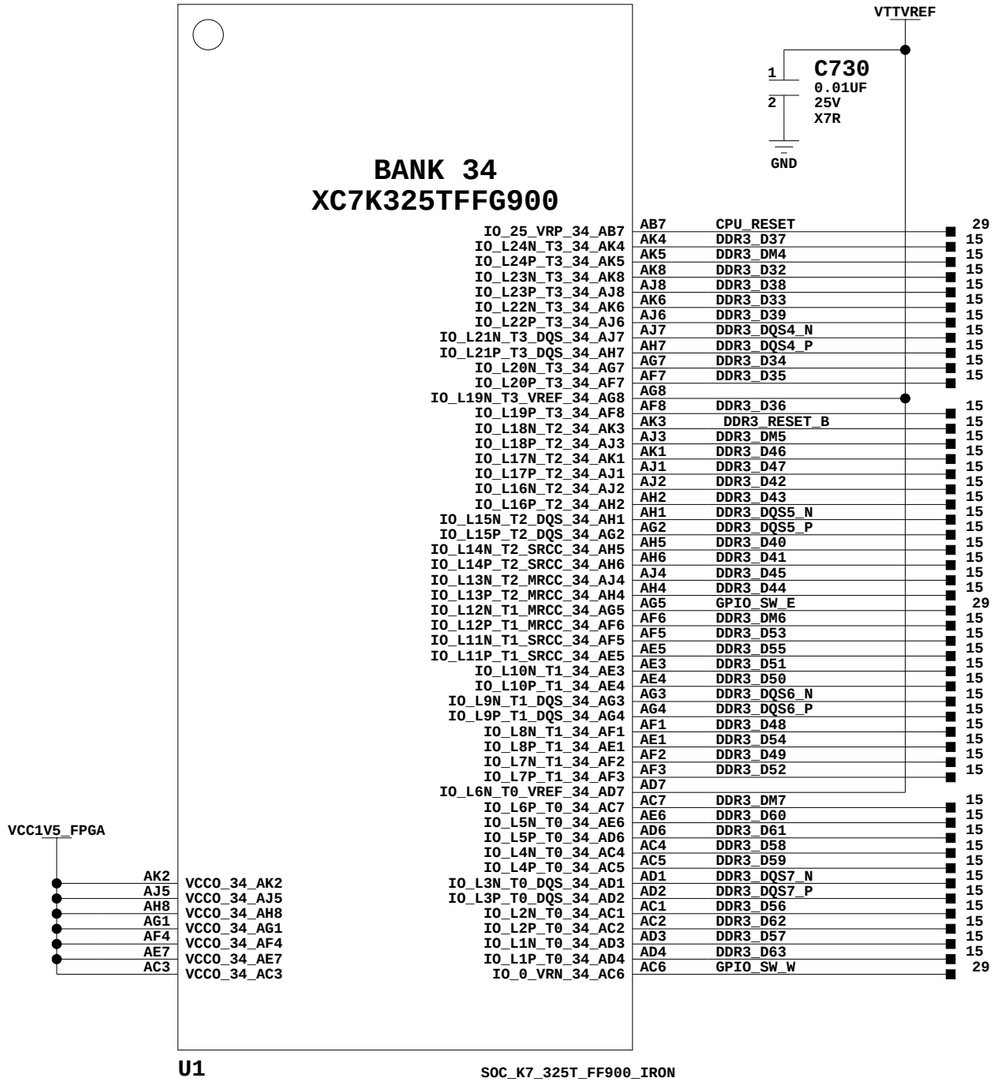

FPGA Bank 34

XILINX

Title:	FPGA Bank 34 SCHEM, ROHS COMPLIANT KC705 EVALUATION PLATFORM	ASSY P/N: PCB P/N: SCH P/N:	0431641 1280565 0381397
Date:	4-2-2012_15:15	Ver:	1.1
Sheet Size: B		Rev:	01
Sheet	8 of 47	Drawn By	BF

SOC_K7_325T_FF900_IRON

BANK 115
XC7K325TFFG900

MGTXTXP0_115_Y2	Y2	PCIE_TX7_P	21
MGTXTXN0_115_Y1	Y1	PCIE_TX7_N	21
MGTXRXP0_115_AA4	AA4	PCIE_RX7_P	21
MGTXRXN0_115_AA3	AA3	PCIE_RX7_N	21
MGTXTXP1_115_V2	V2	PCIE_TX6_P	21
MGTXTXN1_115_V1	V1	PCIE_TX6_N	21
MGTXRXP1_115_Y6	Y6	PCIE_RX6_P	21
MGTXRXN1_115_Y5	Y5	PCIE_RX6_N	21
MGTXTXP2_115_U4	U4	PCIE_TX5_P	21
MGTXTXN2_115_U3	U3	PCIE_TX5_N	21
MGTXRXP2_115_W4	W4	PCIE_RX5_P	21
MGTXRXN2_115_W3	W3	PCIE_RX5_N	21
MGTXTXP3_115_T2	T2	PCIE_TX4_P	21
MGTXTXN3_115_T1	T1	PCIE_TX4_N	21
MGTXRXP3_115_V6	V6	PCIE_RX4_P	21
MGTXRXN3_115_V5	V5	PCIE_RX4_N	21
MGTREFCLK0P_115_R8	R8	NC	
MGTREFCLK0N_115_R7	R7	NC	
MGTREFCLK1P_115_U8	U8	PCIE_CLK_QO_P	21
MGTREFCLK1N_115_U7	U7	PCIE_CLK_QO_N	21
MGTAVTTRCAL_115_W7	W7		
MGTRREF_115_W8	W8		

MGTAVTT

R234 100 1/10W 1%

U1

SOC_K7_325T_FF900_IRON

SOC_K7_325T_FF900_IRON

BANK 116
XC7K325TFFG900

MGTXTXP0_116_P2	P2	PCIE_TX3_P	21
MGTXTXN0_116_P1	P1	PCIE_TX3_N	21
MGTXRXP0_116_T6	T6	PCIE_RX3_P	21
MGTXRXN0_116_T5	T5	PCIE_RX3_N	21
MGTXTXP1_116_N4	N4	PCIE_TX2_P	21
MGTXTXN1_116_N3	N3	PCIE_TX2_N	21
MGTXRXP1_116_R4	R4	PCIE_RX2_P	21
MGTXRXN1_116_R3	R3	PCIE_RX2_N	21
MGTXTXP2_116_M2	M2	PCIE_TX1_P	21
MGTXTXN2_116_M1	M1	PCIE_TX1_N	21
MGTXRXP2_116_P6	P6	PCIE_RX1_P	21
MGTXRXN2_116_P5	P5	PCIE_RX1_N	21
MGTXTXP3_116_L4	L4	PCIE_TX0_P	21
MGTXTXN3_116_L3	L3	PCIE_TX0_N	21
MGTXRXP3_116_M6	M6	PCIE_RX0_P	21
MGTXRXN3_116_M5	M5	PCIE_RX0_N	21
MGTREFCLK0P_116_L8	L8	SI5326_OUT_C_P	24
MGTREFCLK0N_116_L7	L7	SI5326_OUT_C_N	24
MGTREFCLK1P_116_N8	N8	FMC_LPC_GBTCLK0_M2C_C_P	9
MGTREFCLK1N_116_N7	N7	FMC_LPC_GBTCLK0_M2C_C_N	9

U1

SOC_K7_325T_FF900_IRON

SOC_K7_325T_FF900_IRON

BANK 117
XC7K325TFFG900

MGTXTXP0_117_K2	K2	SMA_MGT_TX_P	23
MGTXTXN0_117_K1	K1	SMA_MGT_TX_N	23
MGTXRXP0_117_K6	K6	SMA_MGT_RX_P	23
MGTXRXN0_117_K5	K5	SMA_MGT_RX_N	23
MGTXTXP1_117_J4	J4	SGMII_TX_P	25
MGTXTXN1_117_J3	J3	SGMII_TX_N	25
MGTXRXP1_117_H6	H6	SGMII_RX_P	25
MGTXRXN1_117_H5	H5	SGMII_RX_N	25
MGTXTXP2_117_H2	H2	SFP_TX_P	22
MGTXTXN2_117_H1	H1	SFP_TX_N	22
MGTXRXP2_117_G4	G4	SFP_RX_P	22
MGTXRXN2_117_G3	G3	SFP_RX_N	22
MGTXTXP3_117_F2	F2	FMC_LPC_DP0_C2M_P	20
MGTXTXN3_117_F1	F1	FMC_LPC_DP0_C2M_N	20
MGTXRXP3_117_F6	F6	FMC_LPC_DP0_M2C_P	20
MGTXRXN3_117_F5	F5	FMC_LPC_DP0_M2C_N	20
MGTREFCLK0P_117_G8	G8	SGMIICLK_Q0_P	23
MGTREFCLK0N_117_G7	G7	SGMIICLK_Q0_N	23
MGTREFCLK1P_117_J8	J8	SMA_MGT_REFCLK_P	23
MGTREFCLK1N_117_J7	J7	SMA_MGT_REFCLK_N	23

U1

SOC_K7_325T_FF900_IRON

SOC_K7_325T_FF900_IRON

BANK 118
XC7K325TFFG900

MGTXTXP0_118_D2	D2	FMC_HPC_DP0_C2M_P	16
MGTXTXN0_118_D1	D1	FMC_HPC_DP0_C2M_N	16
MGTXRXP0_118_E4	E4	FMC_HPC_DP0_M2C_P	16
MGTXRXN0_118_E3	E3	FMC_HPC_DP0_M2C_N	16
MGTXTXP1_118_C4	C4	FMC_HPC_DP1_C2M_P	16
MGTXTXN1_118_C3	C3	FMC_HPC_DP1_C2M_N	16
MGTXRXP1_118_D6	D6	FMC_HPC_DP1_M2C_P	16
MGTXRXN1_118_D5	D5	FMC_HPC_DP1_M2C_N	16
MGTXTXP2_118_B2	B2	FMC_HPC_DP2_C2M_P	16
MGTXTXN2_118_B1	B1	FMC_HPC_DP2_C2M_N	16
MGTXRXP2_118_B6	B6	FMC_HPC_DP2_M2C_P	16
MGTXRXN2_118_B5	B5	FMC_HPC_DP2_M2C_N	16
MGTXTXP3_118_A4	A4	FMC_HPC_DP3_C2M_P	16
MGTXTXN3_118_A3	A3	FMC_HPC_DP3_C2M_N	16
MGTXRXP3_118_A8	A8	FMC_HPC_DP3_M2C_P	16
MGTXRXN3_118_A7	A7	FMC_HPC_DP3_M2C_N	16
MGTREFCLK0P_118_C8	C8	FMC_HPC_GBTCLK0_M2C_C_P	9
MGTREFCLK0N_118_C7	C7	FMC_HPC_GBTCLK0_M2C_C_N	9
MGTREFCLK1P_118_E8	E8	FMC_HPC_GBTCLK1_M2C_C_P	9
MGTREFCLK1N_118_E7	E7	FMC_HPC_GBTCLK1_M2C_C_N	9

U1

SOC_K7_325T_FF900_IRON

C181 0.1UF 25V X5R
C182 0.1UF 25V X5R
C720 0.1UF 25V X5R
C721 0.1UF 25V X5R

16	FMC_HPC_GBTCLK0_M2C_P	FMC_HPC_GBTCLK0_M2C_C_P	9
16	FMC_HPC_GBTCLK0_M2C_N	FMC_HPC_GBTCLK0_M2C_C_N	9
16	FMC_HPC_GBTCLK1_M2C_P	FMC_HPC_GBTCLK1_M2C_C_P	9
16	FMC_HPC_GBTCLK1_M2C_N	FMC_HPC_GBTCLK1_M2C_C_N	9

C183 0.1UF 25V X5R
C184 0.1UF 25V X5R

20	FMC_LPC_GBTCLK0_M2C_P	FMC_LPC_GBTCLK0_M2C_C_P	9
20	FMC_LPC_GBTCLK0_M2C_N	FMC_LPC_GBTCLK0_M2C_C_N	9

FPGA GT Banks

XILINX

Title:	FPGA GT Banks SCHEM, ROHS COMPLIANT KC705 EVALUATION PLATFORM	ASSY P/N:	0431641
		PCB P/N:	1280565
		SCH P/N:	0381397
Date:	4-2-2012_15:15	Ver:	1.1
Sheet Size: B		Rev:	01
Sheet	9 of 47	Drawn By	BF

SOC_K7_325T_FF900_IRON

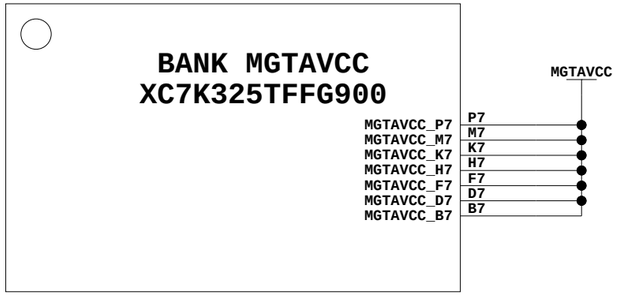

U1 SOC_K7_325T_FF900_IRON

SOC_K7_325T_FF900_IRON

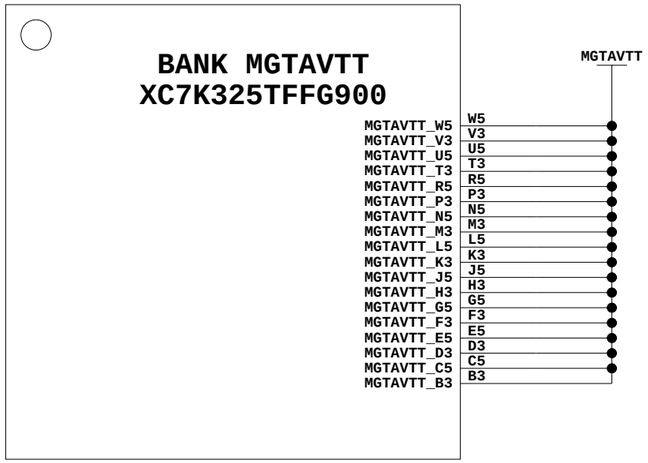

U1 SOC_K7_325T_FF900_IRON

SOC_K7_325T_FF900_IRON

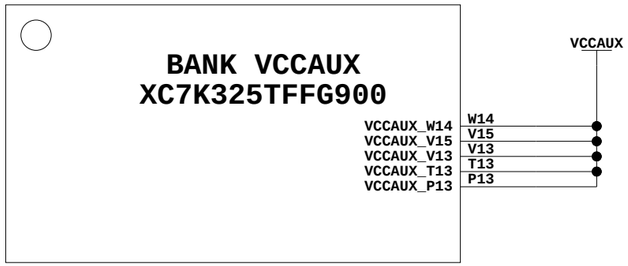

U1 SOC_K7_325T_FF900_IRON

SOC_K7_325T_FF900_IRON

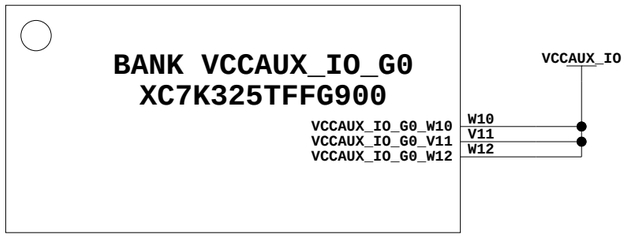

U1 SOC_K7_325T_FF900_IRON

SOC_K7_325T_FF900_IRON

U1 SOC_K7_325T_FF900_IRON

SOC_K7_325T_FF900_IRON

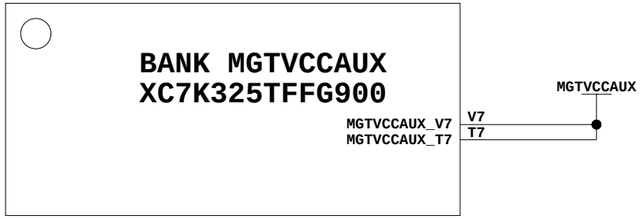

U1 SOC_K7_325T_FF900_IRON

SOC_K7_325T_FF900_IRON

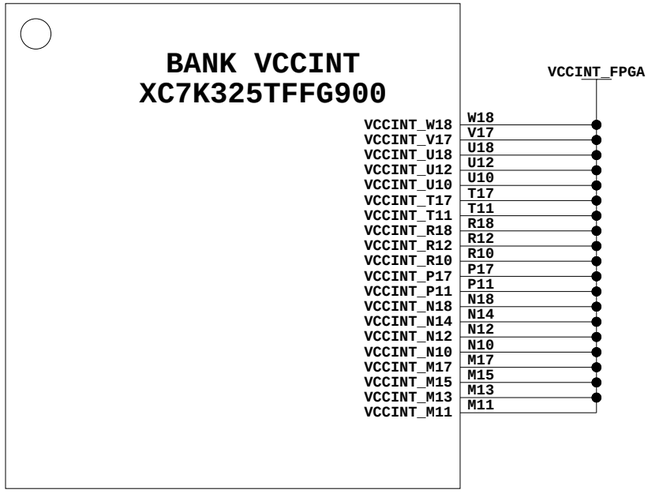

U1 SOC_K7_325T_FF900_IRON

FPGA Power Pins

XILINX

Title:	FPGA Power Pins SCHEM, ROHS COMPLIANT KC705 EVALUATION PLATFORM	ASSY P/N: 0431641 PCB P/N: 1280565 SCH P/N: 0381397	
Date:	4-2-2012_15:15	Ver:	1.1
Sheet Size: B		Rev:	01
Sheet	10 of 47	Drawn By	BF

SOC_K7_325T_FF900_IRON

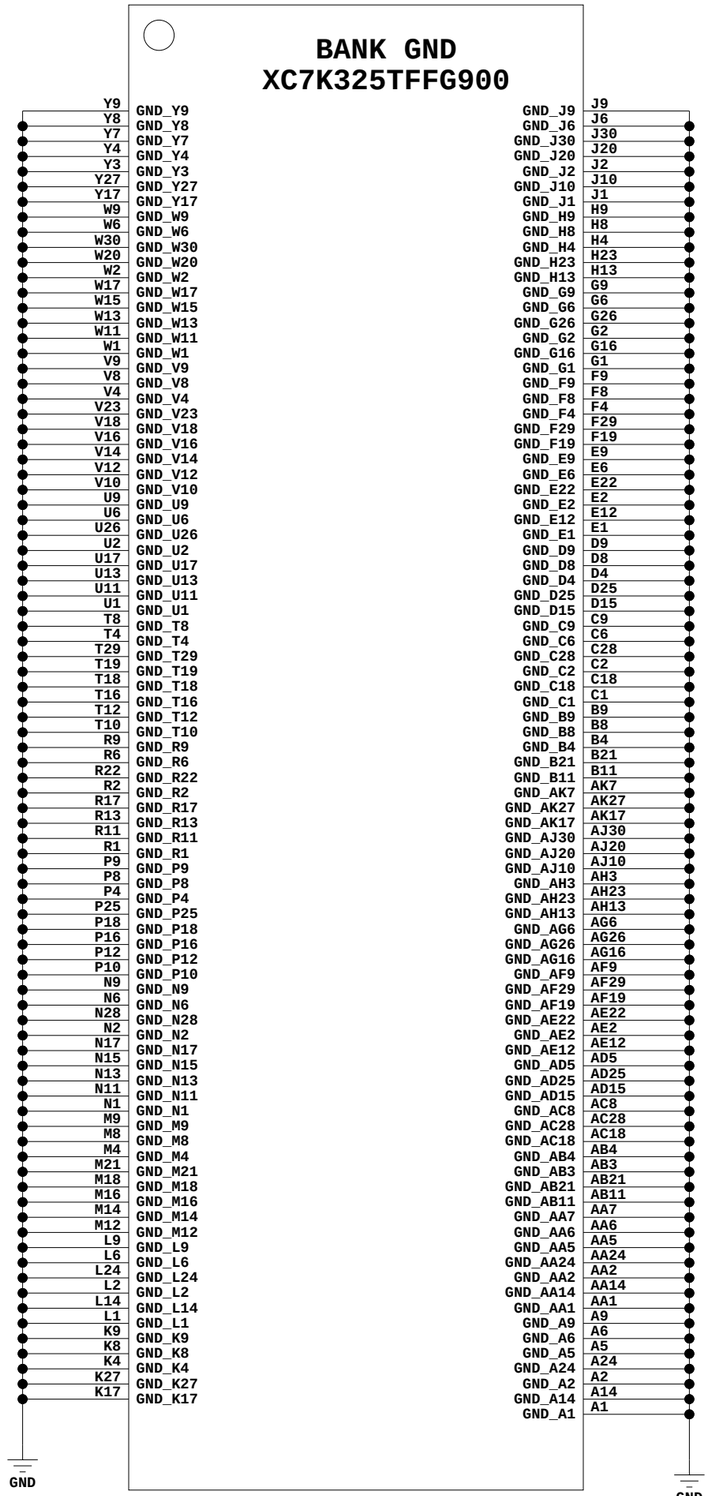

FPGA GND

XILINX

Title:	FPGA GND SCHEM, ROHS COMPLIANT KC705 EVALUATION PLATFORM	ASSY P/N: 0431641 PCB P/N: 1280565 SCH P/N: 0381397	
Date:	4-2-2012_15:15	Ver:	1.1
Sheet Size: B		Rev:	01
Sheet	11 of 47	Drawn By	BF

BYPASS CAPACITORS

VCCINT 330uF (5)

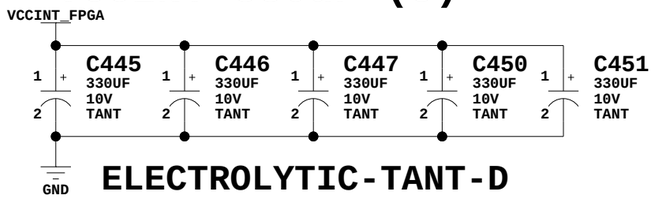

ELECTROLYTIC-TANT-D

VCCBRAM 330uF (1) ELEC-TANT-D, 4.7uF (9) 0402

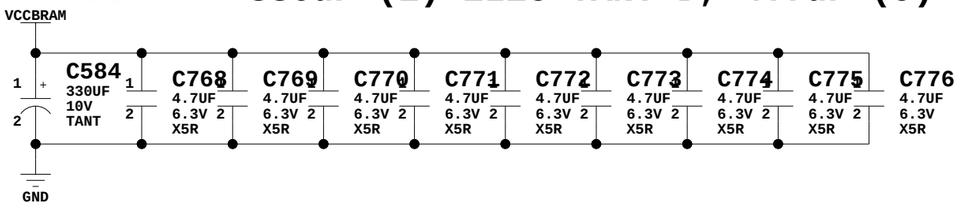

VCCAUX

VCCAUX 47uF - 1210 (3)

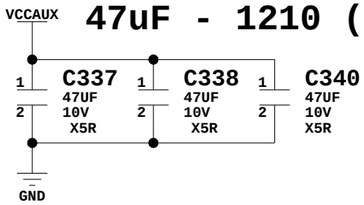

VCCAUX_IO

VCCAUX_IO 47uF - 1210 (1)

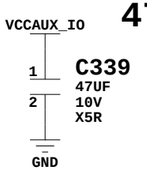

Bank 0 2.5V VCCO

100uF - 1210 (1)

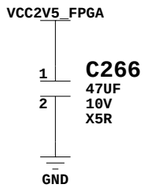

Banks 12, 13, 16, 17, and 18 VADJ VCCO

VADJ_FPGA 100uF - 1210 (5)

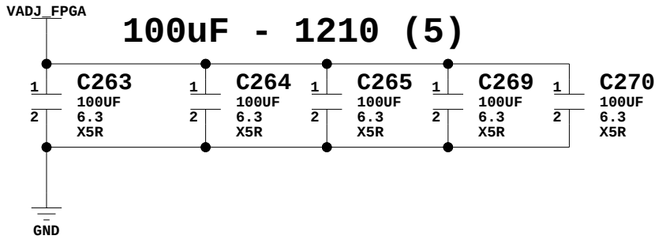

Banks 14, 15 2.5V VCCO

VCC2V5_FPGA 100uF - 1210 (2)

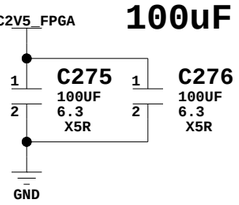

Banks 32, 33, 34 1.5V VCCO

VCC1V5_FPGA 100uF - 1210 (3)

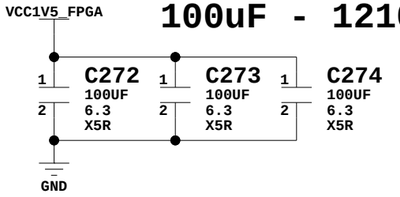

FPGA Bypass Capacitors

XILINX

Title:	FPGA Bypass Capacitors SCHEM, ROHS COMPLIANT KC705 EVALUATION PLATFORM	ASSY P/N: 0431641 PCB P/N: 1280565 SCH P/N: 0381397	
Date:	4-2-2012_15:15	Ver:	1.1
Sheet Size: B		Rev:	01
Sheet	12 of 47	Drawn By	BF

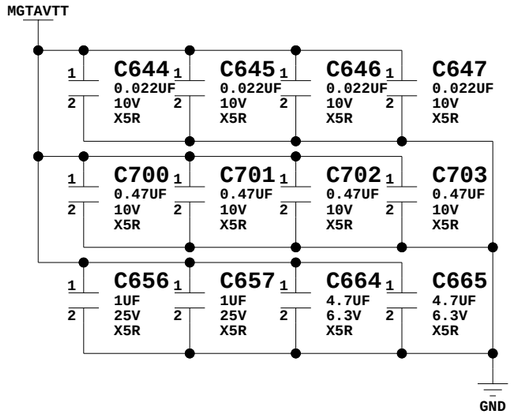

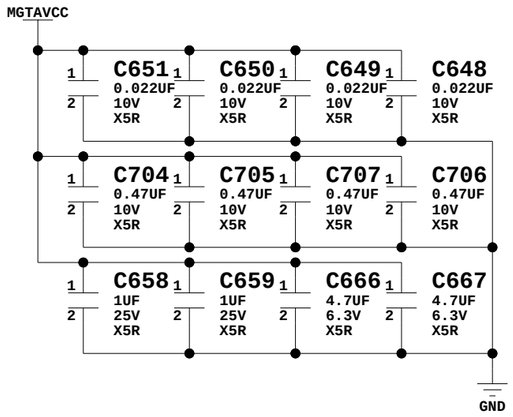

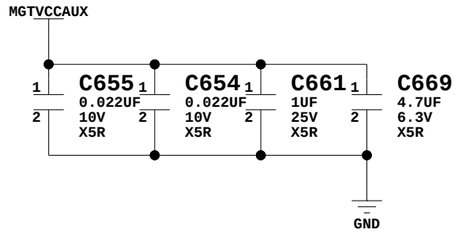

FPGA MGT Bypass Capacitors

Title:	HDMI SERIES RESISTORS AT FPGA SCHEM, ROHS COMPLIANT KC705 EVALUATION PLATFORM	ASSY P/N: PCB P/N: SCH P/N:	0431641 1280565 0381397
Date:	4-2-2012_15:15	Ver:	1.1
Sheet Size: B		Rev:	01
Sheet	13 of 47	Drawn By	BF

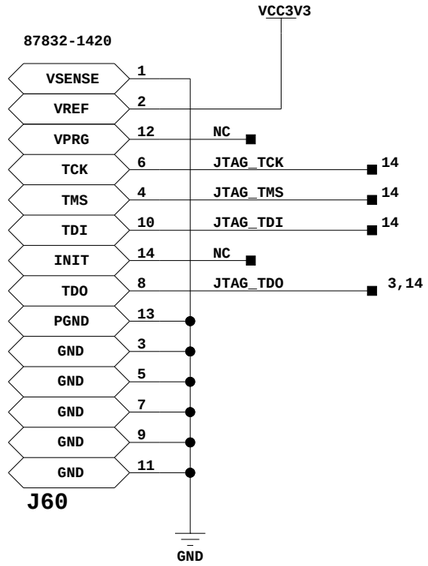

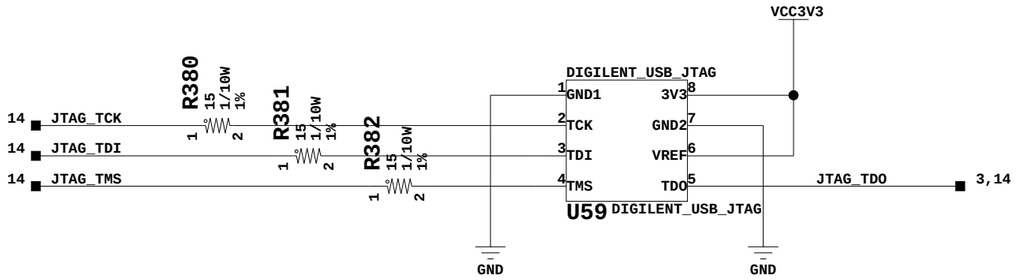

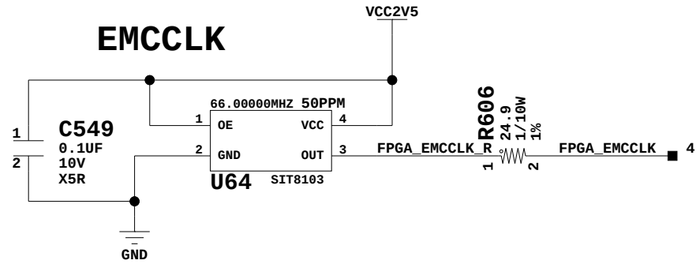

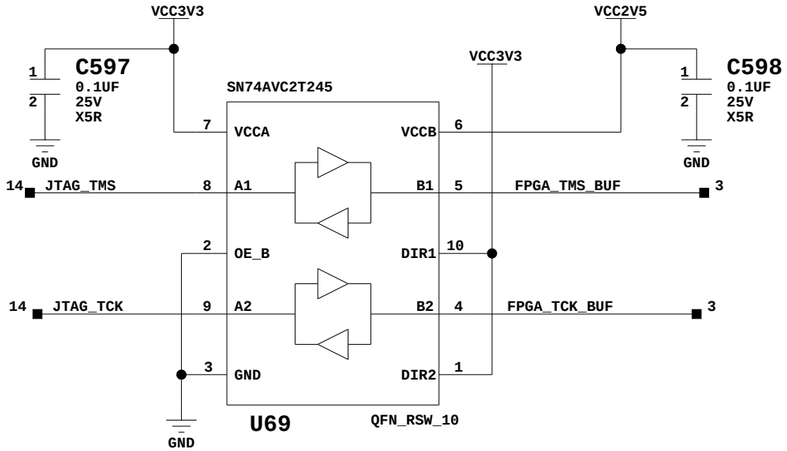

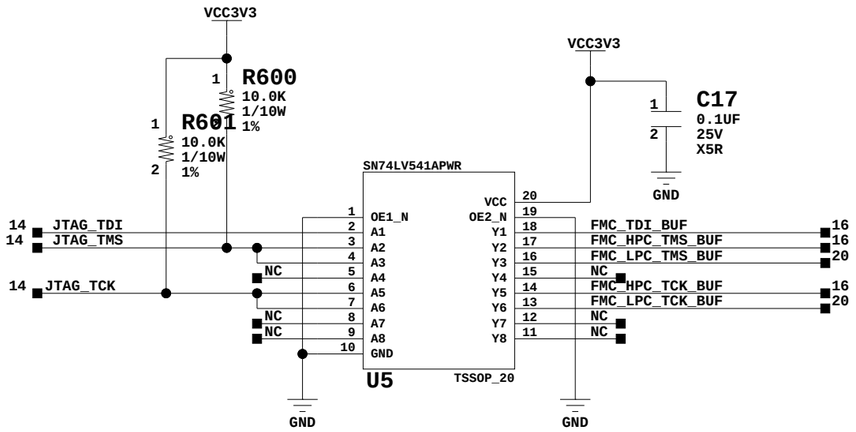

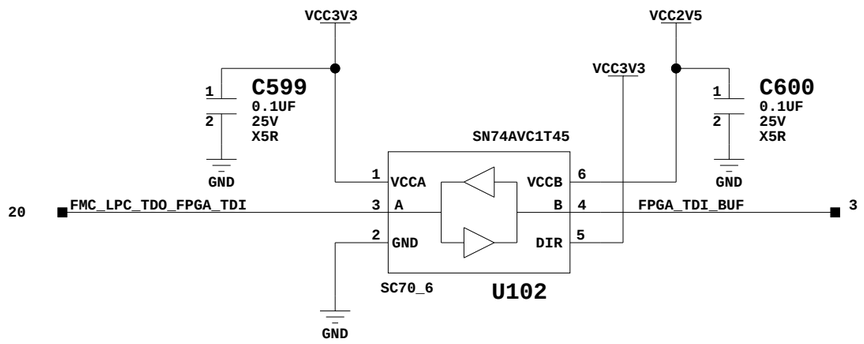

JTAG Buffer, USB JTAG Module, JTAG Header

Title:	JTAG Buffer, USB JTAG Module, JTAG Header SCHEM, ROHS COMPLIANT KC705 EVALUATION PLATFORM	ASSY P/N: PCB P/N: SCH P/N:	0431641 1280565 0381397
Date:	4-2-2012_15:15	Ver:	1.1
Sheet Size: B		Rev:	01
Sheet	14 of 47	Drawn By	BF

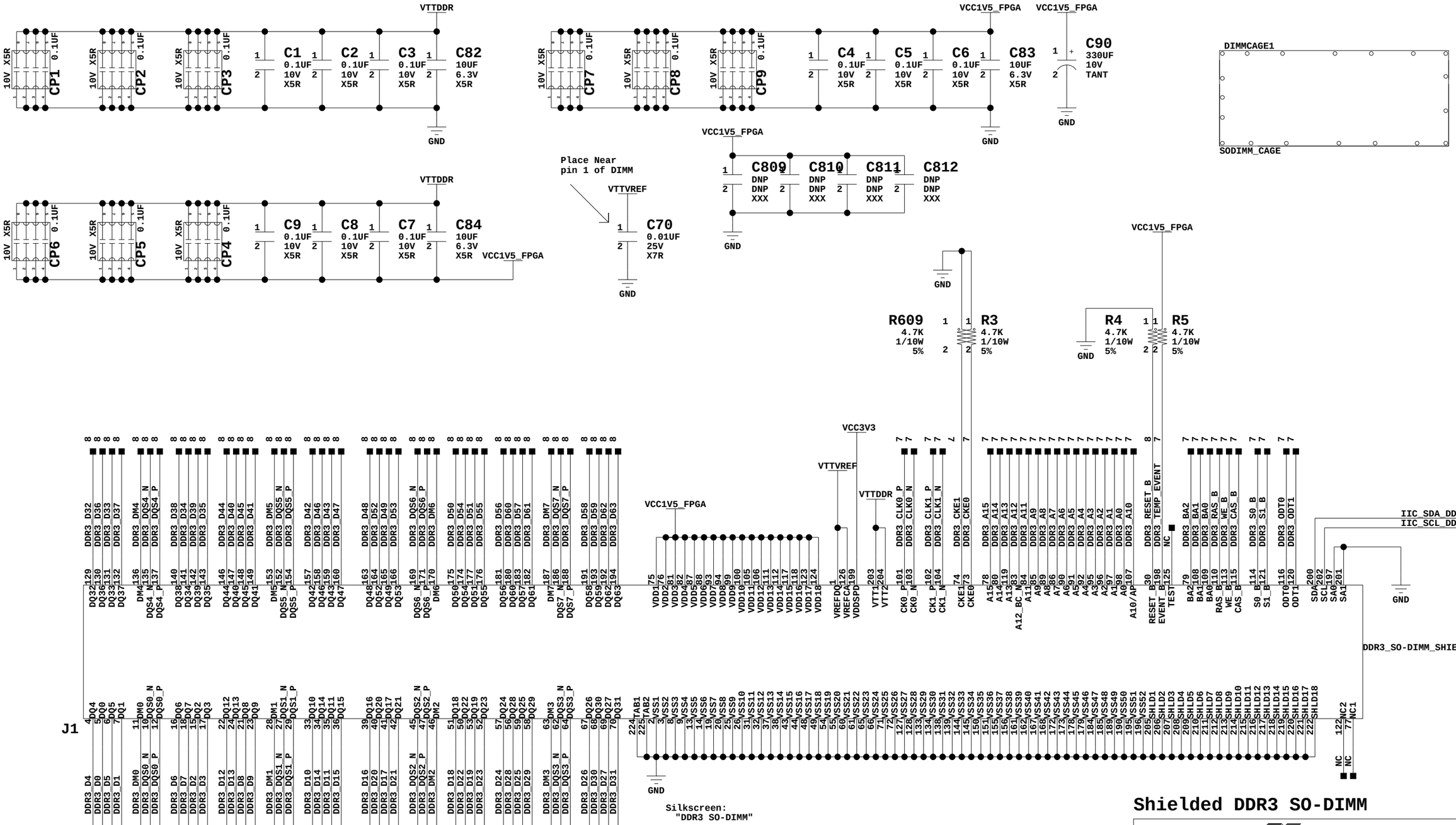

Shielded DDR3 SO-DIMM

Title:	Shielded DDR3 SO-DIMM SCHEM, ROHS COMPLIANT KC705 EVALUATION PLATFORM	ASSY P/N: 0431641 PCB P/N: 1280565 SCH P/N: 0381397
Date:	4-2-2012_15:15	Ver: 1.1
Sheet Size: B		Rev: 01
Sheet	15 of 47	Drawn By BF

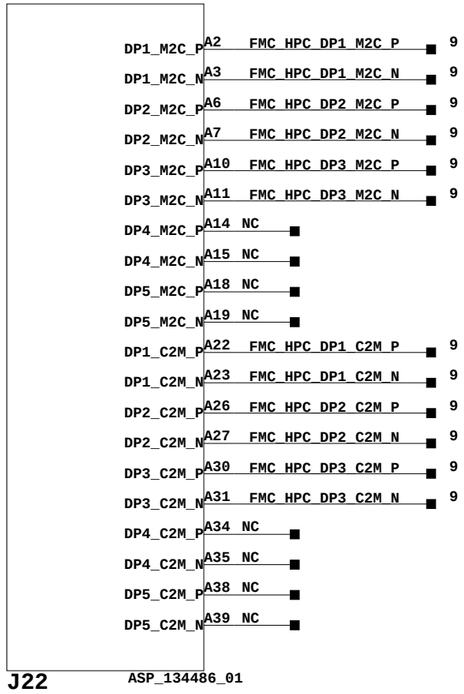

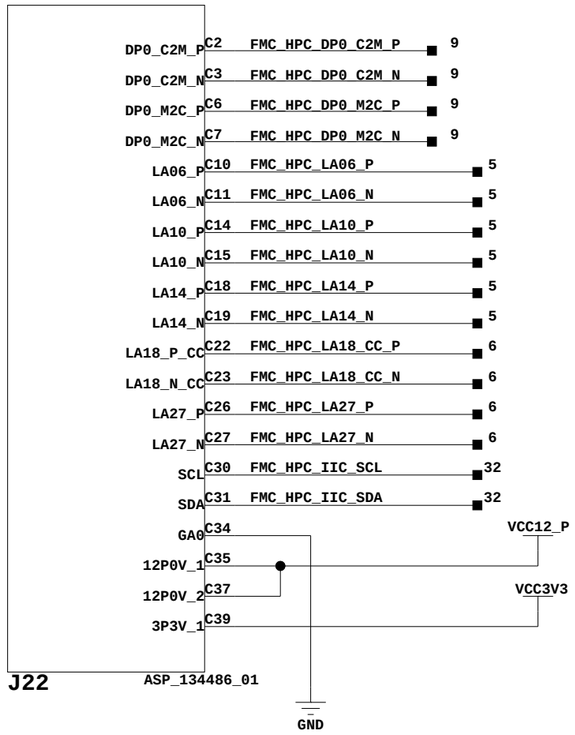

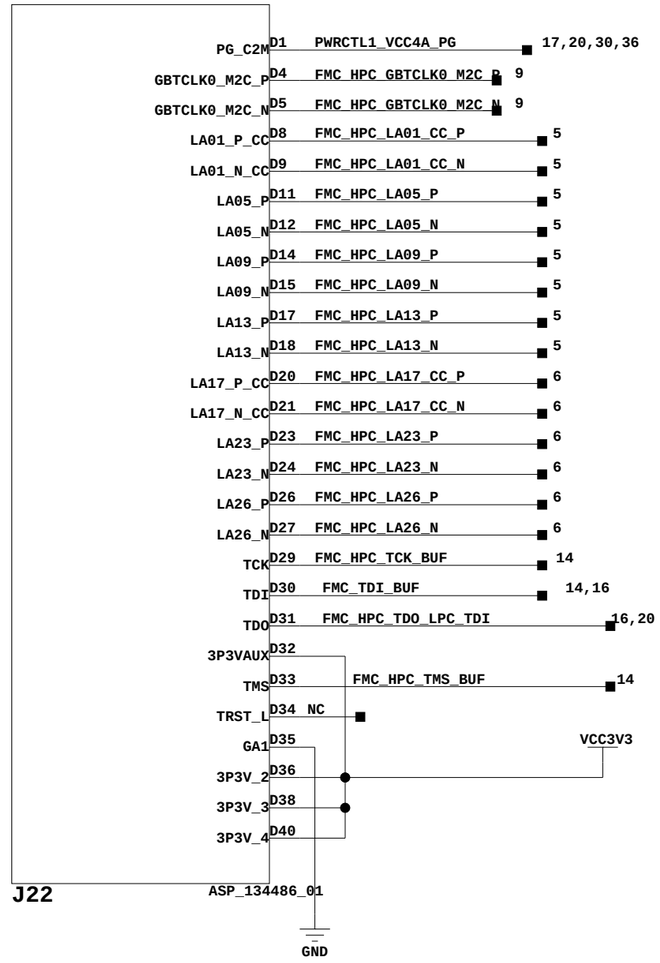

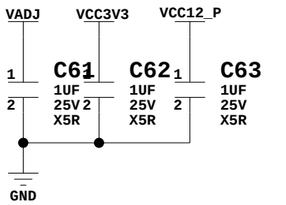

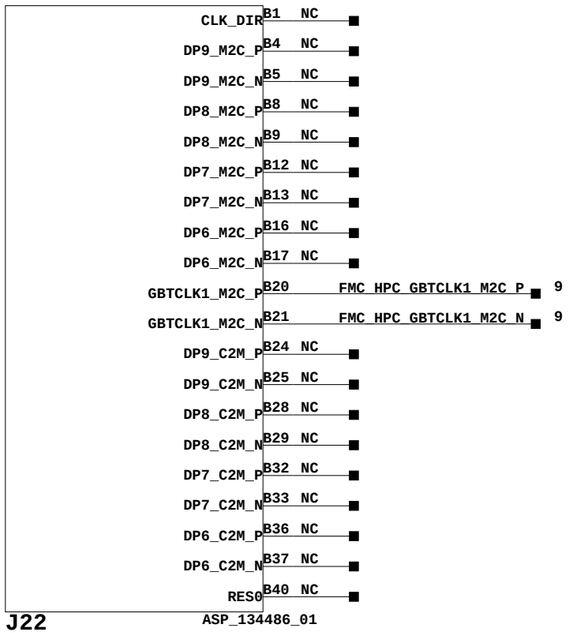

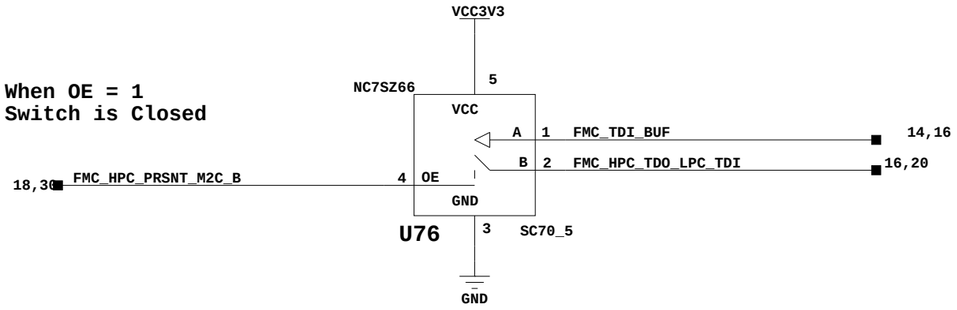

ANSI/VITA 57.1 - Revised 2010
FMC HPC Header, Rows A, B, C, D

Title:	FMC HPC Header, Rows A, B, C, D SCHEM, ROHS COMPLIANT KC705 EVALUATION PLATFORM	ASSY P/N: 0431641 PCB P/N: 1280565 SCH P/N: 0381397	
Date:	4-2-2012_15:15	Ver:	1.1
Sheet Size: B		Rev:	01
Sheet	16 of 47	Drawn By	BF

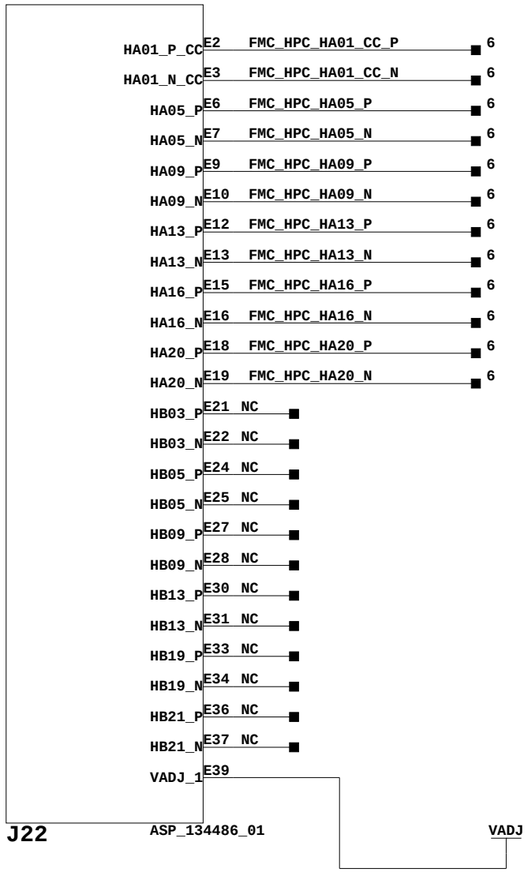

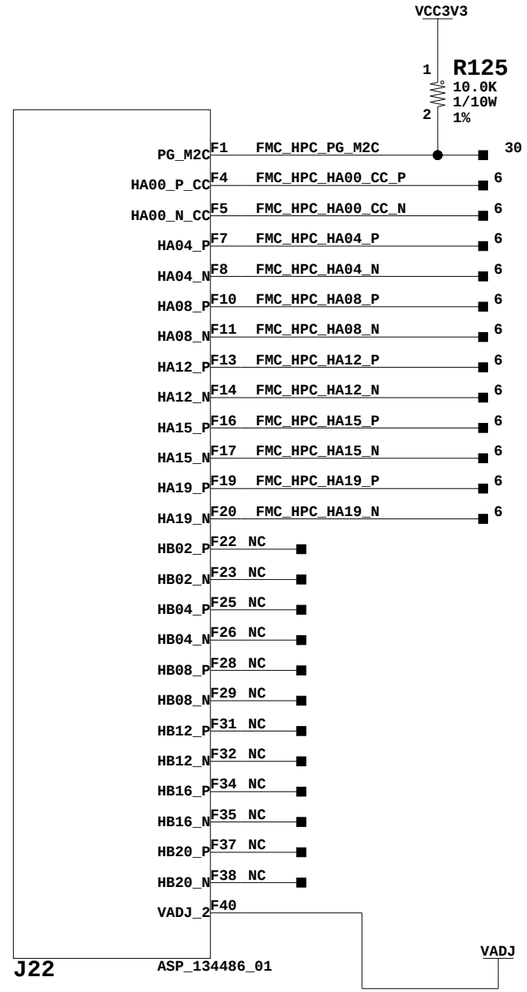

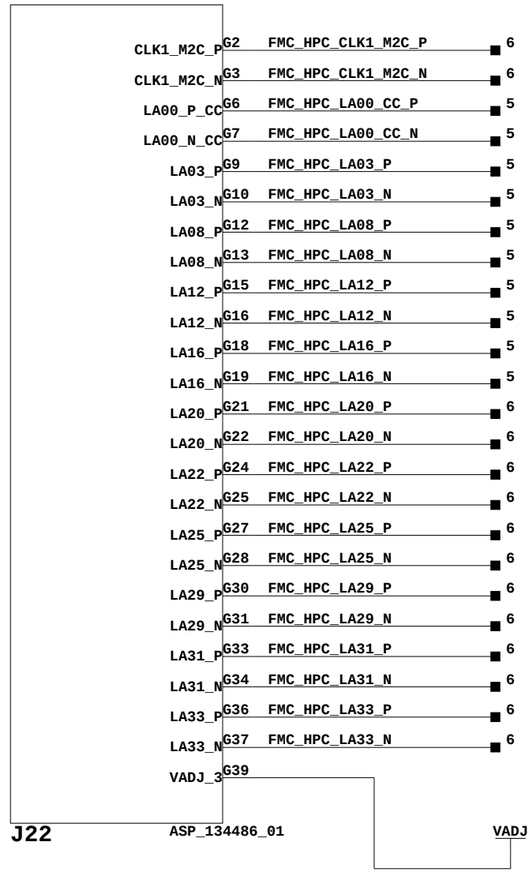

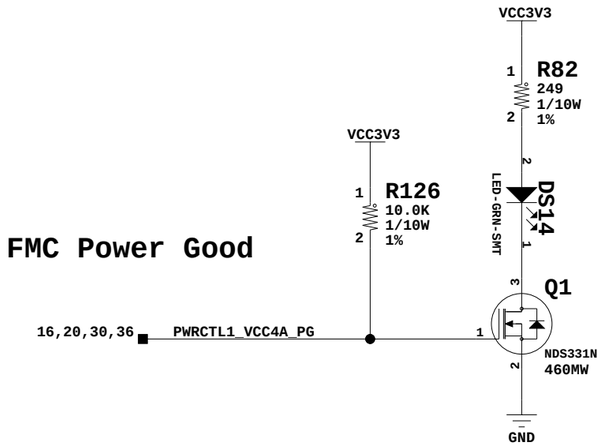

ANSI/VITA 57.1 - Revised 2010
FMC HPC Header, Rows E, F, G

XILINX

Title:	FMC HPC Header, Rows E, F, G SCHEM, ROHS COMPLIANT KC705 EVALUATION PLATFORM	ASSY P/N: 0431641 PCB P/N: 1280565 SCH P/N: 0381397	
Date:	4-2-2012_15:15	Ver:	1.1
Sheet Size: B		Rev:	01
Sheet	17 of 47	Drawn By	BF

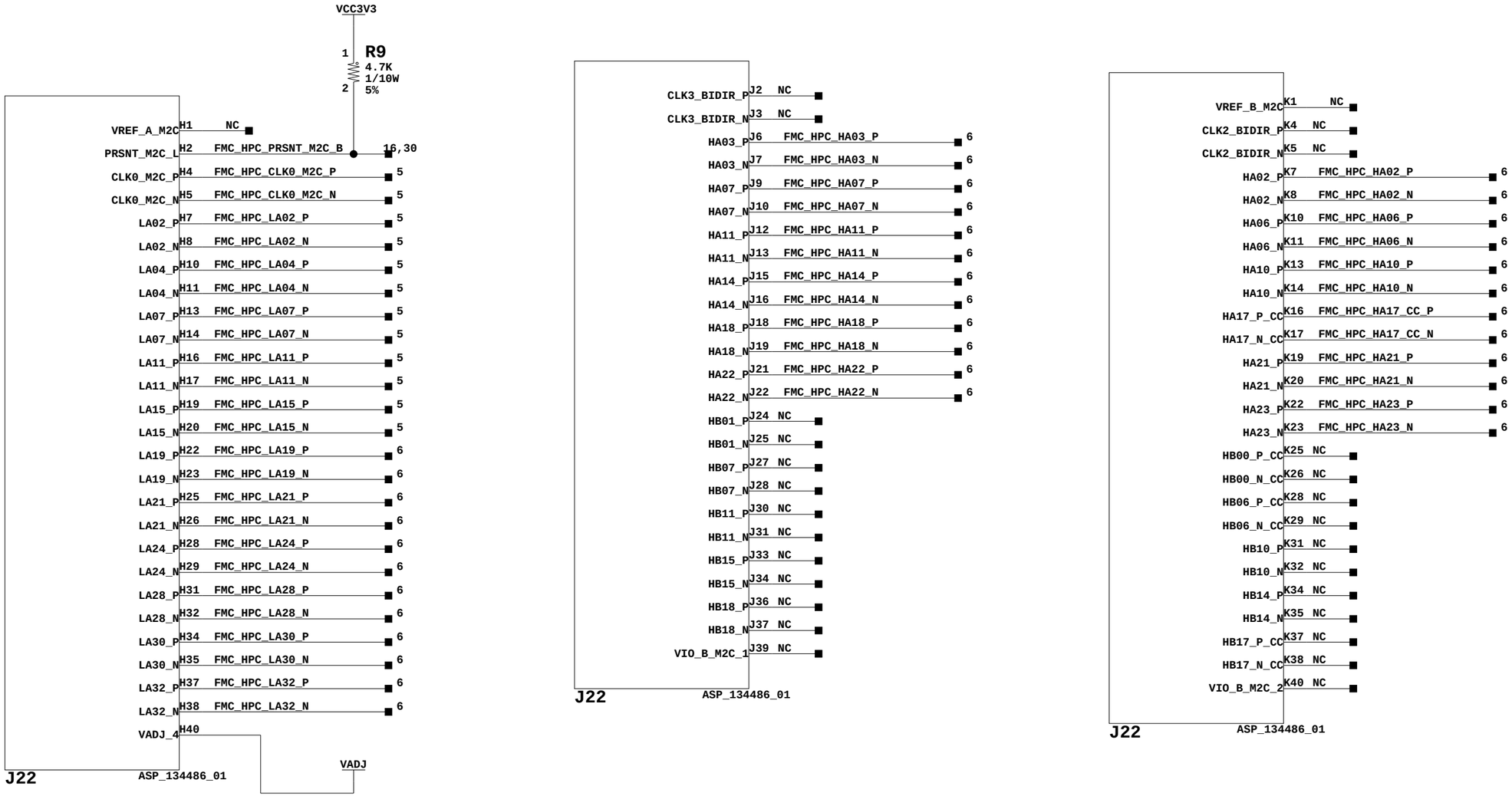

ANSI/VITA 57.1 - Revised 2010
FMC HPC Header, Rows H, J, K

XILINX

Title:	FMC HPC Header, Rows H, J, K SCHEM, ROHS COMPLIANT KC705 EVALUATION PLATFORM	ASSY P/N:	0431641
		PCB P/N:	1280565
		SCH P/N:	0381397
Date:	4-2-2012_15:15	Ver:	1.1
Sheet Size: B		Rev:	01
Sheet	18 of 47	Drawn By	BF

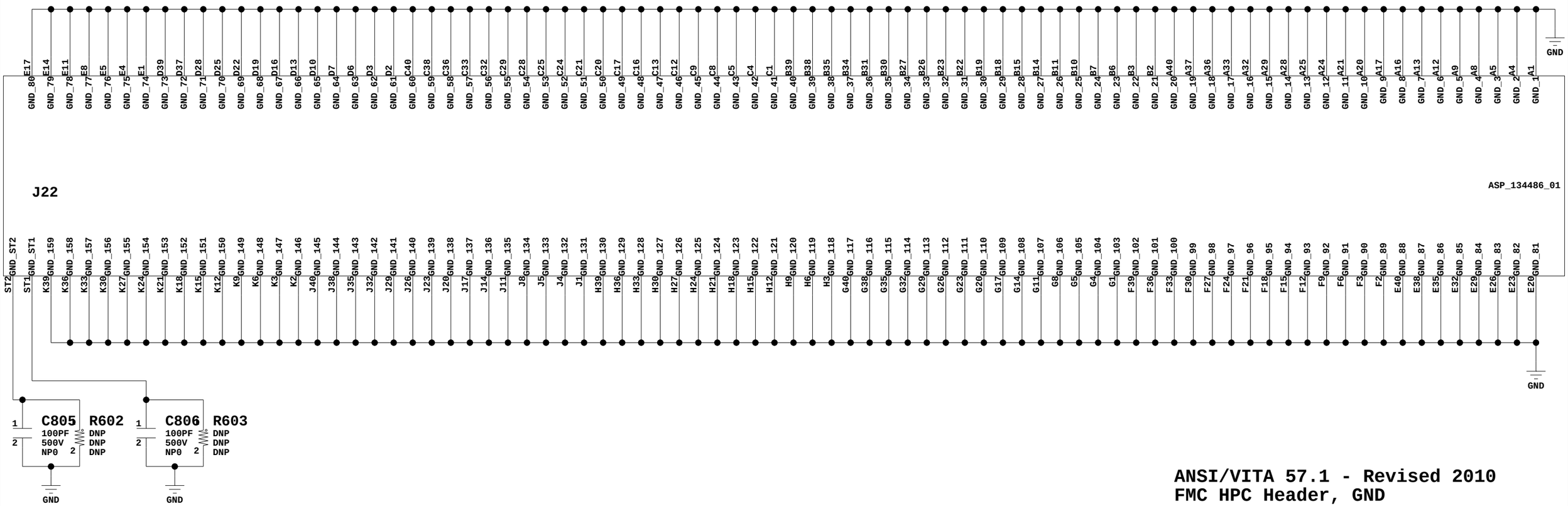

ANSI/VITA 57.1 - Revised 2010
FMC HPC Header, GND

XILINX

Title:	FMC HPC Header, GND SCHEM, ROHS COMPLIANT KC705 EVALUATION PLATFORM	ASSY P/N: PCB P/N: SCH P/N:	0431641 1280565 0381397
Date:	4-2-2012_15:15	Ver:	1.1
Sheet Size: B		Rev:	01
Sheet	19 of 47	Drawn By	BF

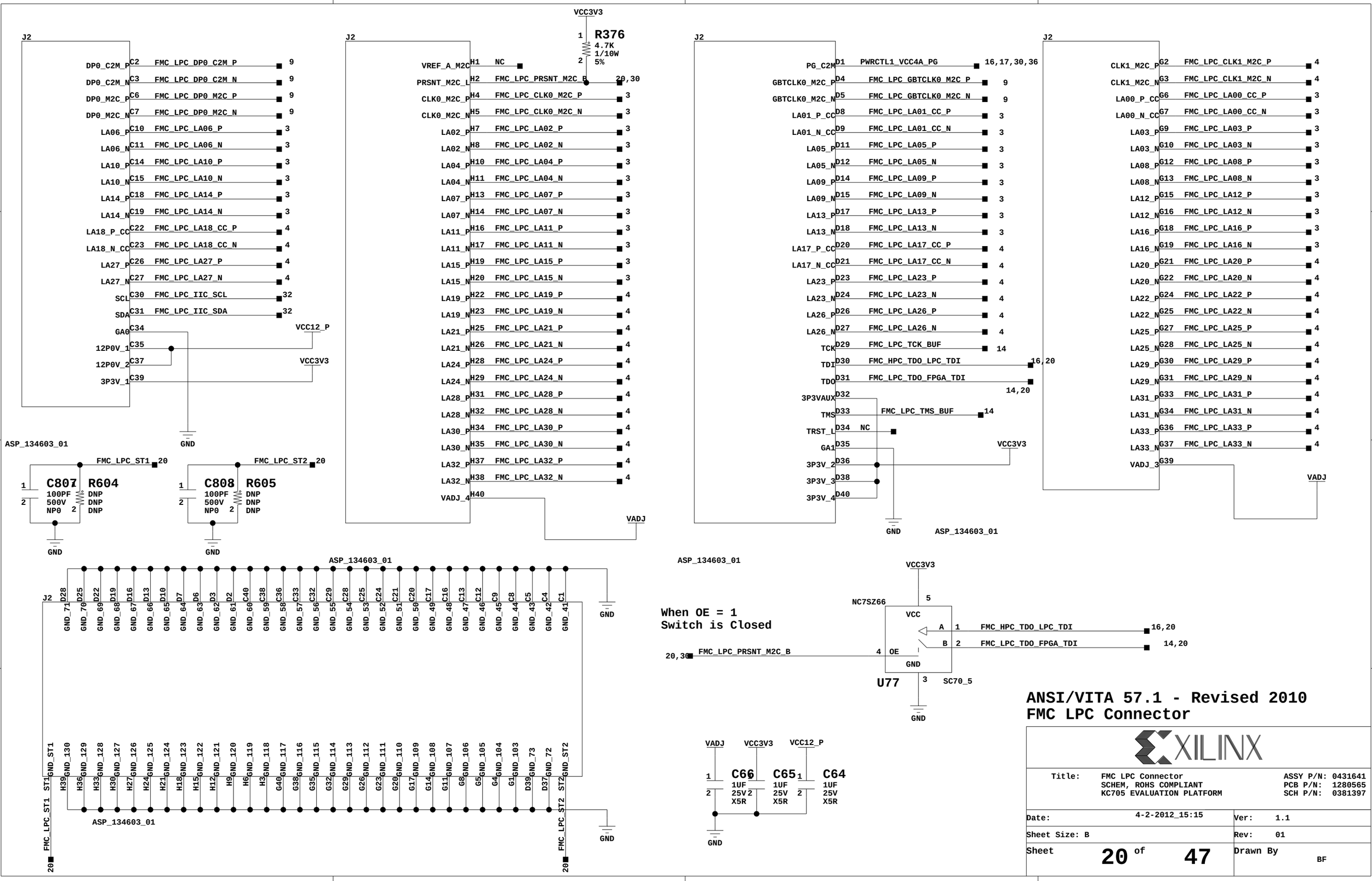
J2
DP0_C2M_P C2 FMC_LPC_DP0_C2M_P 9
DP0_C2M_N C3 FMC_LPC_DP0_C2M_N 9
DP0_M2C_P C6 FMC_LPC_DP0_M2C_P 9
DP0_M2C_N C7 FMC_LPC_DP0_M2C_N 9
LA06_P C10 FMC_LPC_LA06_P 3
LA06_N C11 FMC_LPC_LA06_N 3
LA10_P C14 FMC_LPC_LA10_P 3
LA10_N C15 FMC_LPC_LA10_N 3
LA14_P C18 FMC_LPC_LA14_P 3
LA14_N C19 FMC_LPC_LA14_N 3
LA18_P_CC C22 FMC_LPC_LA18_CC_P 4
LA18_N_CC C23 FMC_LPC_LA18_CC_N 4
LA27_P C26 FMC_LPC_LA27_P 4
LA27_N C27 FMC_LPC_LA27_N 4
SCL C30 FMC_LPC_IIC_SCL 32
SDA C31 FMC_LPC_IIC_SDA 32
GA0 C34
12P0V_1 C35
12P0V_2 C37
3P3V_1 C39
VCC12_P
VCC3V3
GND
ASP_134603_01
FMC_LPC_ST1 20
C807 100PF 500V NP0
R604 DNP DNP DNP
GND
FMC_LPC_ST2 20
C808 100PF 500V NP0
R605 DNP DNP DNP
GND
J2
VREF_A_M2C H1 NC
PRSNT_M2C_L H2 FMC_LPC_PRSNT_M2C_B 20,30
CLK0_M2C_P H4 FMC_LPC_CLK0_M2C_P 3
CLK0_M2C_N H5 FMC_LPC_CLK0_M2C_N 3
LA02_P H7 FMC_LPC_LA02_P 3
LA02_N H8 FMC_LPC_LA02_N 3
LA04_P H10 FMC_LPC_LA04_P 3
LA04_N H11 FMC_LPC_LA04_N 3
LA07_P H13 FMC_LPC_LA07_P 3
LA07_N H14 FMC_LPC_LA07_N 3
LA11_P H16 FMC_LPC_LA11_P 3
LA11_N H17 FMC_LPC_LA11_N 3
LA15_P H19 FMC_LPC_LA15_P 3
LA15_N H20 FMC_LPC_LA15_N 3
LA19_P H22 FMC_LPC_LA19_P 4
LA19_N H23 FMC_LPC_LA19_N 4
LA21_P H25 FMC_LPC_LA21_P 4
LA21_N H26 FMC_LPC_LA21_N 4
LA24_P H28 FMC_LPC_LA24_P 4
LA24_N H29 FMC_LPC_LA24_N 4
LA28_P H31 FMC_LPC_LA28_P 4
LA28_N H32 FMC_LPC_LA28_N 4
LA30_P H34 FMC_LPC_LA30_P 4
LA30_N H35 FMC_LPC_LA30_N 4
LA32_P H37 FMC_LPC_LA32_P 4
LA32_N H38 FMC_LPC_LA32_N 4
VADJ_4 H40
VADJ
VCC3V3
1 R376 2
4.7K 1/10W 5%
J2
PG_C2M D1 PWRCTL1_VCC4A_PG 16,17,30,36
GBTCLK0_M2C_P D4 FMC_LPC_GBTCLK0_M2C_P 9
GBTCLK0_M2C_N D5 FMC_LPC_GBTCLK0_M2C_N 9
LA01_P_CC D8 FMC_LPC_LA01_CC_P 3
LA01_N_CC D9 FMC_LPC_LA01_CC_N 3
LA05_P D11 FMC_LPC_LA05_P 3
LA05_N D12 FMC_LPC_LA05_N 3
LA09_P D14 FMC_LPC_LA09_P 3
LA09_N D15 FMC_LPC_LA09_N 3
LA13_P D17 FMC_LPC_LA13_P 3
LA13_N D18 FMC_LPC_LA13_N 3
LA17_P_CC D20 FMC_LPC_LA17_CC_P 4
LA17_N_CC D21 FMC_LPC_LA17_CC_N 4
LA23_P D23 FMC_LPC_LA23_P 4
LA23_N D24 FMC_LPC_LA23_N 4
LA26_P D26 FMC_LPC_LA26_P 4
LA26_N D27 FMC_LPC_LA26_N 4
TCK D29 FMC_LPC_TCK_BUF 14
TDI D30 FMC_HPC_TDO_LPC_TDI 16,20
TDO D31 FMC_LPC_TDO_FPGA_TDI 14,20
3P3VAUX D32
TMS D33 FMC_LPC_TMS_BUF 14
TRST_L D34 NC
GA1 D35
3P3V_2 D36
3P3V_3 D38
3P3V_4 D40
VCC3V3
GND
ASP_134603_01
J2
CLK1_M2C_P G2 FMC_LPC_CLK1_M2C_P 4
CLK1_M2C_N G3 FMC_LPC_CLK1_M2C_N 4
LA00_P_CC G6 FMC_LPC_LA00_CC_P 3
LA00_N_CC G7 FMC_LPC_LA00_CC_N 3
LA03_P G9 FMC_LPC_LA03_P 3
LA03_N G10 FMC_LPC_LA03_N 3
LA08_P G12 FMC_LPC_LA08_P 3
LA08_N G13 FMC_LPC_LA08_N 3
LA12_P G15 FMC_LPC_LA12_P 3
LA12_N G16 FMC_LPC_LA12_N 3
LA16_P G18 FMC_LPC_LA16_P 3
LA16_N G19 FMC_LPC_LA16_N 3
LA20_P G21 FMC_LPC_LA20_P 4
LA20_N G22 FMC_LPC_LA20_N 4
LA22_P G24 FMC_LPC_LA22_P 4
LA22_N G25 FMC_LPC_LA22_N 4
LA25_P G27 FMC_LPC_LA25_P 4
LA25_N G28 FMC_LPC_LA25_N 4
LA29_P G30 FMC_LPC_LA29_P 4
LA29_N G31 FMC_LPC_LA29_N 4
LA31_P G33 FMC_LPC_LA31_P 4
LA31_N G34 FMC_LPC_LA31_N 4
LA33_P G36 FMC_LPC_LA33_P 4
LA33_N G37 FMC_LPC_LA33_N 4
VADJ_3 G39
VADJ
ASP_134603_01
J2
D28 D25 D22 D19 D16 D13 D10 D7 D6 D3 D2 C40 C38 C36 C33 C32 C29 C28 C25 C24 C21 C20 C17 C16 C13 C12 C9 C8 C5 C4 C1
GND_71 GND_70 GND_69 GND_68 GND_67 GND_66 GND_65 GND_64 GND_63 GND_62 GND_61 GND_60 GND_59 GND_58 GND_57 GND_56 GND_55 GND_54 GND_53 GND_52 GND_51 GND_50 GND_49 GND_48 GND_47 GND_46 GND_45 GND_44 GND_43 GND_42 GND_41
GND
GND_ST1 GND_130 GND_129 GND_128 GND_127 GND_126 GND_125 GND_124 GND_123 GND_122 GND_121 GND_120 GND_119 GND_118 GND_117 GND_116 GND_115 GND_114 GND_113 GND_112 GND_111 GND_110 GND_109 GND_108 GND_107 GND_106 GND_105 GND_104 GND_103 GND_73 GND_72 GND_ST2
H39 H36 H33 H30 H27 H24 H21 H18 H15 H12 H9 H6 H3 G40 G38 G35 G32 G29 G26 G23 G20 G17 G14 G11 G8 G5 G4 G1 D39 D37
FMC_LPC_ST1 20
FMC_LPC_ST2 20
ASP_134603_01
When OE = 1
Switch is Closed
20,30 FMC_LPC_PRSNT_M2C_B
NC7SZ66
VCC3V3
5 VCC
A 1 FMC_HPC_TDO_LPC_TDI 16,20
B 2 FMC_LPC_TDO_FPGA_TDI 14,20
4 OE
GND
3 SC70_5
U77
GND
VADJ VCC3V3 VCC12_P
C66 1UF 25V X5R
C65 1UF 25V X5R
C64 1UF 25V X5R
GND
ANSI/VITA 57.1 - Revised 2010
FMC LPC Connector
XILINX
Title: FMC LPC Connector
SCHEM, ROHS COMPLIANT
KC705 EVALUATION PLATFORM
ASSY P/N: 0431641
PCB P/N: 1280565
SCH P/N: 0381397
Date: 4-2-2012_15:15
Ver: 1.1
Sheet Size: B
Rev: 01
Sheet 20 of 47
Drawn By BF

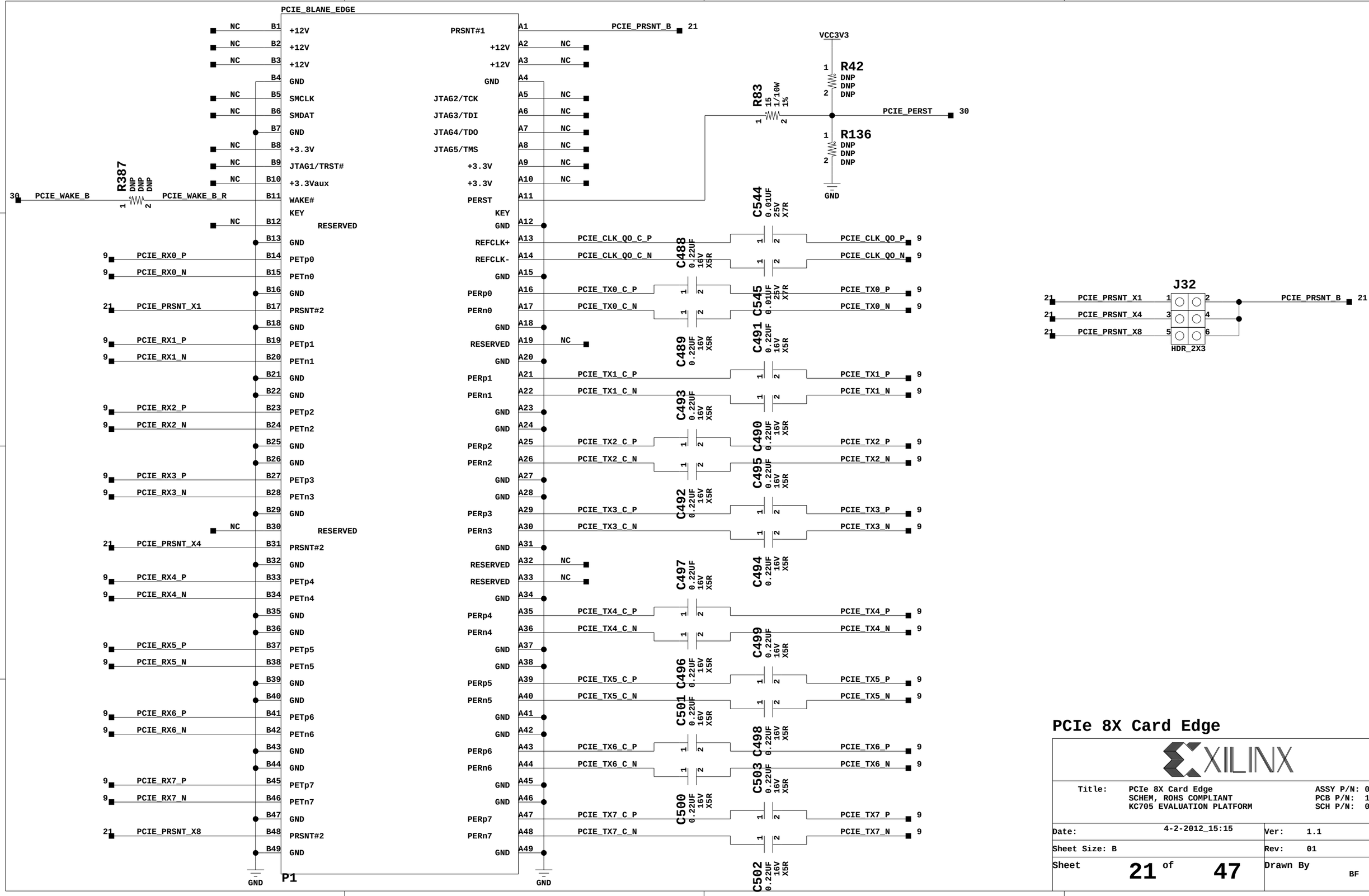

PCIe 8X Card Edge

XILINX

Title:	PCIe 8X Card Edge SCHEM, ROHS COMPLIANT KC705 EVALUATION PLATFORM	ASSY P/N:	0431641
		PCB P/N:	1280565
		SCH P/N:	0381397
Date:	4-2-2012_15:15	Ver:	1.1
Sheet Size: B		Rev:	01
Sheet	21 of 47	Drawn By	BF

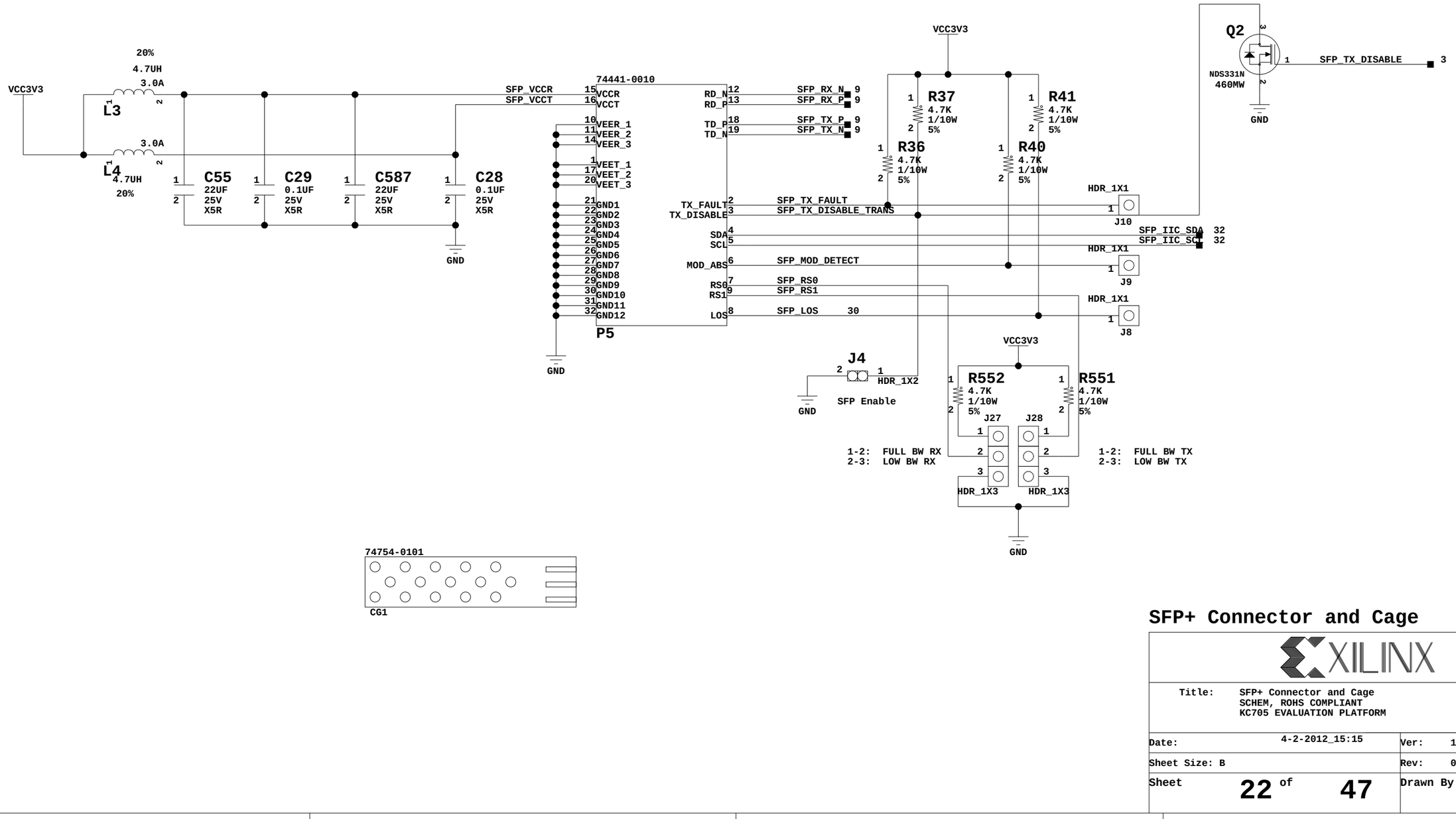

SFP+ Connector and Cage

Title:	SFP+ Connector and Cage SCHEM, ROHS COMPLIANT KC705 EVALUATION PLATFORM	ASSY P/N: PCB P/N: SCH P/N:	0431641 1280565 0381397
Date:	4-2-2012_15:15	Ver:	1.1
Sheet Size: B		Rev:	01
Sheet	22 of 47	Drawn By	BF

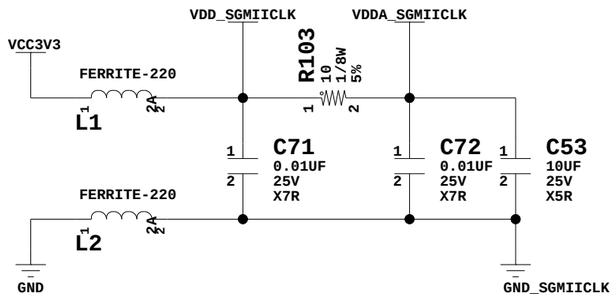

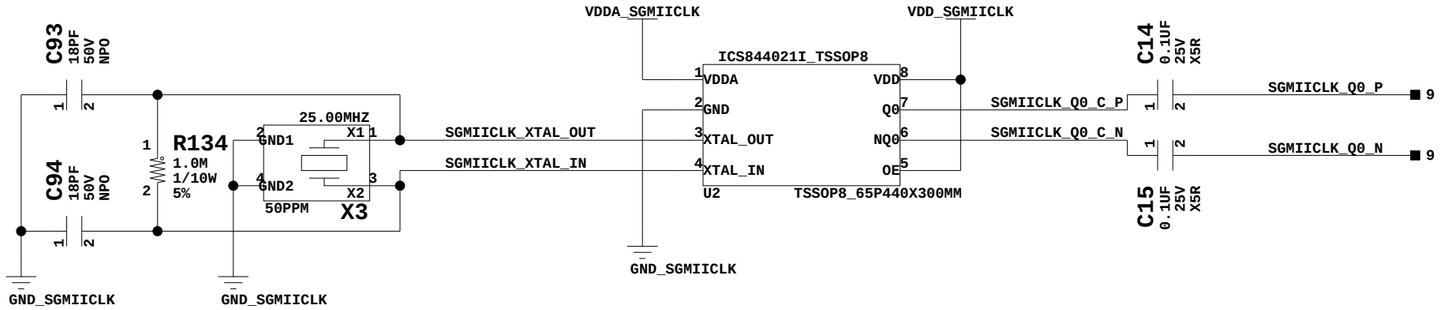

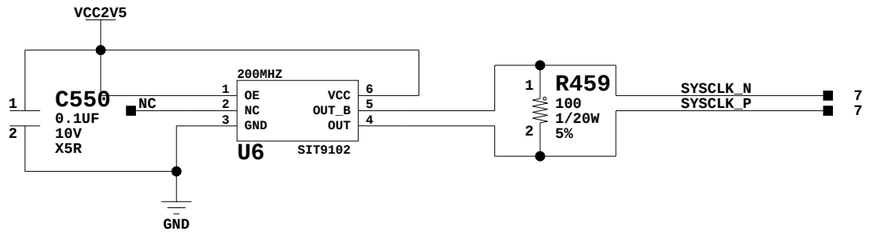

SIT9102AI-243N25E200.0000

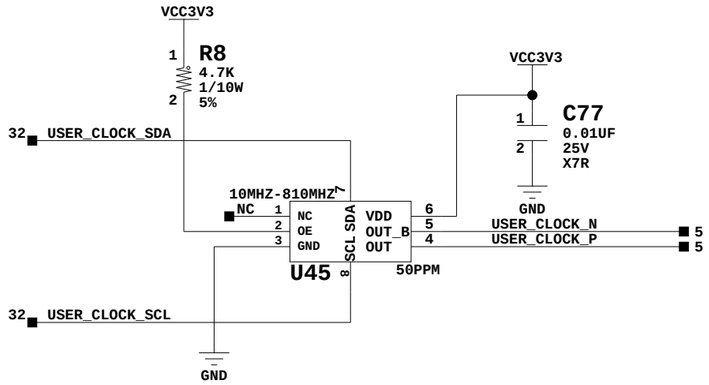

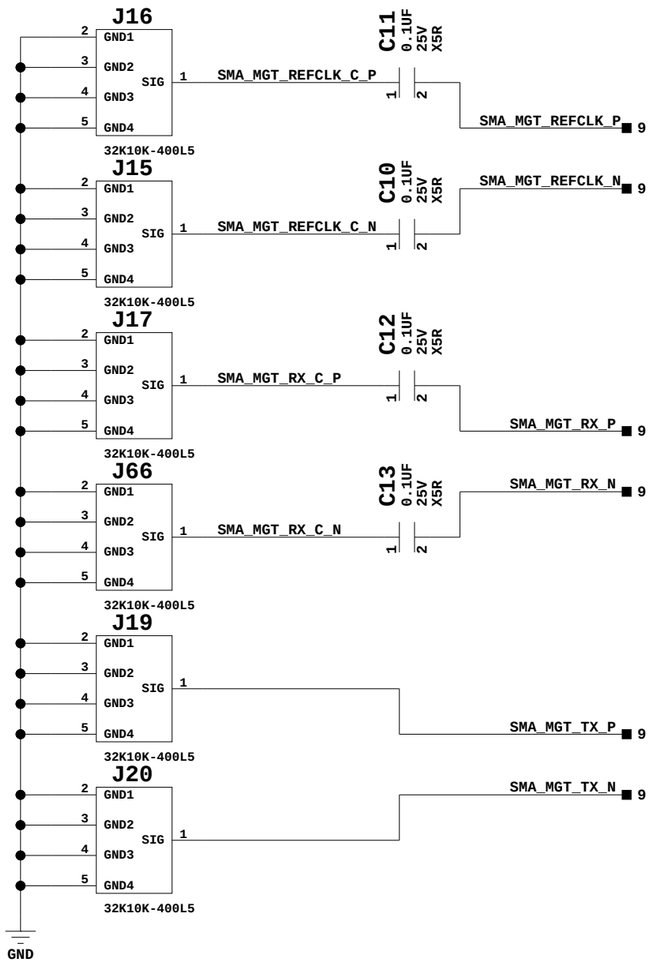

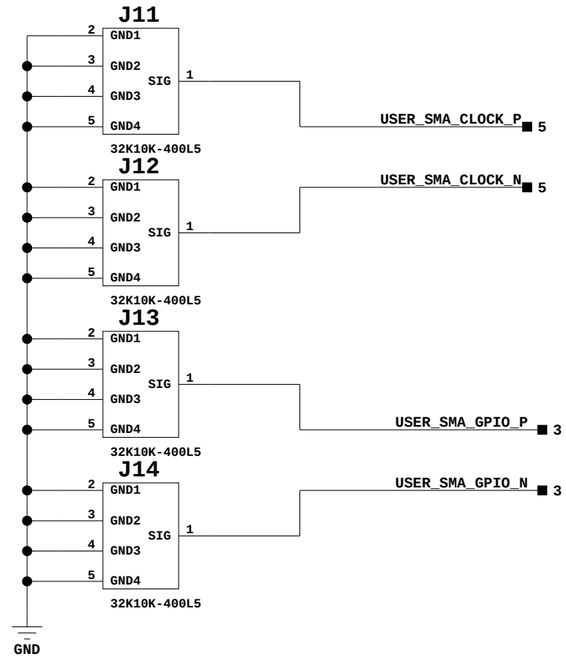

Clocks and SMA Connectors

Title:	Clocks and SMA Connectors SCHEM, ROHS COMPLIANT KC705 EVALUATION PLATFORM	ASSY P/N: 0431641 PCB P/N: 1280565 SCH P/N: 0381397
Date: 4-2-2012_15:15		Ver: 1.1
Sheet Size: B		Rev: 01
Sheet 23 of 47		Drawn By BF

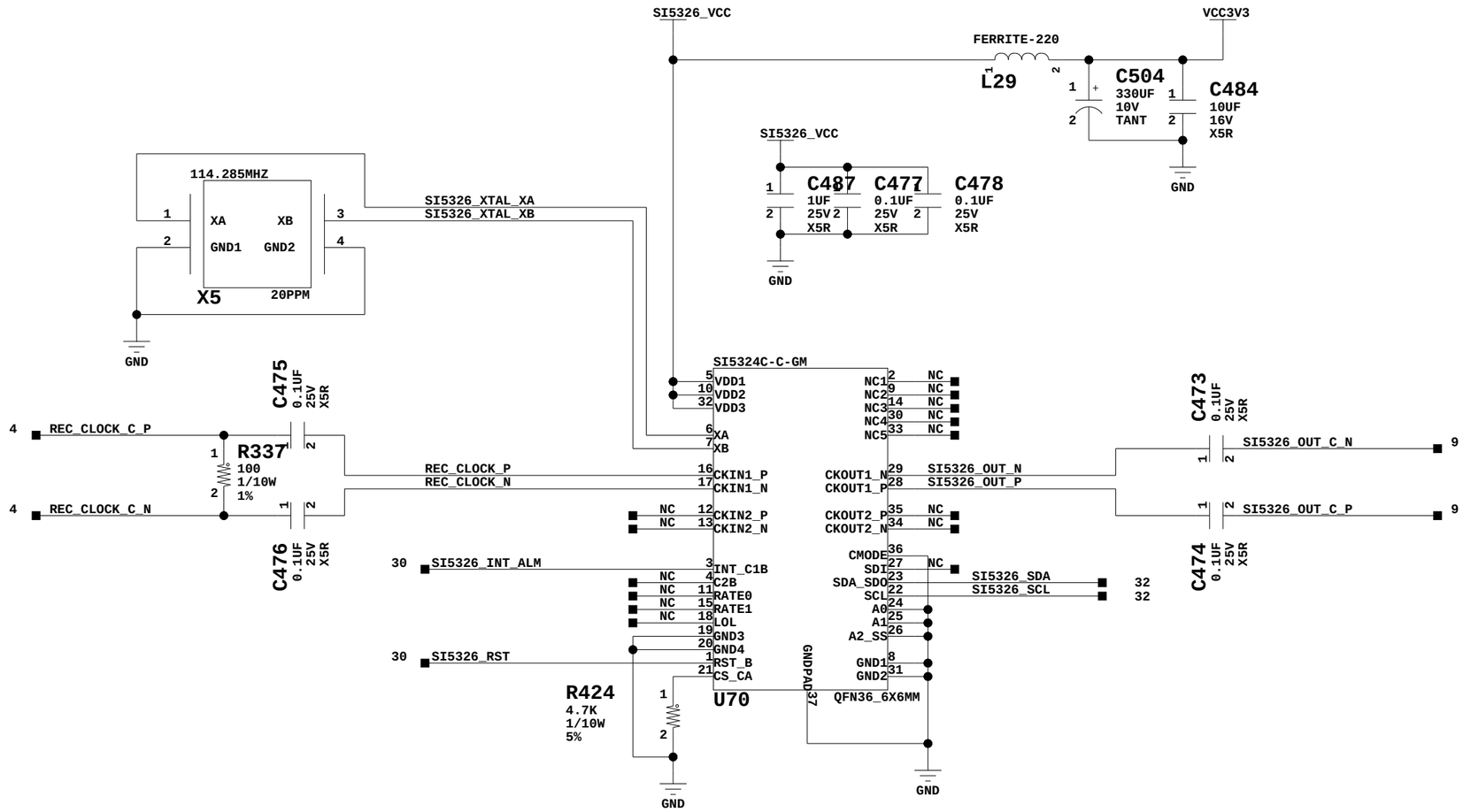

5326 Clock Recovery

Title:	5326 Clock Recovery SCHEM, ROHS COMPLIANT KC705 EVALUATION PLATFORM	ASSY P/N:	0431641
		PCB P/N:	1280565
		SCH P/N:	0381397
Date:	4-2-2012_15:15	Ver:	1.1
Sheet Size: B		Rev:	01
Sheet	24 of 47	Drawn By	BF

The PHY MDIP Pins below are
Media Dependent Interface Pins (MDIP),
and are all bidirectional pins.

J29, J30 pins 1-2: GMII/MII to Cu
J29, J30 pins 2-3: SGMII to Cu, no clk
J27 pins 1-2, J64 ON: RGMII, modified MII in Cu

Pin to Constant Mapping	
Pin	Bit [2:0]
VCC2V5	111
LED_LINK10	110
LED_LINK100	101
LED_LINK1000	100
LED_DUPLEX	011
LED_RX	010
LED_TX	001
GND	000

Pin	Bit[2]	Bit[1]	Bit[0]		
CFG0	PHYADR[2]	PHYADR[1]	PHYADR[0]	111	PHYAddr "00111". Don't advertise the PAUSE bit
CFG1	ENA_PAUSE	PHYADR[4]	PHYADR[3]	000	
CFG2	ANEG[3]	ANEG[2]	ANEG[1]	111	Auto-Neg en, advertise all caps; prefer slave. Auto crossover enabled.
CFG3	ANEG[0]	ENA_XC	DIS_125	111	125 CLK option disabled.
CFG4	HWCFG_MD[2]	HWCFG_MD[1]	HWCFG_MD[0]	111	GMII to Cu mode. Fiber/copper auto-detect diasabled.
CFG5	DIS_FC	DIS_SLEEP	HWCFG_MD[3]	111	Sleep mode disabled.
CFG6	SEL_BDT	INT_POL	75/50 OHM	010	MDC/MDIO selected. Active LOW interrupt 50Ohm SERDES option.

10/100/1000 PHY

XILINX

Title:	10/100/1000 PHY SCHEM, ROHS COMPLIANT KC705 EVALUATION PLATFORM	ASSY P/N:	0431641
		PCB P/N:	1280565
		SCH P/N:	0381397
Date:	4-2-2012_15:15	Ver:	1.1
Sheet Size: B		Rev:	01
Sheet	25 of 47	Drawn By	BF

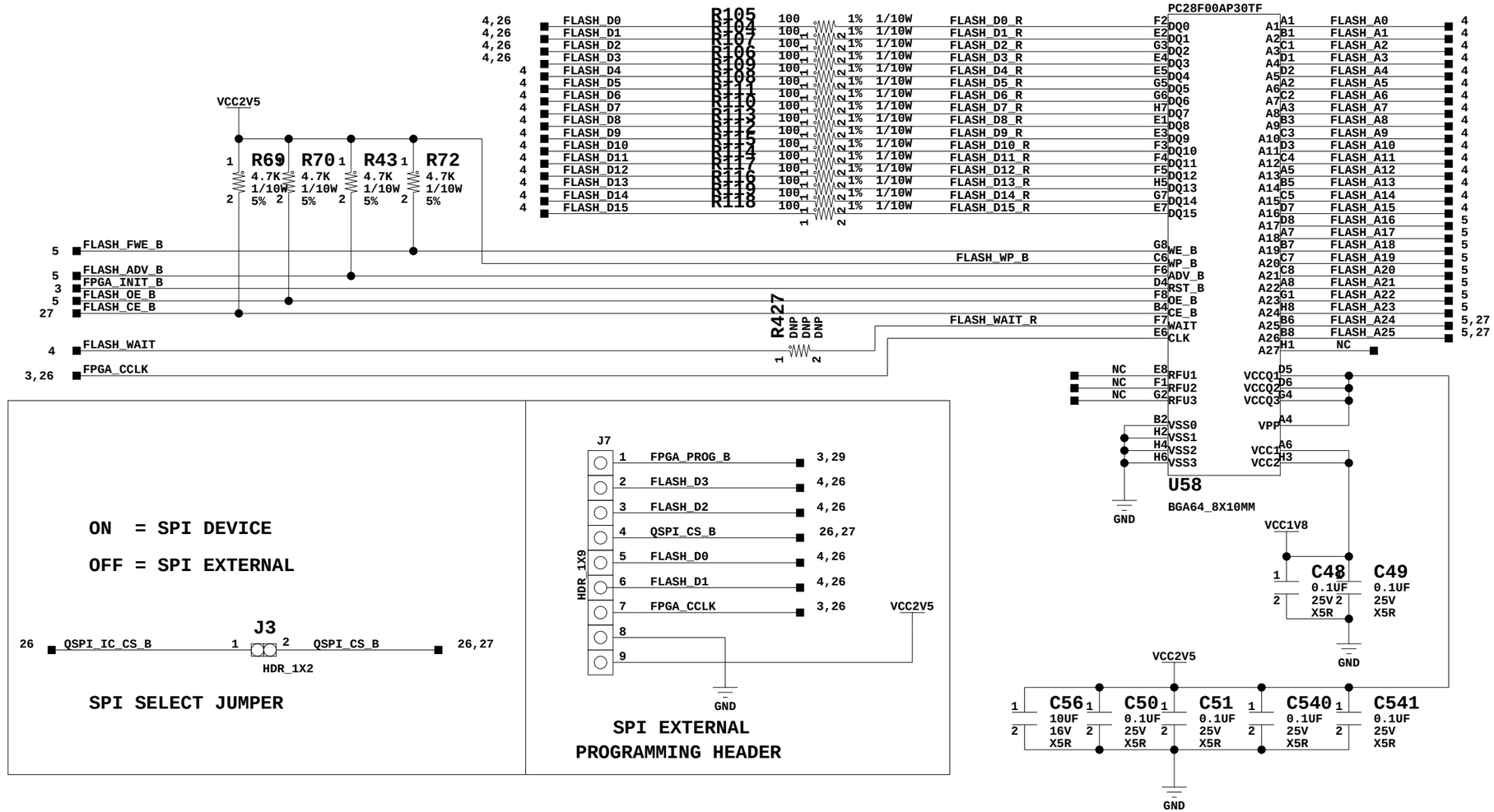

BPI FLASH, QSPI

XILINX

Title:	BPI FLASH, QSPI SCHEM, ROHS COMPLIANT KC705 EVALUATION PLATFORM	ASSY P/N: 0431641 PCB P/N: 1280565 SCH P/N: 0381397	
Date:	4-2-2012_15:15	Ver:	1.1
Sheet Size: B		Rev:	01
Sheet	26 of 47	Drawn By	BF

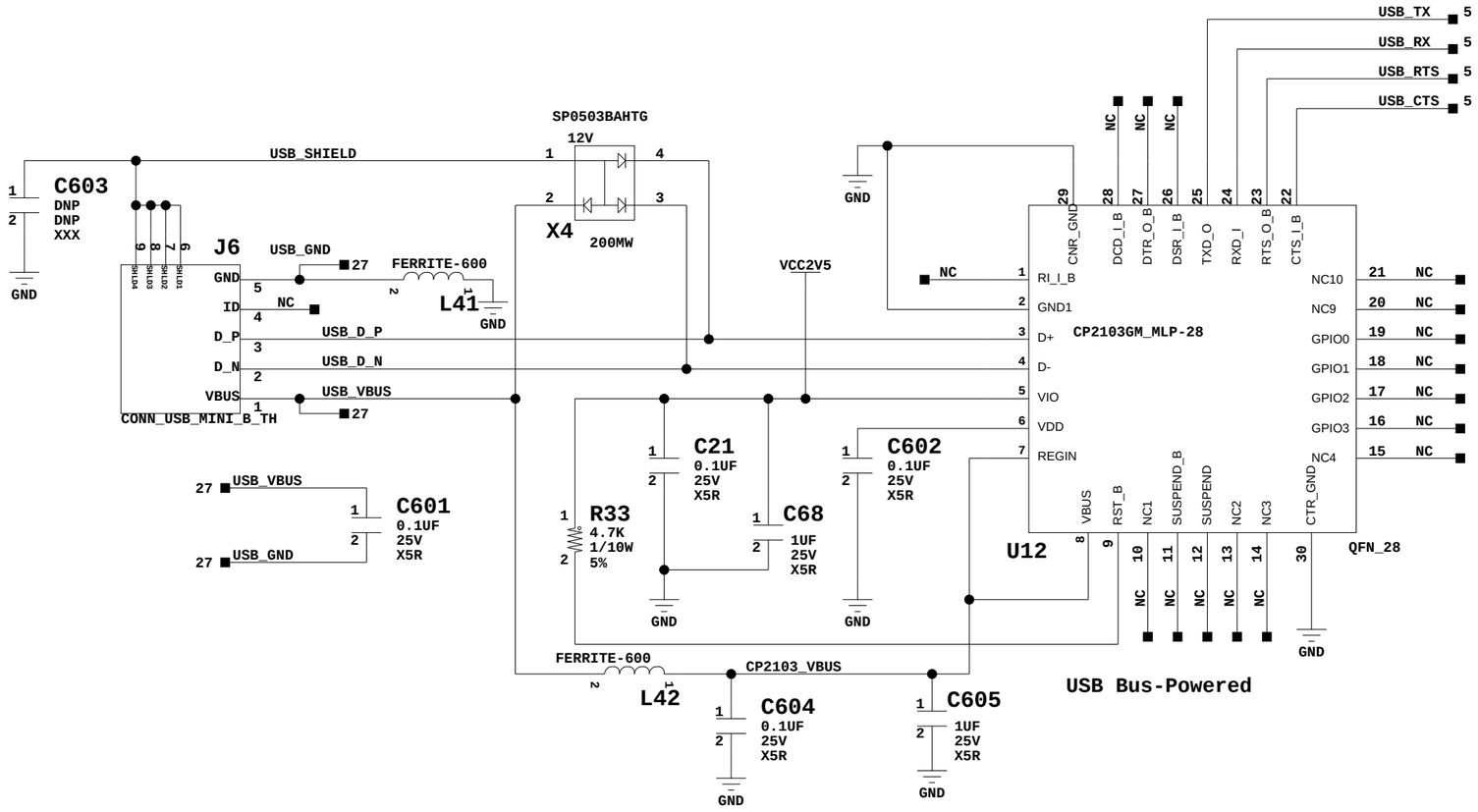

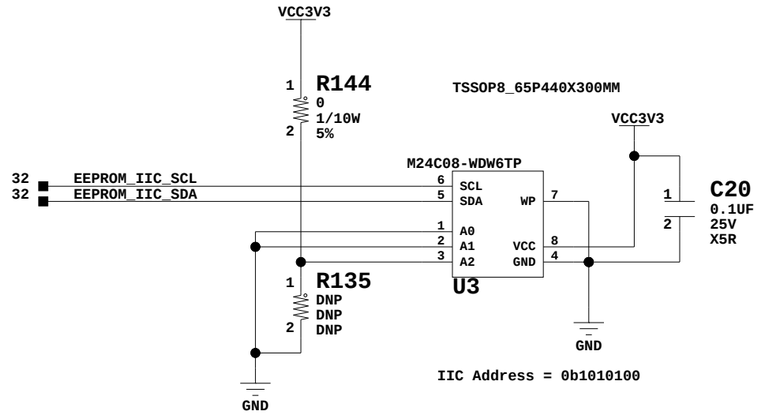

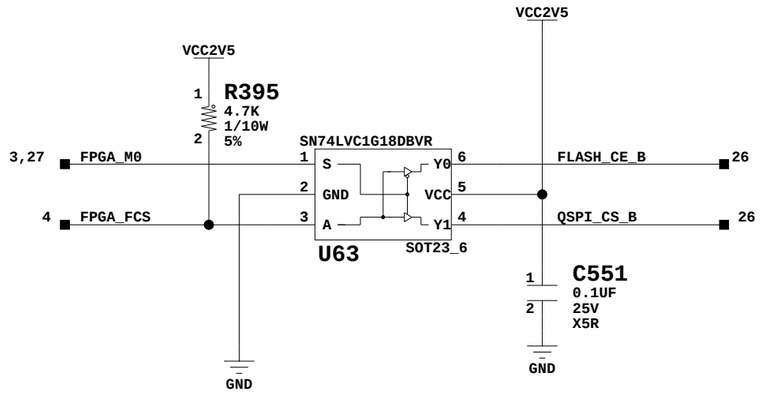

USB UART, EEPROM, Config DIPs

Title:	USB UART, EEPROM, Config DIPs SCHEM, ROHS COMPLIANT KC705 EVALUATION PLATFORM	ASSY P/N: 0431641 PCB P/N: 1280565 SCH P/N: 0381397	
Date:	4-2-2012_15:15	Ver:	1.1
Sheet Size: B		Rev:	01
Sheet	27 of 47	Drawn By	BF

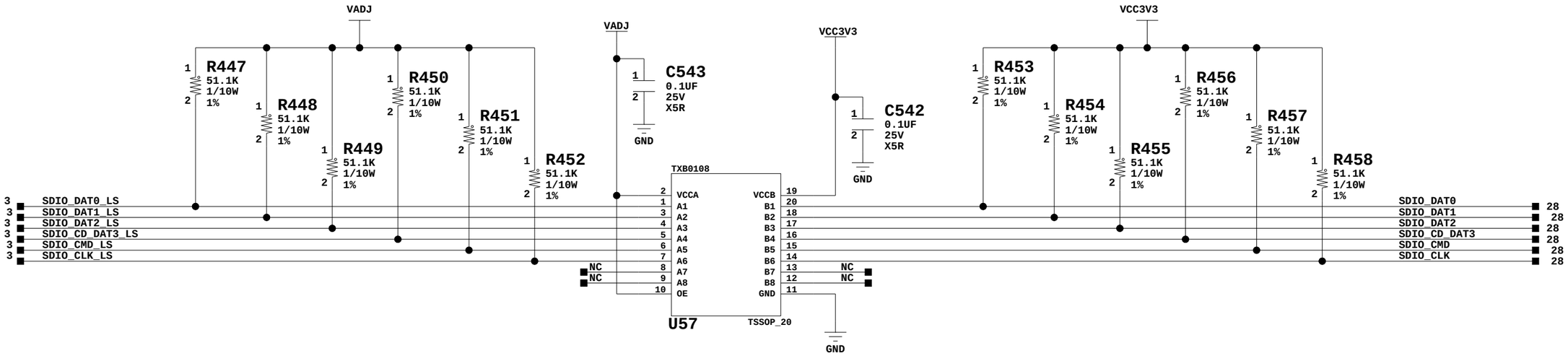

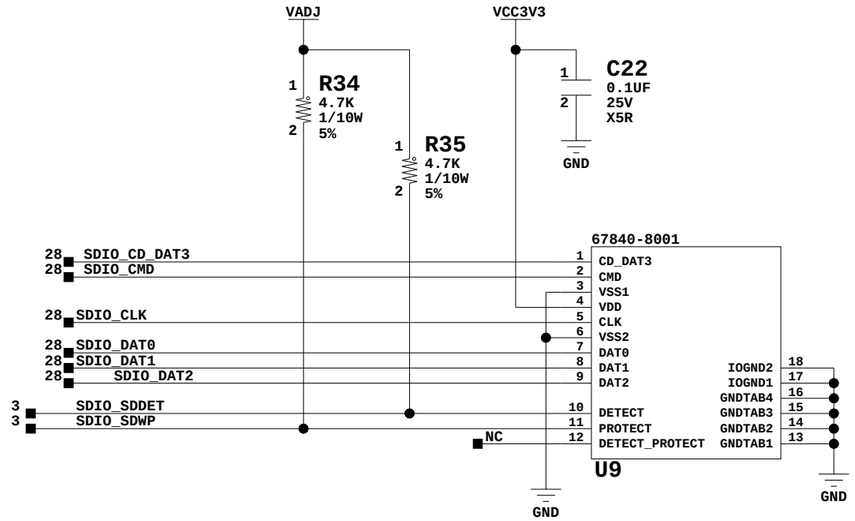

SD Card Connector

XILINX

Title:	SD Card Connector SCHEM, ROHS COMPLIANT KC705 EVALUATION PLATFORM	ASSY P/N: PCB P/N: SCH P/N:	0431641 1280565 0381397
Date:	4-2-2012_15:15	Ver:	1.1
Sheet Size: B		Rev:	01
Sheet	28 of 47	Drawn By	BF

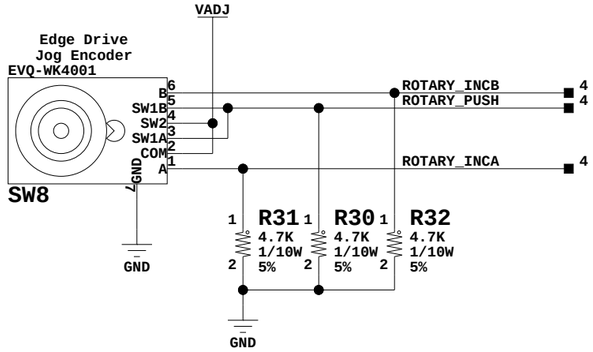

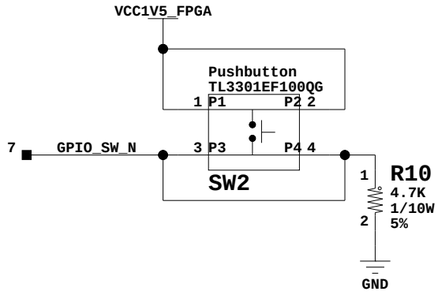

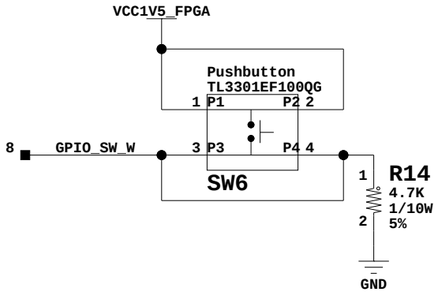

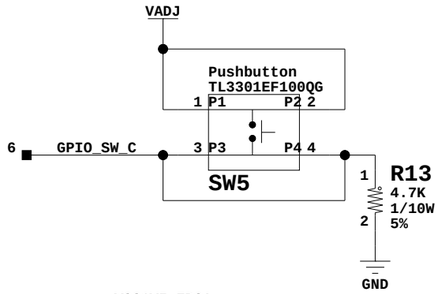

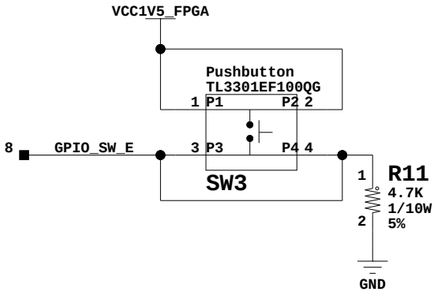

LEDs near top edge

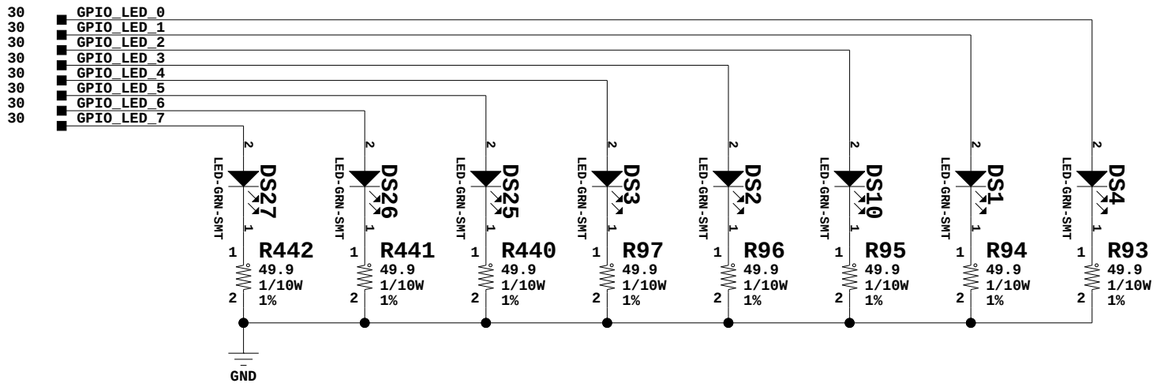

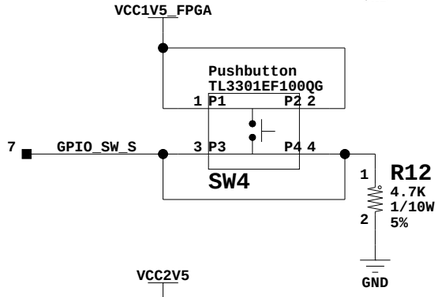

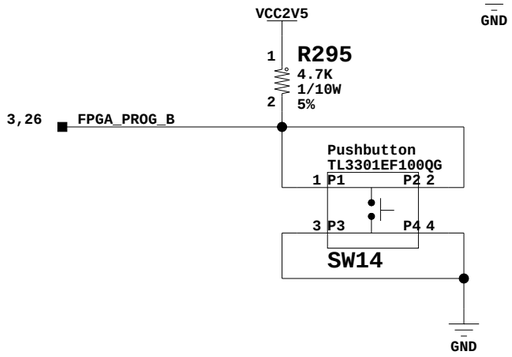

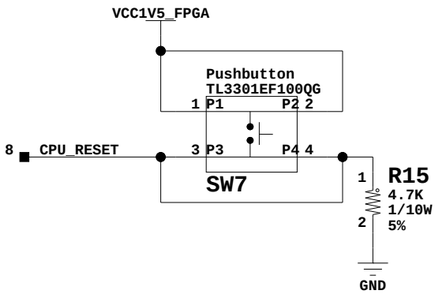

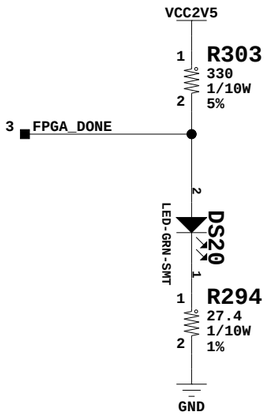

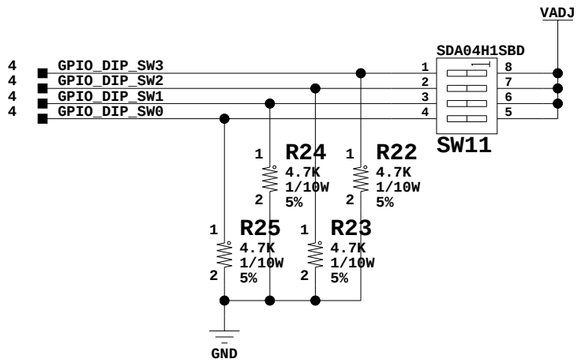

Buttons, Switches, LEDs, Rotary Encode

Title:	Buttons, Switches, LEDs, Rotary Encode SCHEM, ROHS COMPLIANT KC705 EVALUATION PLATFORM	ASSY P/N: PCB P/N: SCH P/N:	0431641 1280565 0381397
Date:	4-2-2012_15:15	Ver:	1.1
Sheet Size: B		Rev:	01
Sheet	29 of 47	Drawn By	BF

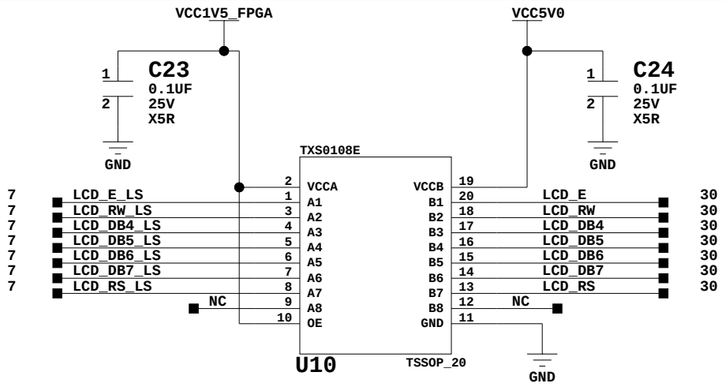

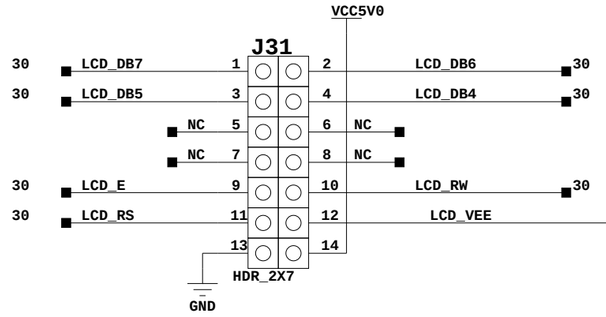

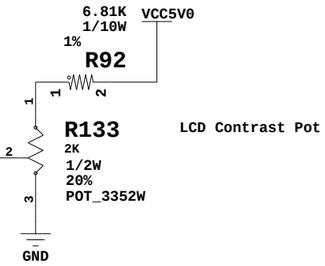

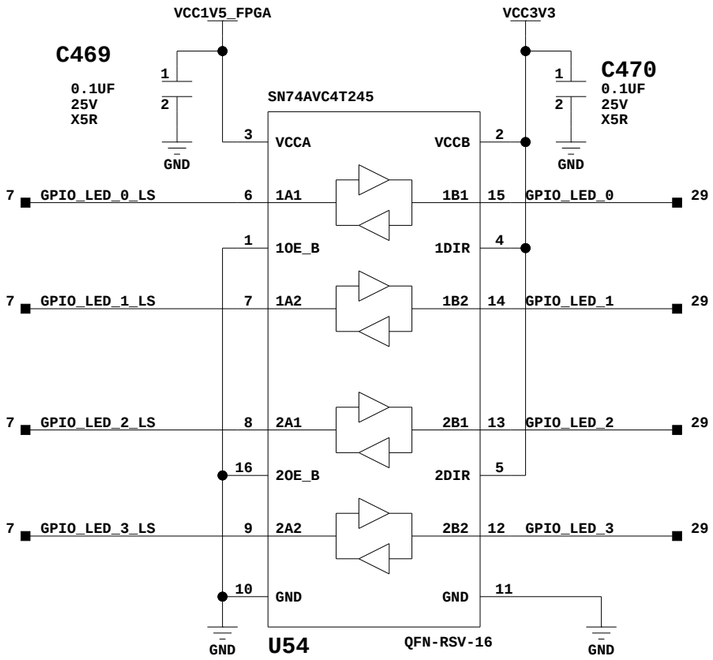

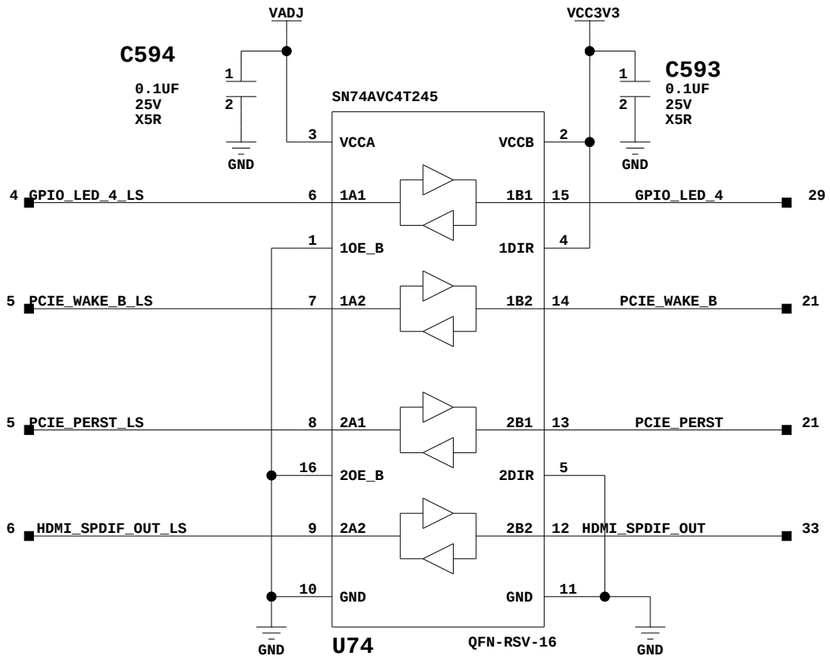

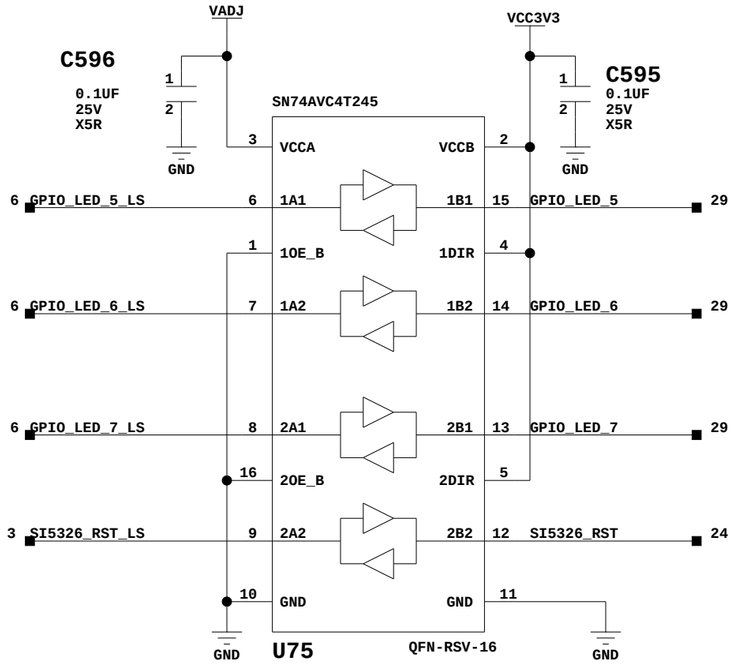

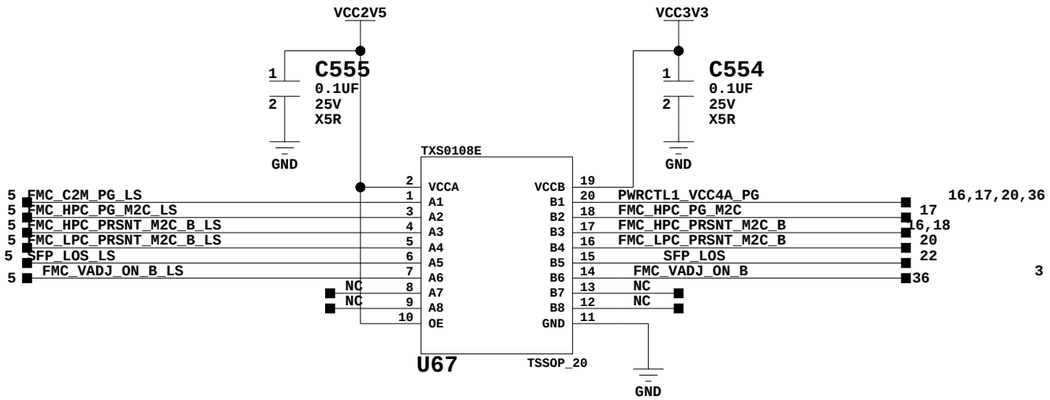

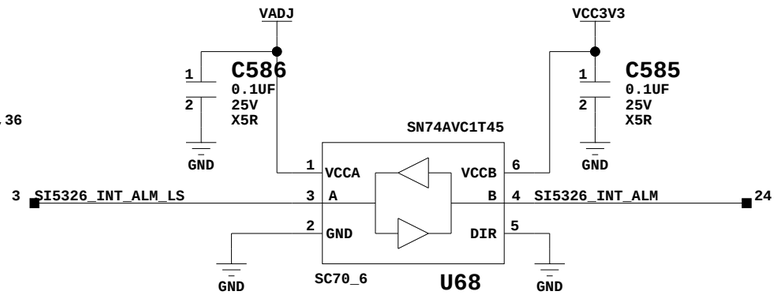

LCD, Level Shifters

XILINX

Title:	LCD, Level Shifters SCHEM, ROHS COMPLIANT KC705 EVALUATION PLATFORM	ASSY P/N: 0431641 PCB P/N: 1280565 SCH P/N: 0381397	
Date:	4-2-2012_15:15	Ver:	1.1
Sheet Size: B		Rev:	01
Sheet	30 of 47	Drawn By	BF

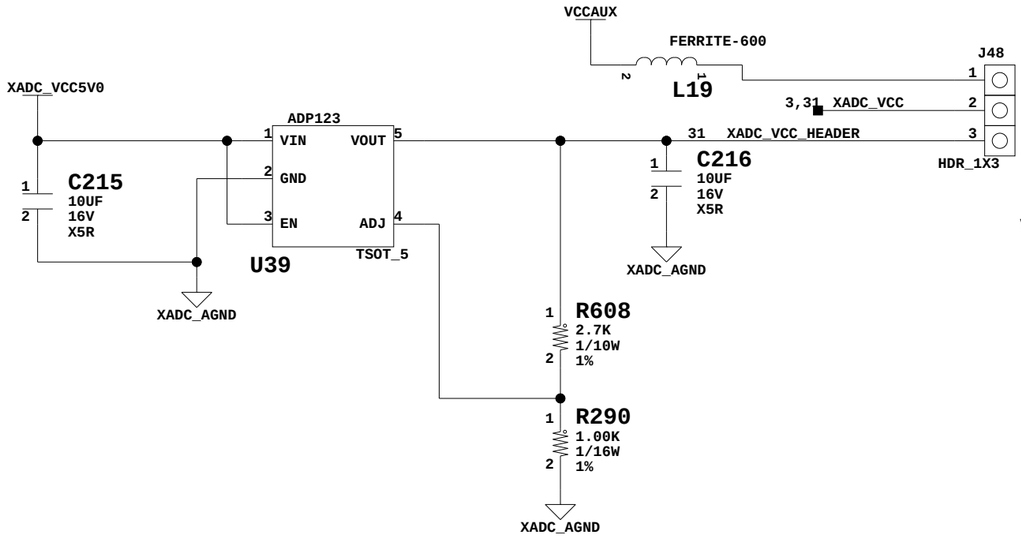

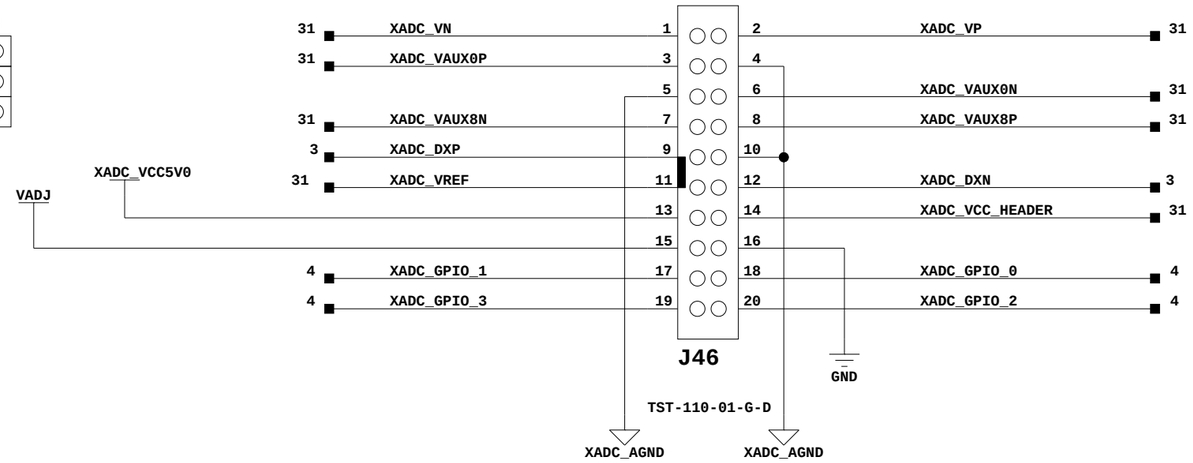

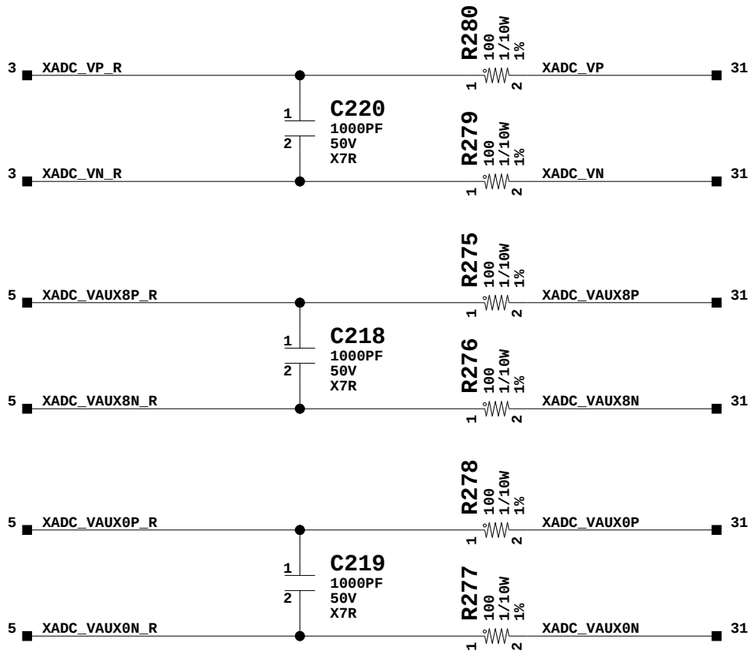

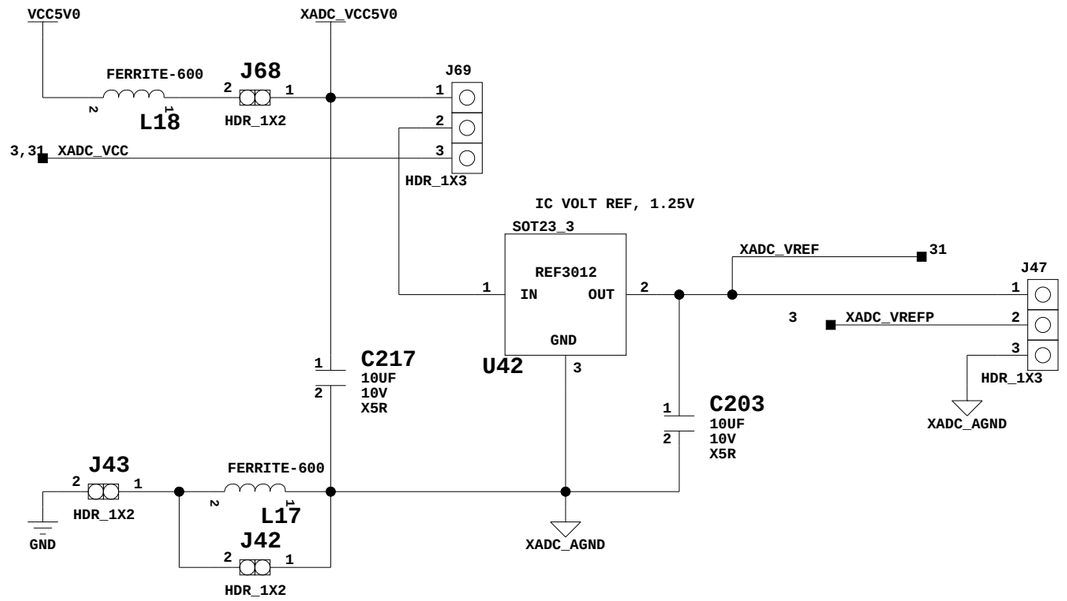

XADC Header and Reference

Title:	XADC Header and Reference SCHEM, ROHS COMPLIANT KC705 EVALUATION PLATFORM	ASSY P/N: 0431641 PCB P/N: 1280565 SCH P/N: 0381397	
Date:	4-2-2012_15:15	Ver:	1.1
Sheet Size: B		Rev:	01
Sheet	31 of 47	Drawn By	BF

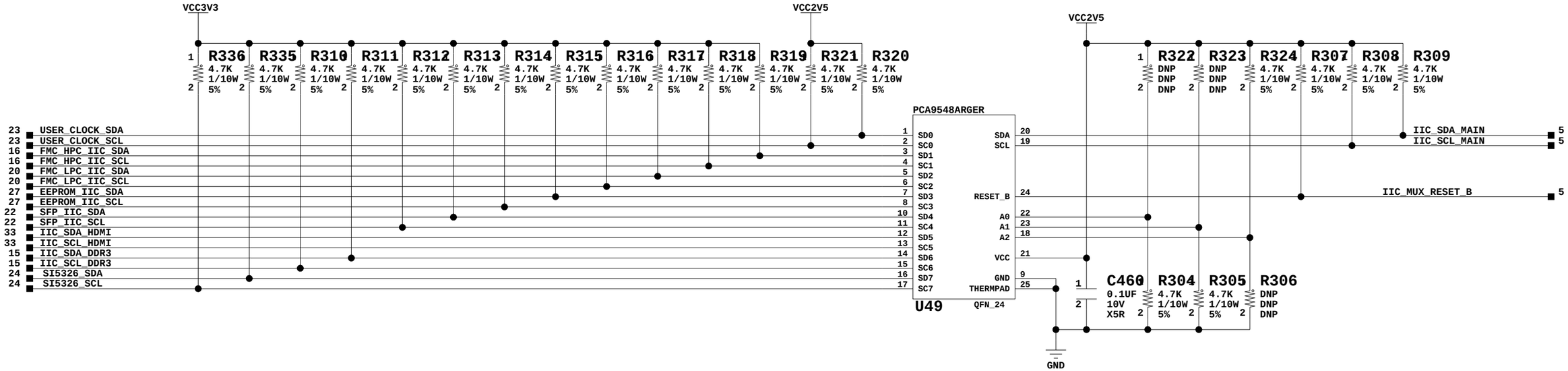

IIC MUX

XILINX

Title:	IIC MUX SCHEM, ROHS COMPLIANT KC705 EVALUATION PLATFORM	ASSY P/N: 0431641 PCB P/N: 1280565 SCH P/N: 0381397	
Date:	4-2-2012_15:15	Ver:	1.1
Sheet Size: B		Rev:	01
Sheet	32 of 47	Drawn By	BF

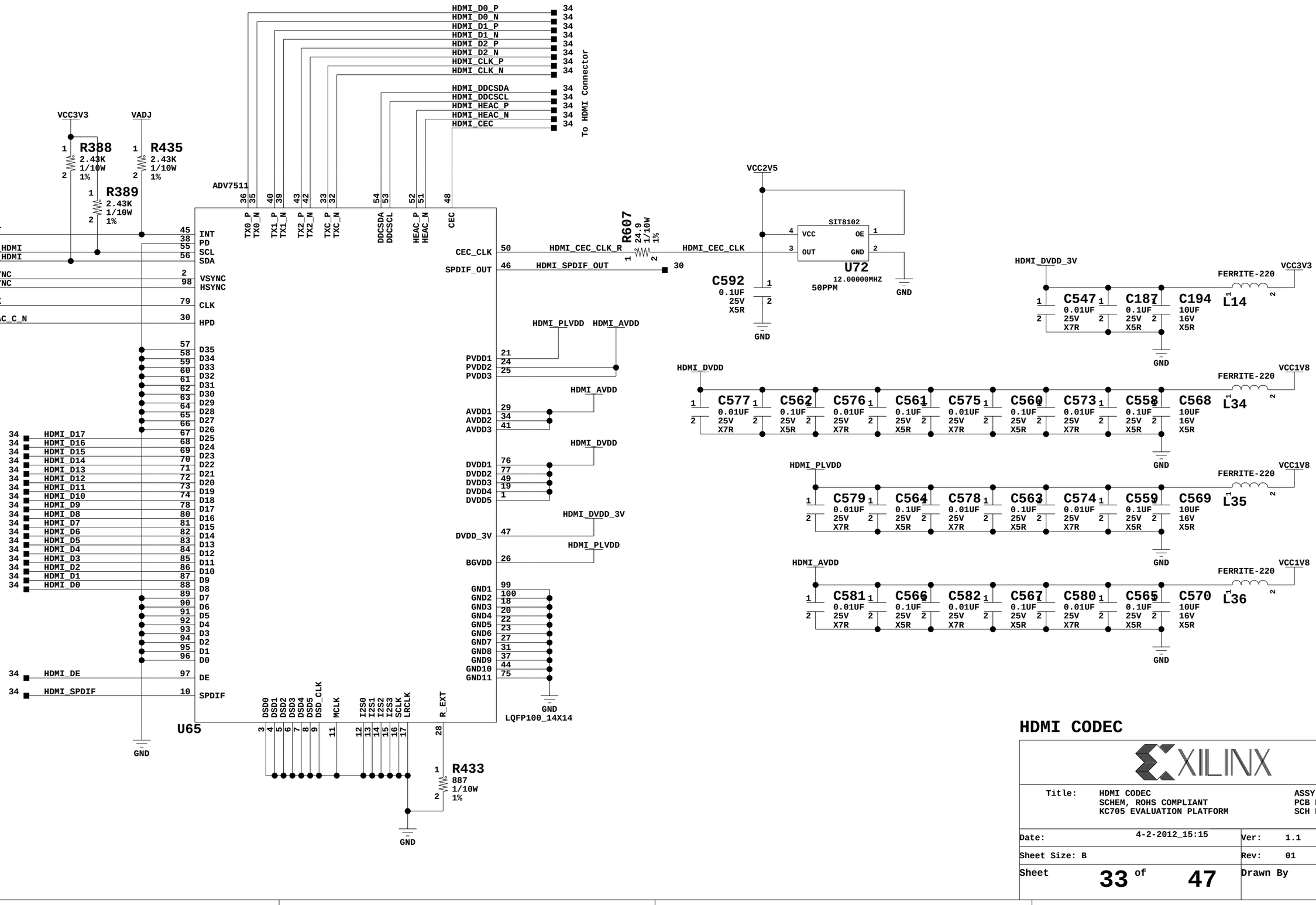

HDMI CODEC

Title:	HDMI CODEC SCHEM, ROHS COMPLIANT KC705 EVALUATION PLATFORM	ASSY P/N:	0431641
		PCB P/N:	1280565
		SCH P/N:	0381397
Date:	4-2-2012_15:15	Ver:	1.1
Sheet Size: B		Rev:	01
Sheet	33 of 47	Drawn By	BF

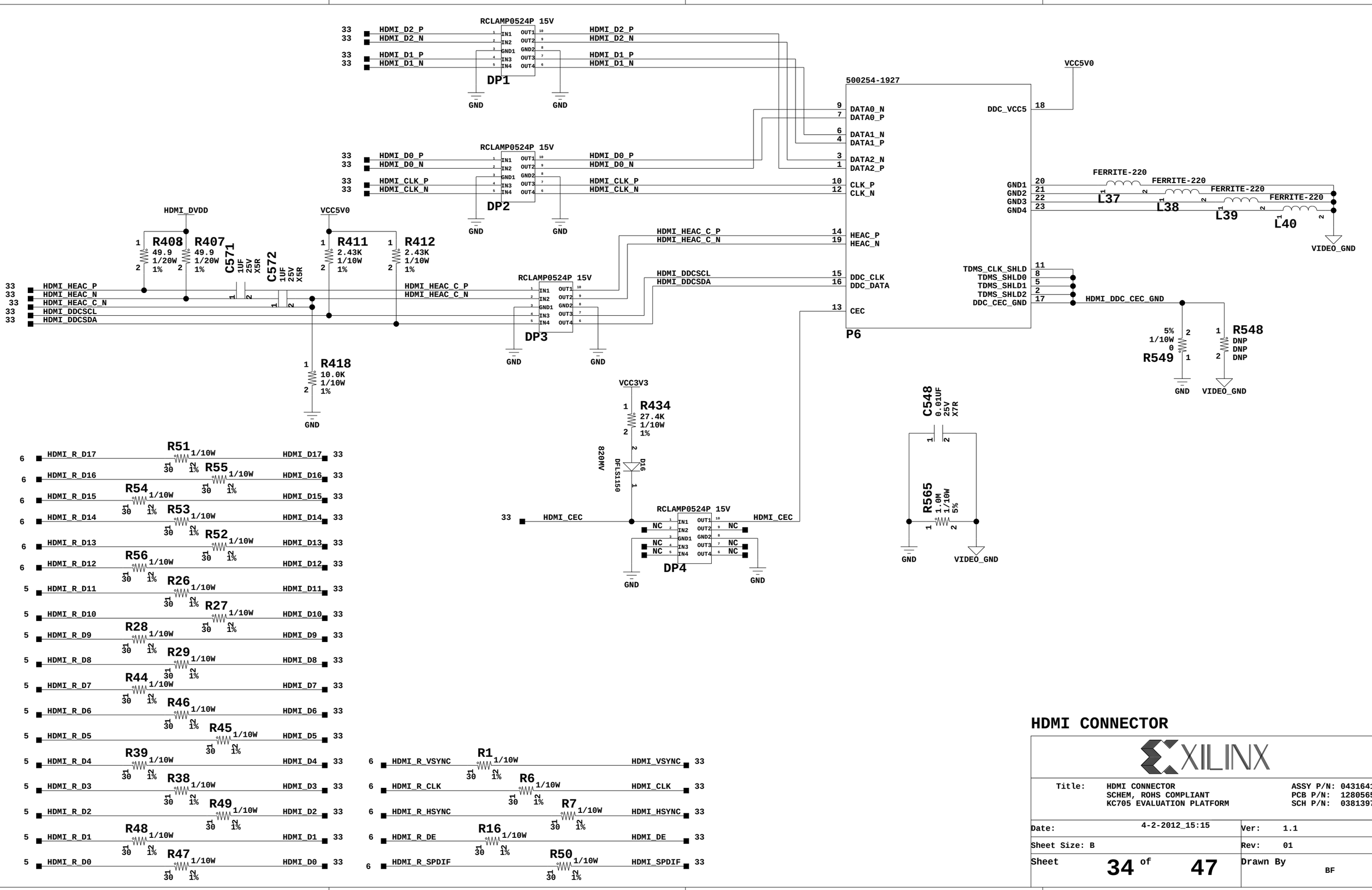

HDMI CONNECTOR

Title:	HDMI CONNECTOR SCHEM, ROHS COMPLIANT KC705 EVALUATION PLATFORM	ASSY P/N: 0431641 PCB P/N: 1280565 SCH P/N: 0381397	
Date:	4-2-2012_15:15	Ver:	1.1
Sheet Size: B		Rev:	01
Sheet	34 of 47	Drawn By	BF

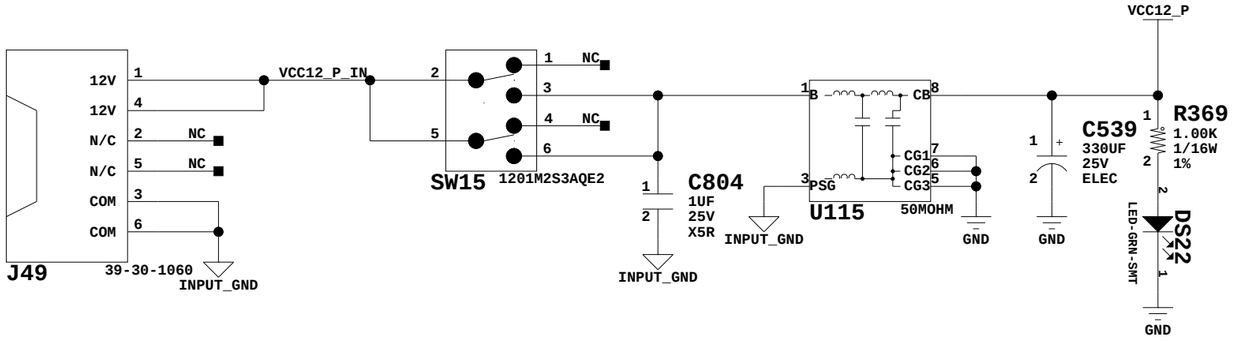

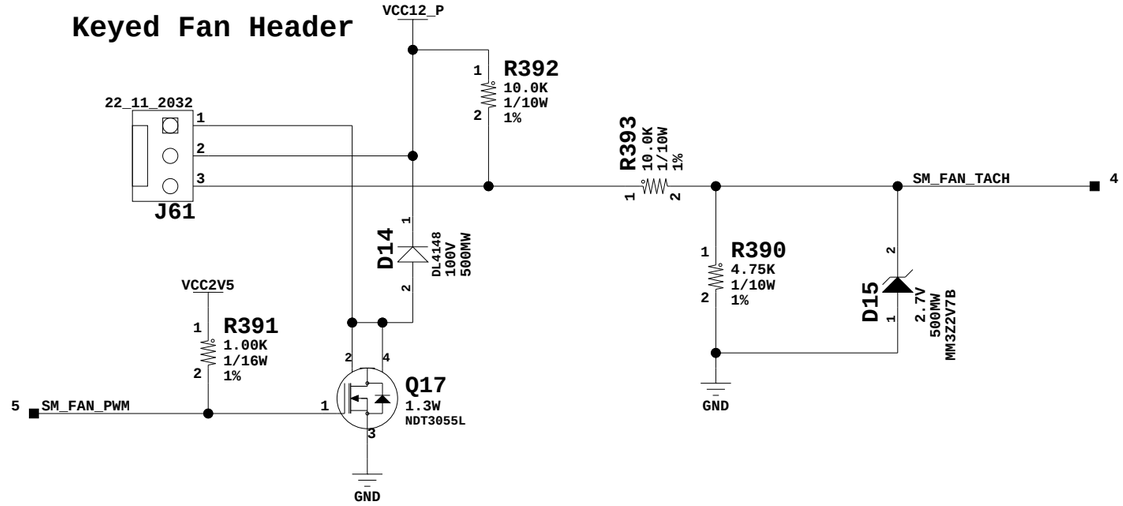

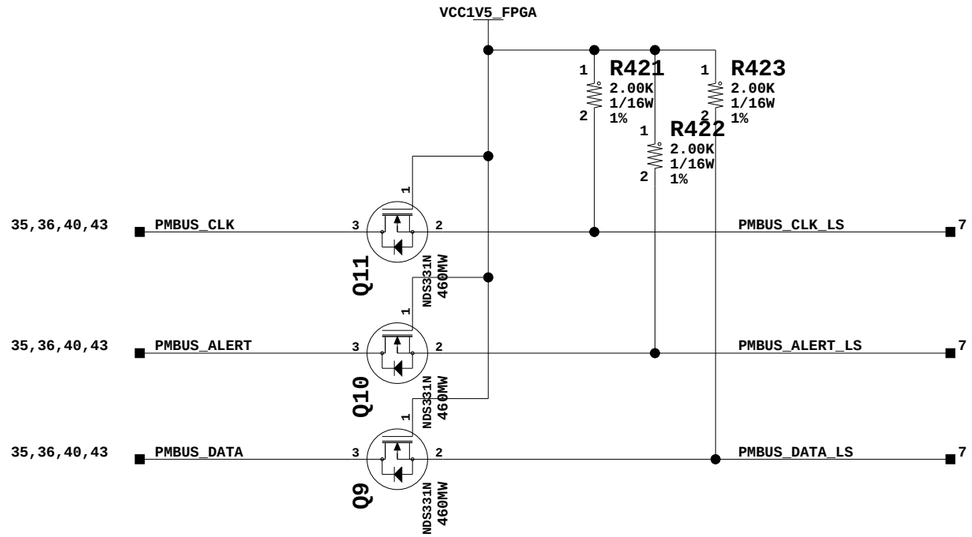

PMBUS Level-Shifter

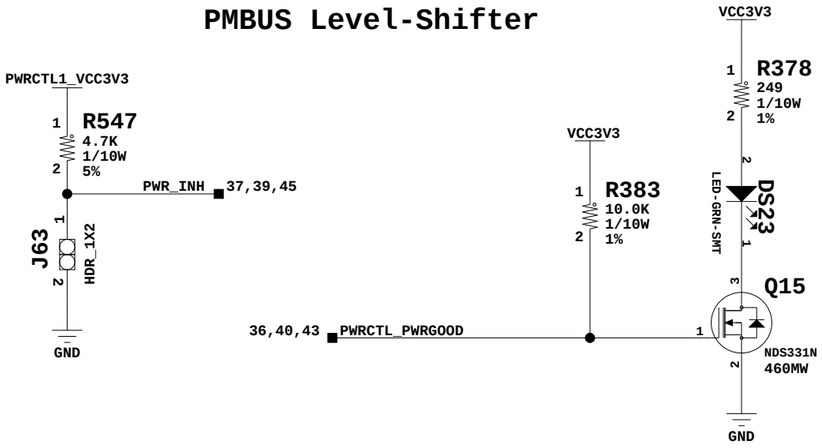

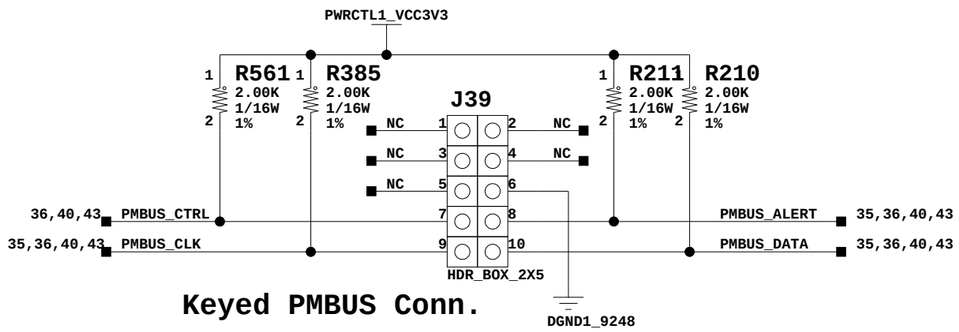

Keyed PMBUS Conn.

Power Connector and switch, PMBus Head

Title:	Power Connector and switch, PMBus Heads SCHEM, ROHS COMPLIANT KC705 EVALUATION PLATFORM	ASSY P/N: PCB P/N: SCH P/N:	0431641 1280565 0381397
Date:	4-2-2012_15:15	Ver:	1.1
Sheet Size: B		Rev:	01
Sheet	35 of 47	Drawn By	BF

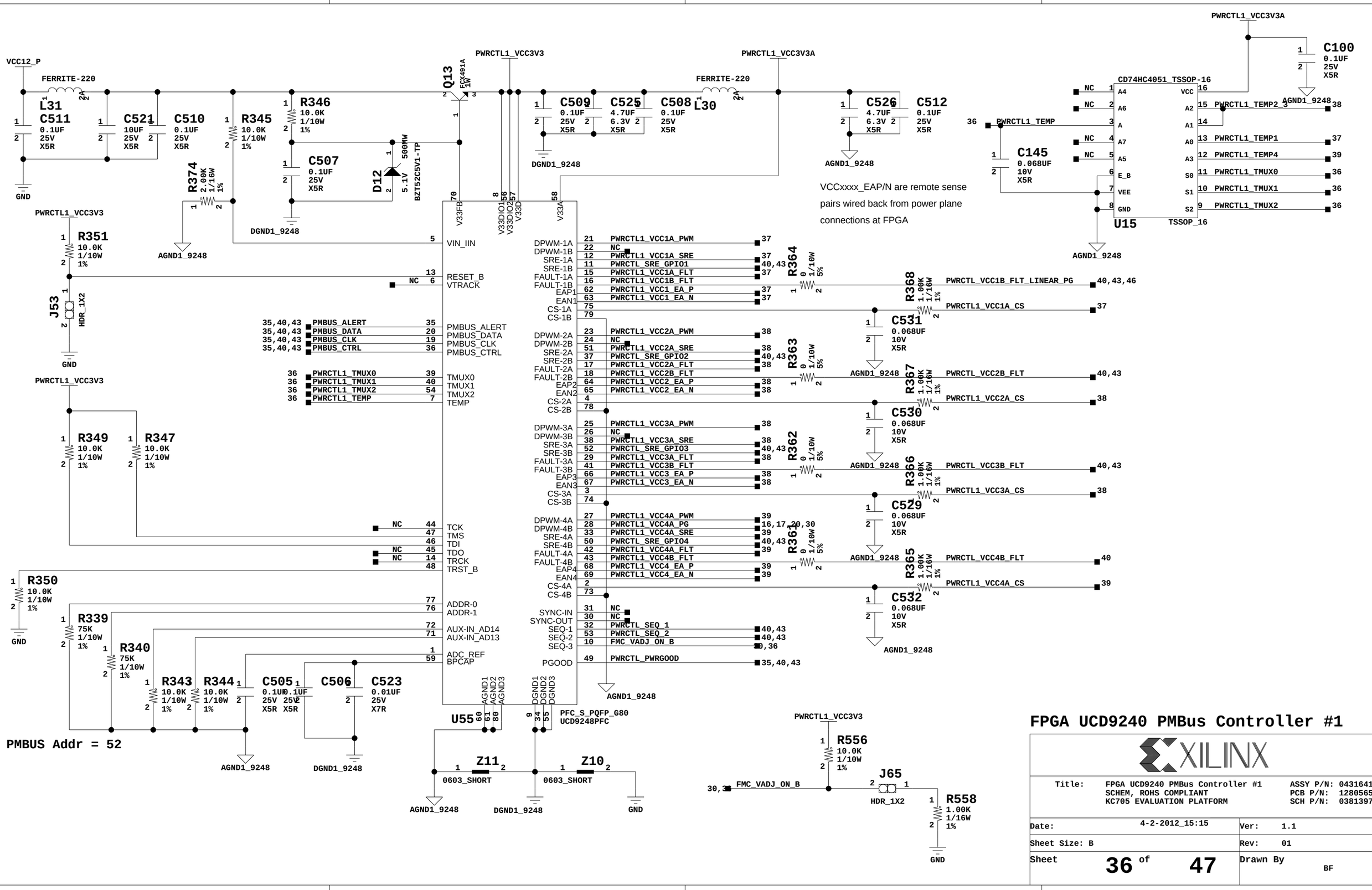
VCC12_P
FERRITE-220
L31
C511 0.1UF 25V X5R
C521 10UF 25V X5R
C510 0.1UF 25V X5R
GND
R345 10.0K 1/10W 1%
R346 10.0K 1/10W 1%
C507 0.1UF 25V X5R
R374 2.00K 1/16W 1%
AGND1_9248
DGND1_9248
D12 5.1V 500MW BZT52C5V1-TP
Q13 FCX491A 1W
PWRCTL1_VCC3V3
C509 0.1UF 25V X5R
C525 4.7UF 6.3V X5R
C508 0.1UF 25V X5R
L30 FERRITE-220
PWRCTL1_VCC3V3A
C526 4.7UF 6.3V X5R
C512 0.1UF 25V X5R
VCCxxxx_EAP/N are remote sense pairs wired back from power plane connections at FPGA
CD74HC4051_TSSOP-16
U15
PWRCTL1_TEMP
C145 0.068UF 10V X5R
C100 0.1UF 25V X5R
PWRCTL1_TEMP2_3
PWRCTL1_TEMP1
PWRCTL1_TEMP4
PWRCTL1_TMUX0
PWRCTL1_TMUX1
PWRCTL1_TMUX2
R351 10.0K 1/10W 1%
J53 HDR_1X2
R349 10.0K 1/10W 1%
R347 10.0K 1/10W 1%
R350 10.0K 1/10W 1%
R339 75K 1/10W 1%
R340 75K 1/10W 1%
R343 10.0K 1/10W 1%
R344 10.0K 1/10W 1%
C505 0.1UF 25V X5R
C506 0.1UF 25V X5R
C523 0.01UF 25V X7R
PMBUS Addr = 52
VIN_IIN
RESET_B
VTRACK
PMBUS_ALERT
PMBUS_DATA
PMBUS_CLK
PMBUS_CTRL
TMUX0
TMUX1
TMUX2
TEMP
TCK
TMS
TDI
TDO
TRCK
TRST_B
ADDR-0
ADDR-1
AUX-IN_AD14
AUX-IN_AD13
ADC_REF
BPCAP
V33FB
V33DIO1
V33DIO2
V33D
V33A
DPWM-1A
DPWM-1B
SRE-1A
SRE-1B
FAULT-1A
FAULT-1B
EAP1
EAN1
CS-1A
CS-1B
DPWM-2A
DPWM-2B
SRE-2A
SRE-2B
FAULT-2A
FAULT-2B
EAP2
EAN2
CS-2A
CS-2B
DPWM-3A
DPWM-3B
SRE-3A
SRE-3B
FAULT-3A
FAULT-3B
EAP3
EAN3
CS-3A
CS-3B
DPWM-4A
DPWM-4B
SRE-4A
SRE-4B
FAULT-4A
FAULT-4B
EAP4
EAN4
CS-4A
CS-4B
SYNC-IN
SYNC-OUT
SEQ-1
SEQ-2
SEQ-3
PGOOD
PWRCTL_VCC1A_PWM
PWRCTL_VCC1A_SRE
PWRCTL_SRE_GPIO1
PWRCTL_VCC1A_FLT
PWRCTL_VCC1B_FLT
PWRCTL_VCC1_EA_P
PWRCTL_VCC1_EA_N
PWRCTL_VCC2A_PWM
PWRCTL_VCC2A_SRE
PWRCTL_SRE_GPIO2
PWRCTL_VCC2A_FLT
PWRCTL_VCC2B_FLT
PWRCTL_VCC2_EA_P
PWRCTL_VCC2_EA_N
PWRCTL_VCC3A_PWM
PWRCTL_VCC3A_SRE
PWRCTL_SRE_GPIO3
PWRCTL_VCC3A_FLT
PWRCTL_VCC3B_FLT
PWRCTL_VCC3_EA_P
PWRCTL_VCC3_EA_N
PWRCTL_VCC4A_PWM
PWRCTL_VCC4A_PG
PWRCTL_VCC4A_SRE
PWRCTL_SRE_GPIO4
PWRCTL_VCC4A_FLT
PWRCTL_VCC4B_FLT
PWRCTL_VCC4_EA_P
PWRCTL_VCC4_EA_N
NC
PWRCTL_SEQ_1
PWRCTL_SEQ_2
FMC_VADJ_ON_B
PWRCTL_PWRGOOD
R364 0 1/10W 5%
R363 0 1/10W 5%
R362 0 1/10W 5%
R361 0 1/10W 5%
R368 1.00K 1/16W 1%
R367 1.00K 1/16W 1%
R366 1.00K 1/16W 1%
R365 1.00K 1/16W 1%
PWRCTL_VCC1B_FLT_LINEAR_PG
PWRCTL_VCC1A_CS
PWRCTL_VCC2B_FLT
PWRCTL_VCC2A_CS
PWRCTL_VCC3B_FLT
PWRCTL_VCC3A_CS
PWRCTL_VCC4B_FLT
PWRCTL_VCC4A_CS
C531 0.068UF 10V X5R
C530 0.068UF 10V X5R
C529 0.068UF 10V X5R
C532 0.068UF 10V X5R
U55
PFC_S_PQFP_G80
UCD9248PFC
Z11 0603_SHORT
Z10 0603_SHORT
R556 10.0K 1/10W 1%
J65 HDR_1X2
R558 1.00K 1/16W 1%
FPGA UCD9240 PMBus Controller #1
XILINX
Title: FPGA UCD9240 PMBus Controller #1
SCHEM, ROHS COMPLIANT
KC705 EVALUATION PLATFORM
ASSY P/N: 0431641
PCB P/N: 1280565
SCH P/N: 0381397
Date: 4-2-2012_15:15
Ver: 1.1
Sheet Size: B
Rev: 01
Sheet 36 of 47
Drawn By BF

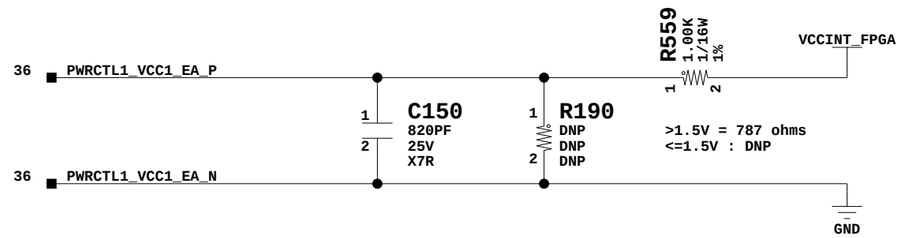

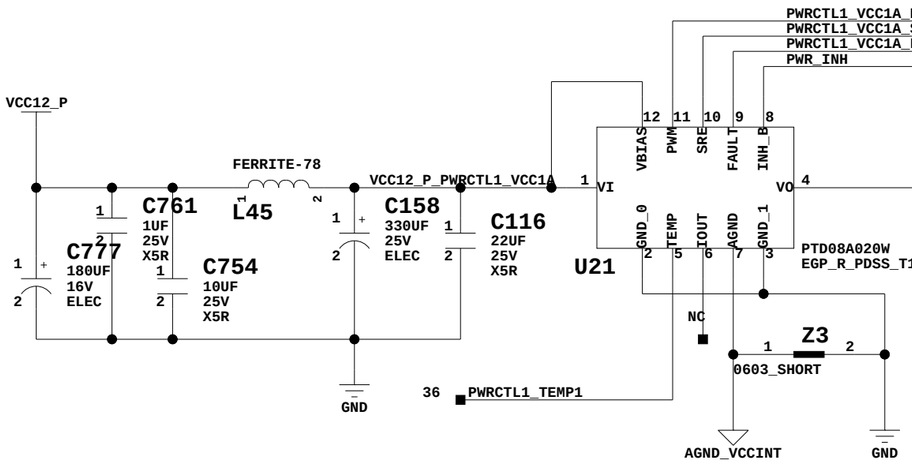

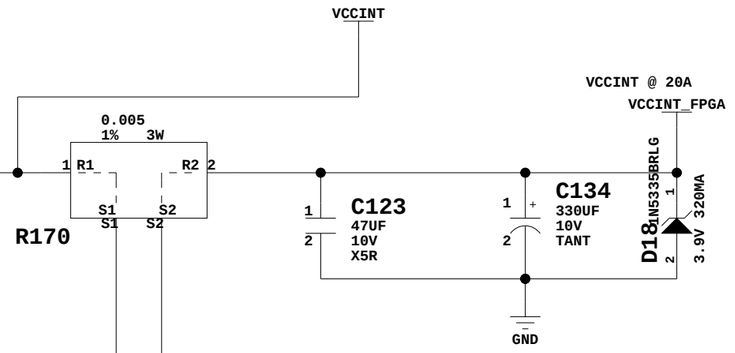

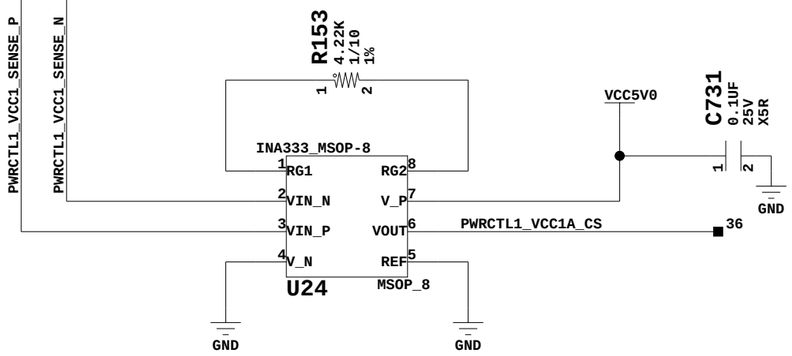

PTD08A020W 20A Max. Power Channel

XILINX

Title:	PTD08A010W 20A Max. Power Channel SCHEM, ROHS COMPLIANT KC705 EVALUATION PLATFORM	ASSY P/N:	0431641
		PCB P/N:	1280565
		SCH P/N:	0381397
Date:	4-2-2012_15:15	Ver:	1.1
Sheet Size: B		Rev:	01
Sheet	37 of 47	Drawn By	BF

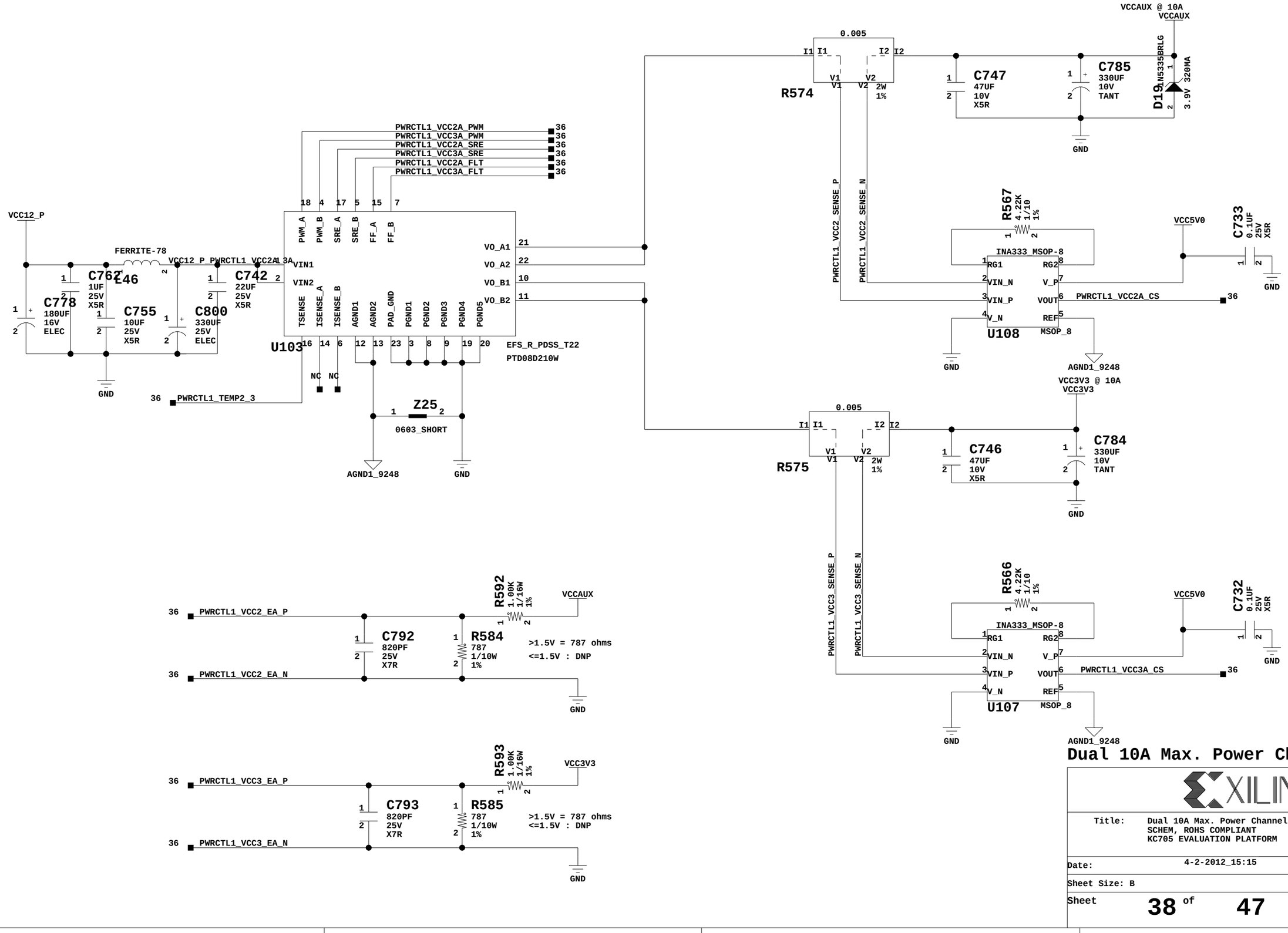

Dual 10A Max. Power Channels

XILINX

Title:	Dual 10A Max. Power Channels SCHEM, ROHS COMPLIANT KC705 EVALUATION PLATFORM	ASSY P/N: 0431641 PCB P/N: 1280565 SCH P/N: 0381397	
Date:	4-2-2012_15:15	Ver:	1.1
Sheet Size: B		Rev:	01
Sheet	38 of 47	Drawn By	BF

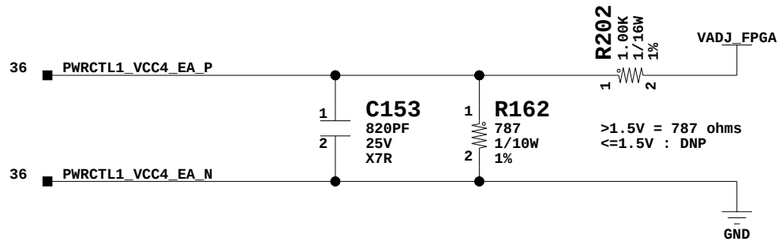

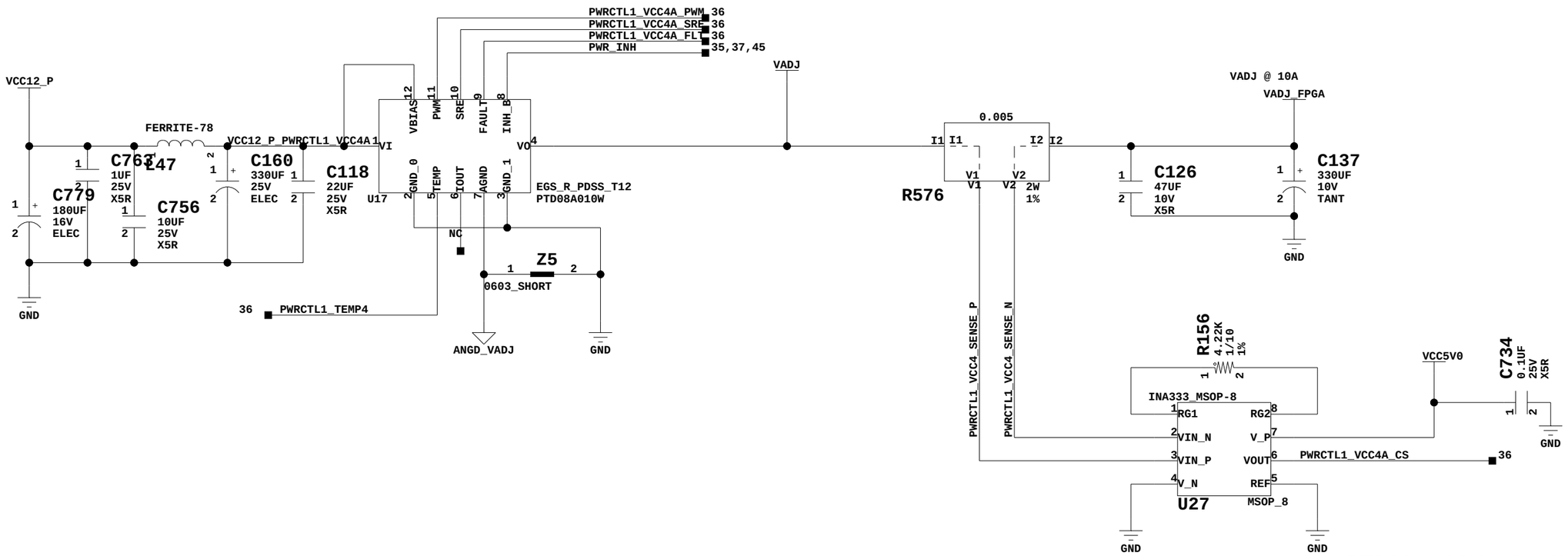

PTD08A010W 10A Max. Power Channel

XILINX

Title:	PTD08A010W 10A Max. Power Channel SCHEM, ROHS COMPLIANT KC705 EVALUATION PLATFORM	ASSY P/N: 0431641 PCB P/N: 1280565 SCH P/N: 0381397	
Date:	4-2-2012_15:15	Ver:	1.1
Sheet Size: B		Rev:	01
Sheet	39 of 47	Drawn By	BF

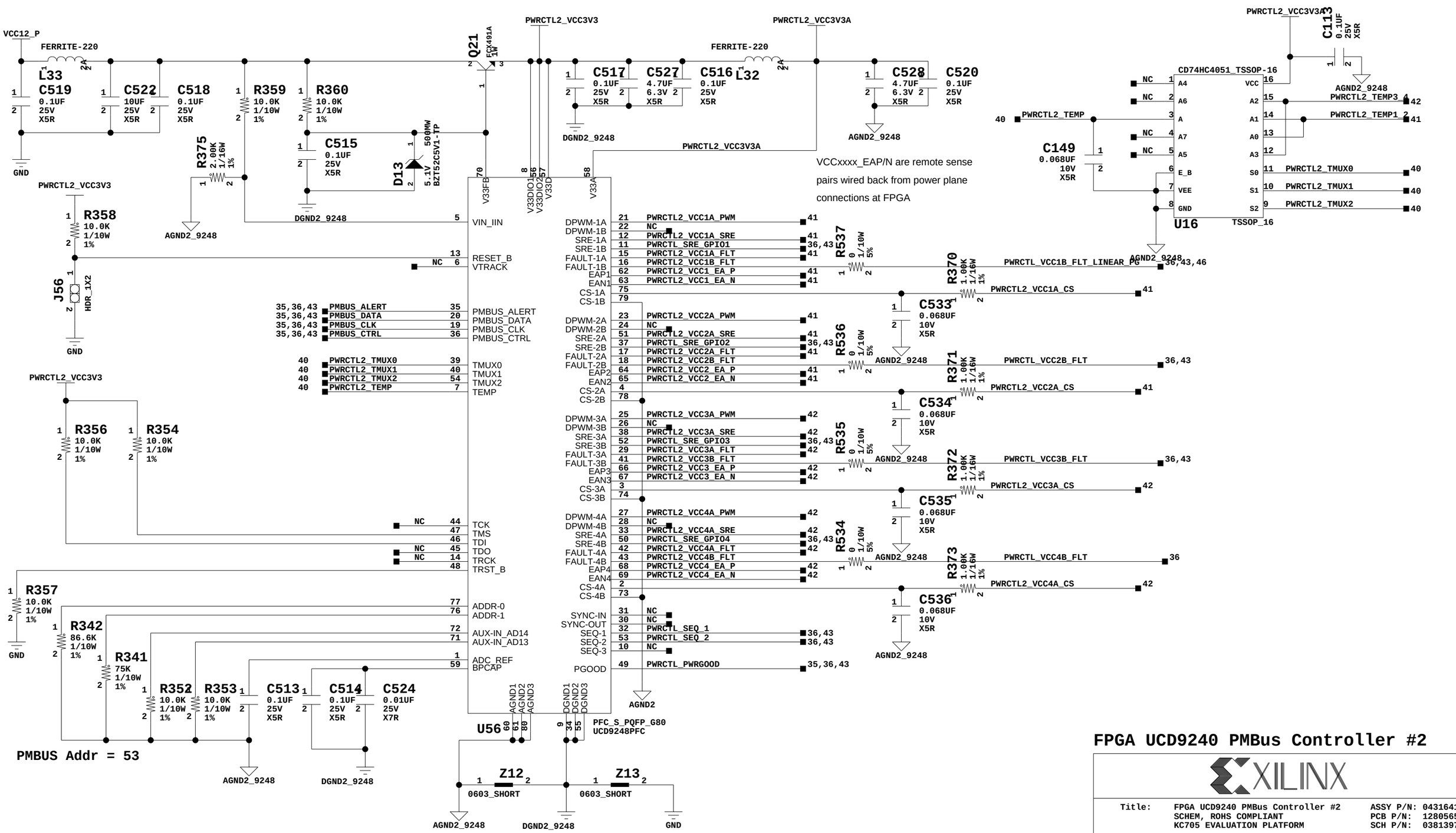

FPGA UCD9240 PMBus Controller #2

XILINX

Title:	FPGA UCD9240 PMBus Controller #2 SCHEM, ROHS COMPLIANT KC705 EVALUATION PLATFORM	ASSY P/N:	0431641
		PCB P/N:	1280565
		SCH P/N:	0381397
Date:	4-2-2012_15:15	Ver:	1.1
Sheet Size: B		Rev:	01
Sheet	40 of 47	Drawn By	BF

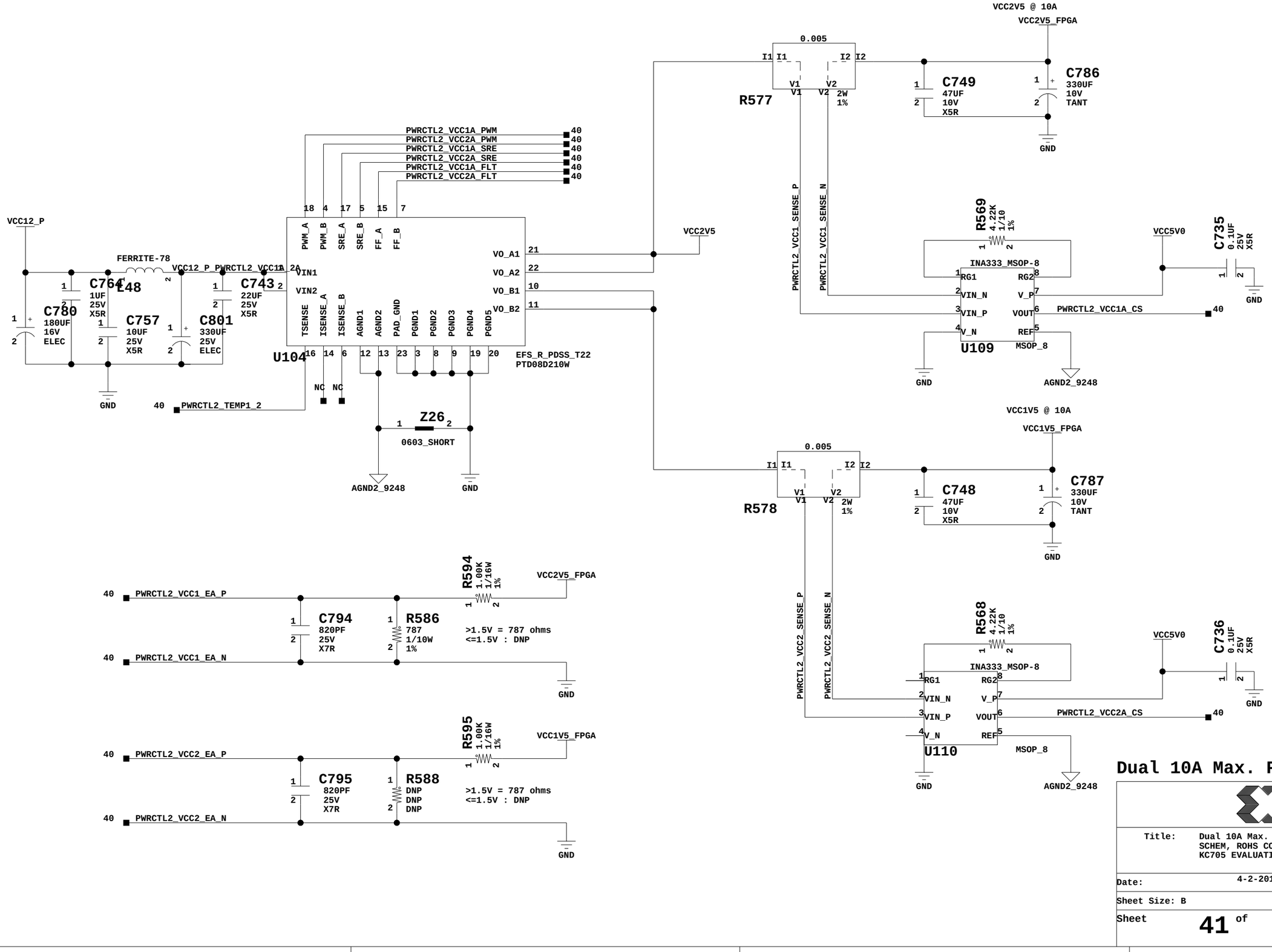

Dual 10A Max. Power Channels

XILINX

Title:	Dual 10A Max. Power Channels SCHEM, ROHS COMPLIANT KC705 EVALUATION PLATFORM	ASSY P/N:	0431641
		PCB P/N:	1280565
		SCH P/N:	0381397
Date:	4-2-2012_15:15	Ver:	1.1
Sheet Size: B		Rev:	01
Sheet	41 of 47	Drawn By	BF

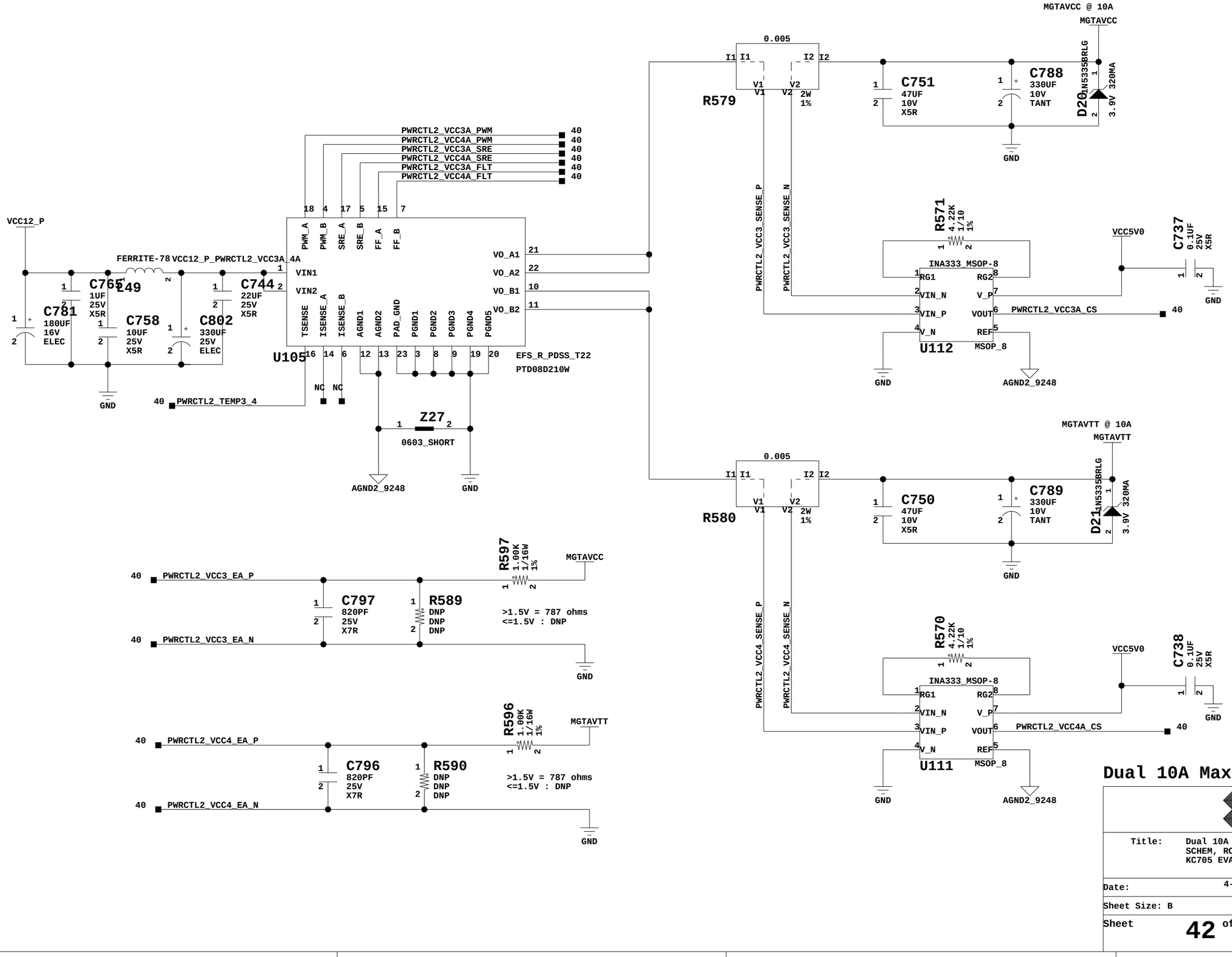

Dual 10A Max. Power Channels

Title:	Dual 10A Max. Power Channels SCHEM, ROHS COMPLIANT KC705 EVALUATION PLATFORM	ASSY P/N: 0431641 PCB P/N: 1280565 SCH P/N: 0381397	
Date:	4-2-2012_15:15	Ver:	1.1
Sheet Size: B		Rev:	01
Sheet	42 of 47	Drawn By	BF

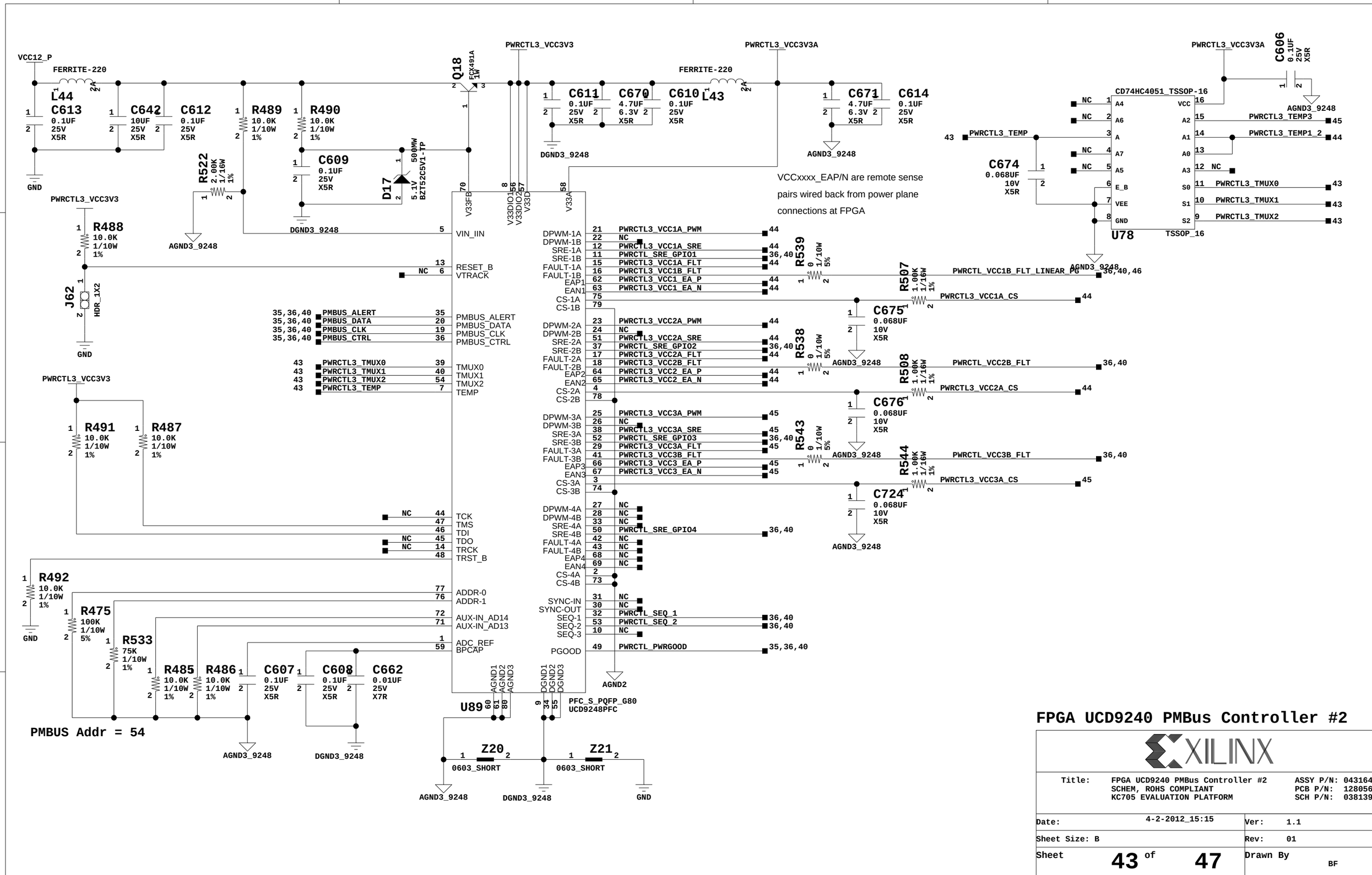
VCC12_P
FERRITE-220
L44
C613 0.1UF 25V X5R
C642 10UF 25V X5R
C612 0.1UF 25V X5R
R489 10.0K 1/10W 1%
R490 10.0K 1/10W 1%
C609 0.1UF 25V X5R
R522 2.00K 1/16W 1%
D17 5.1V 500MW BZT52C5V1-TP
Q18 FCX491A 1W
PWRCTL3_VCC3V3
PWRCTL3_VCC3V3A
C611 0.1UF 25V X5R
C670 4.7UF 6.3V X5R
C610 0.1UF 25V X5R
L43
C671 4.7UF 6.3V X5R
C614 0.1UF 25V X5R
DGND3_9248
AGND3_9248
VCCxxxx_EAP/N are remote sense pairs wired back from power plane connections at FPGA
C606 0.1UF 25V X5R
CD74HC4051_TSSOP-16
U78
TSSOP_16
PWRCTL3_TEMP
C674 0.068UF 10V X5R
PWRCTL3_TEMP3
PWRCTL3_TEMP1_2
PWRCTL3_TMUX0
PWRCTL3_TMUX1
PWRCTL3_TMUX2
R488 10.0K 1/10W 1%
J62 HDR_1X2
GND
VIN_IIN
RESET_B
VTRACK
PMBUS_ALERT
PMBUS_DATA
PMBUS_CLK
PMBUS_CTRL
TMUX0
TMUX1
TMUX2
TEMP
TCK
TMS
TDI
TDO
TRCK
TRST_B
ADDR-0
ADDR-1
AUX-IN_AD14
AUX-IN_AD13
ADC_REF
BPCAP
DPWM-1A
DPWM-1B
SRE-1A
SRE-1B
FAULT-1A
FAULT-1B
EAP1
EAN1
CS-1A
CS-1B
DPWM-2A
DPWM-2B
SRE-2A
SRE-2B
FAULT-2A
FAULT-2B
EAP2
EAN2
CS-2A
CS-2B
DPWM-3A
DPWM-3B
SRE-3A
SRE-3B
FAULT-3A
FAULT-3B
EAP3
EAN3
CS-3A
CS-3B
DPWM-4A
DPWM-4B
SRE-4A
SRE-4B
FAULT-4A
FAULT-4B
EAP4
EAN4
CS-4A
CS-4B
SYNC-IN
SYNC-OUT
SEQ-1
SEQ-2
SEQ-3
PGOOD
PWRCTL3_VCC1A_PWM
PWRCTL3_VCC1A_SRE
PWRCTL_SRE_GPIO1
PWRCTL3_VCC1A_FLT
PWRCTL3_VCC1B_FLT
PWRCTL3_VCC1_EA_P
PWRCTL3_VCC1_EA_N
PWRCTL3_VCC2A_PWM
PWRCTL3_VCC2A_SRE
PWRCTL_SRE_GPIO2
PWRCTL3_VCC2A_FLT
PWRCTL3_VCC2B_FLT
PWRCTL3_VCC2_EA_P
PWRCTL3_VCC2_EA_N
PWRCTL3_VCC3A_PWM
PWRCTL3_VCC3A_SRE
PWRCTL_SRE_GPIO3
PWRCTL3_VCC3A_FLT
PWRCTL3_VCC3B_FLT
PWRCTL3_VCC3_EA_P
PWRCTL3_VCC3_EA_N
PWRCTL_SRE_GPIO4
PWRCTL_SEQ_1
PWRCTL_SEQ_2
PWRCTL_PWRGOOD
R539 0 1/10W 5%
R507 1.00K 1/16W 1%
PWRCTL_VCC1B_FLT_LINEAR_PG
PWRCTL3_VCC1A_CS
C675 0.068UF 10V X5R
R538 0 1/10W 5%
R508 1.00K 1/16W 1%
PWRCTL_VCC2B_FLT
PWRCTL3_VCC2A_CS
C676 0.068UF 10V X5R
R543 0 1/10W 5%
R544 1.00K 1/16W 1%
PWRCTL_VCC3B_FLT
PWRCTL3_VCC3A_CS
C724 0.068UF 10V X5R
R491 10.0K 1/10W 1%
R487 10.0K 1/10W 1%
R492 10.0K 1/10W 1%
R475 100K 1/10W 5%
R533 75K 1/10W 1%
R485 10.0K 1/10W 1%
R486 10.0K 1/10W 1%
C607 0.1UF 25V X5R
C608 0.1UF 25V X5R
C662 0.01UF 25V X7R
PMBUS Addr = 54
U89
PFC_S_PQFP_G80
UCD9248PFC
AGND2
Z20 0603_SHORT
Z21 0603_SHORT
FPGA UCD9240 PMBus Controller #2
XILINX
Title: FPGA UCD9240 PMBus Controller #2
SCHEM, ROHS COMPLIANT
KC705 EVALUATION PLATFORM
ASSY P/N: 0431641
PCB P/N: 1280565
SCH P/N: 0381397
Date: 4-2-2012_15:15
Ver: 1.1
Sheet Size: B
Rev: 01
Sheet 43 of 47
Drawn By BF

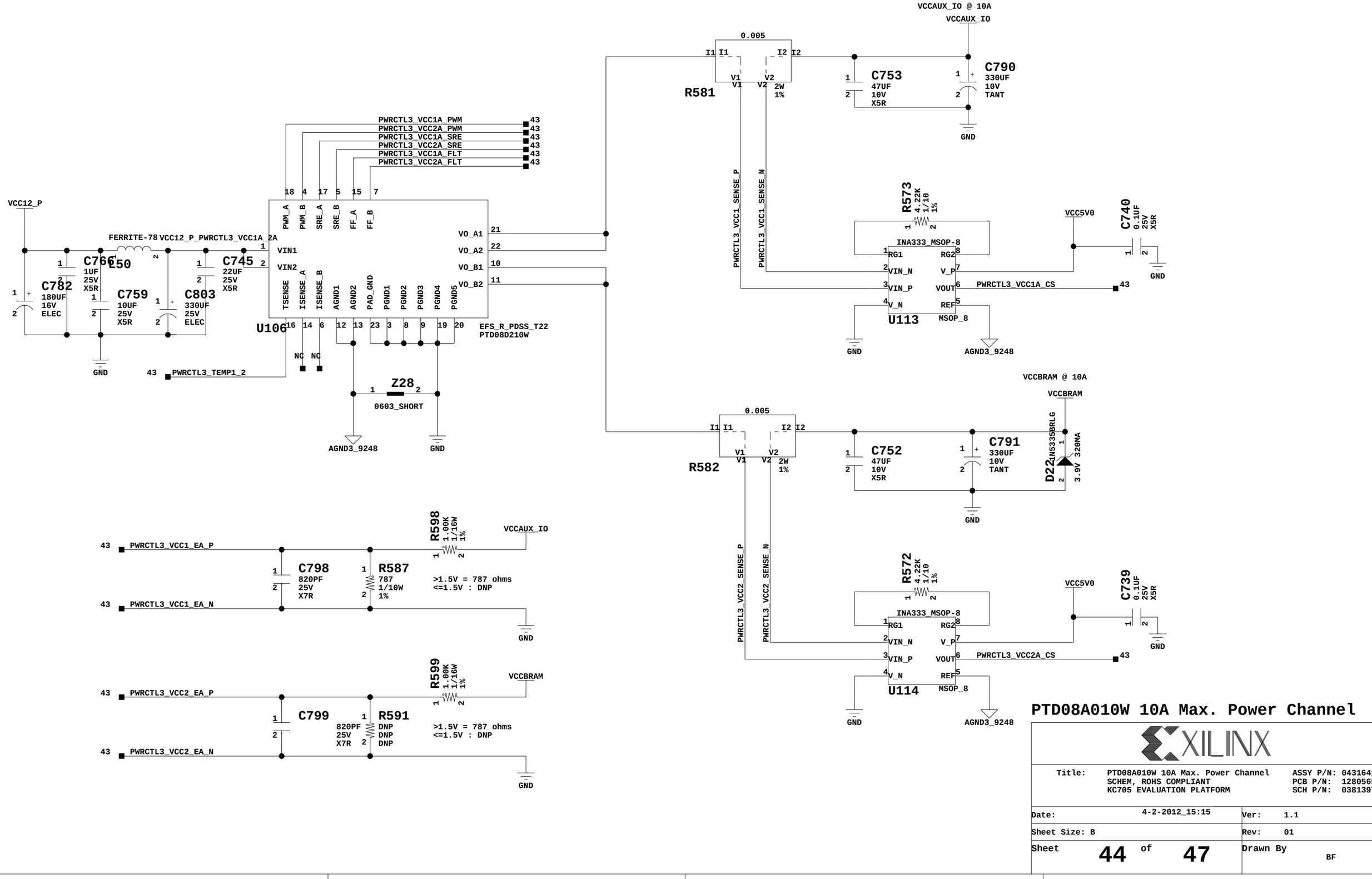

PTD08A010W 10A Max. Power Channel

Title:	PTD08A010W 10A Max. Power Channel SCHEM, ROHS COMPLIANT KC705 EVALUATION PLATFORM	ASSY P/N: 0431641 PCB P/N: 1280565 SCH P/N: 0381397	
Date:	4-2-2012_15:15	Ver:	1.1
Sheet Size: B		Rev:	01
Sheet	44 of 47	Drawn By	BF

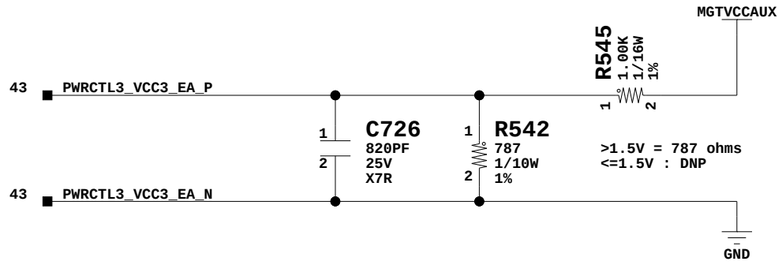

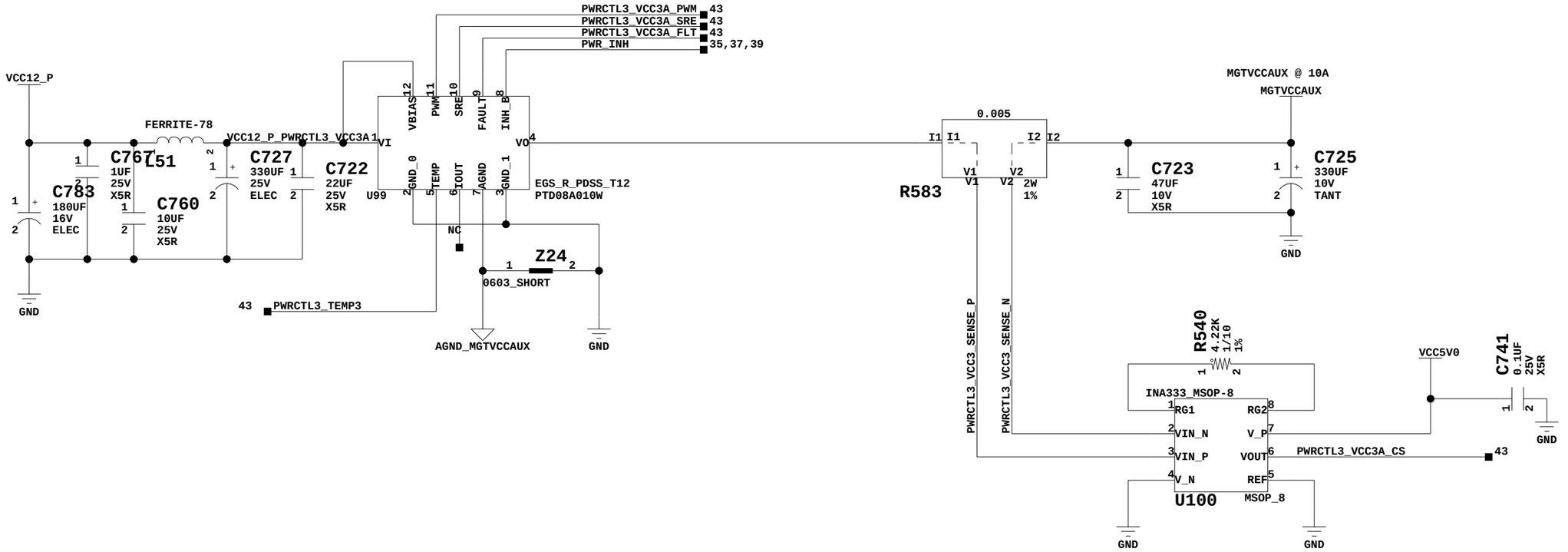

PTD08A010W 10A Max. Power Channel

XILINX

Title:	PTD08A010W 10A Max. Power Channel SCHEM, ROHS COMPLIANT KC705 EVALUATION PLATFORM	ASSY P/N:	0431641
		PCB P/N:	1280565
		SCH P/N:	0381397
Date:	4-2-2012_15:15	Ver:	1.1
Sheet Size: B		Rev:	01
Sheet	45 of 47	Drawn By	BF

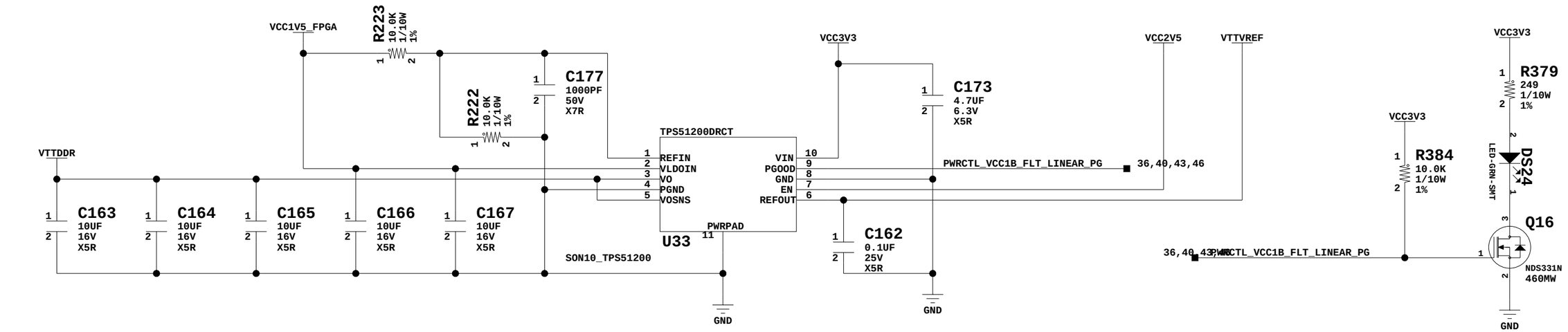

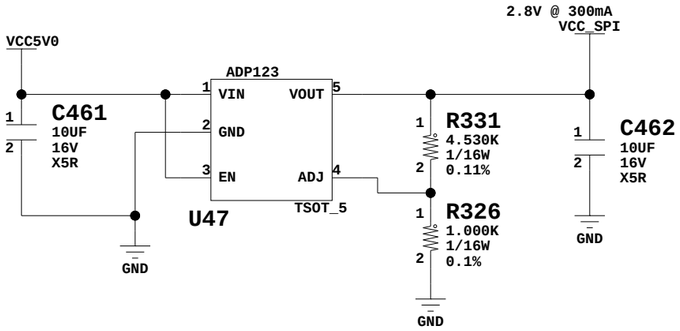

VOUT = 0.5 V(1 + R1/R2) + (0.000000015A)(R1)

VOUT = 2.8200V

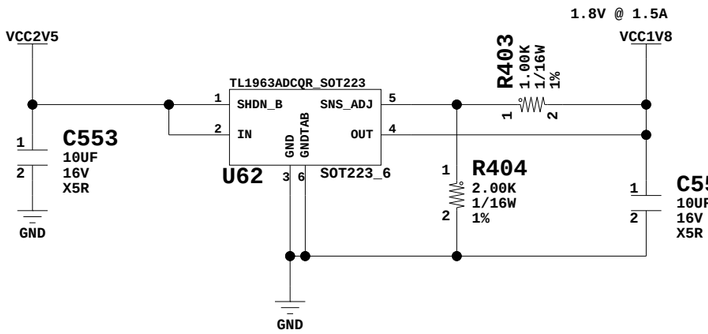

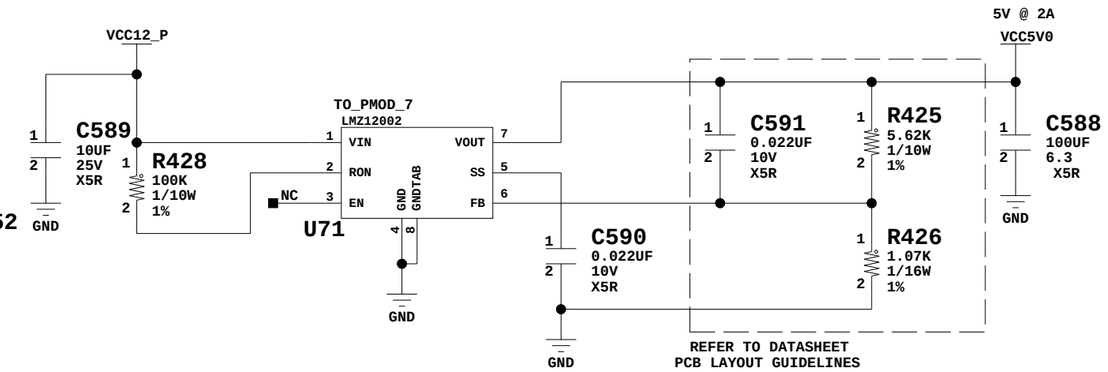

Linear Power Supplies

Title:	Linear Power Supplies SCHEM, ROHS COMPLIANT KC705 EVALUATION PLATFORM	ASSY P/N: 0431641 PCB P/N: 1280565 SCH P/N: 0381397	
Date:	4-2-2012_15:15	Ver:	1.1
Sheet Size: B		Rev:	01
Sheet	46 of 47	Drawn By	BF

MMD1

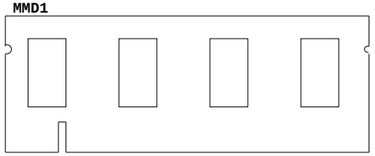

DDR3_SODIMM

CBL1

4-Pin ATX Power

6-Pin Molex Mini-fit Jr.

PCIe Adapter Cable

PCIE_ADAPTER_CABLE

CBL2

110V Prong

IEC320-C13

Power Cord

PC_POWER_CABLE

PB1

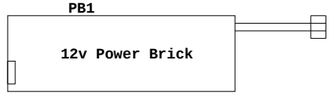

PWR_BRICK_12V

CBL3

USB A

USB Mini-B

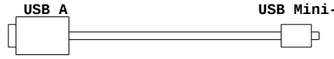

USB Mini-B Cable

USB_MINIB_CABLE

CBL4

USB A

USB Mini-B

USB Micro-B Cable

USB_MICRO_CABLE

12V Fan Assembly, w/TACH Output

HS1

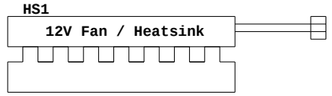

12VDC

MJB1 MJB2 MJB3 MJB4

JUMPER_BLOCK_2-PIN JUMPER_BLOCK_2-PIN JUMPER_BLOCK_2-PIN JUMPER_BLOCK_2-PIN

PL1

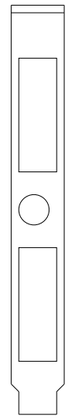

KC705_PCIE_PLATE

MSTK1

PCIE_POWER_STICKER

LCD Display Assembly

SLW-107-01-G-D

Female Header

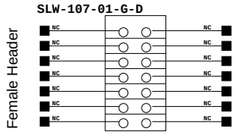

LCD1_J31

LCD1

LCD Mounting HW

STANDOFF_10MM

MS09

MACHINE_SCREW_M2_5

MS12

MACHINE_SCREW_M2_5

MS9

MH_110_135

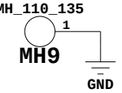

STANDOFF_10MM

MS07

MACHINE_SCREW_M2_5

MS7

MACHINE_SCREW_M2_5

MS10

MH_110_135

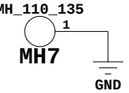

STANDOFF_10MM

MS08

MACHINE_SCREW_M2_5

MS8

MACHINE_SCREW_M2_5

MS11

MH_110_135

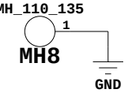

STANDOFF_MF_0P375

MS01

RUBBER_BUMPER

MRB1

NUT_SS_4-40

MN1

MACHINE_SCREW_4-40

MS1

MH_125_250

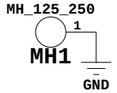

STANDOFF_MF_0P375

MS02

RUBBER_BUMPER

MRB2

NUT_SS_4-40

MN2

MACHINE_SCREW_4-40

MS2

MH_125_250

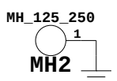

STANDOFF_0P375

MS03

RUBBER_BUMPER

MRB3

NUT_SS_4-40

MN3

MACHINE_SCREW_4-40

MS3

MH_125_250

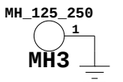

STANDOFF_0P375

MS04

RUBBER_BUMPER

MRB4

NUT_SS_4-40

MN4

MACHINE_SCREW_4-40

MS4

MH_125_250

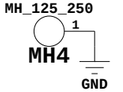

STANDOFF_0P375

MS05

RUBBER_BUMPER

MRB5

NUT_SS_4-40

MN5

MACHINE_SCREW_4-40

MS5

MH_125_250

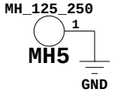

STANDOFF_0P375

MS06

RUBBER_BUMPER

MRB6

NUT_SS_4-40

MN6

MACHINE_SCREW_4-40

MS6

MH_125_250

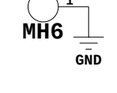

Mechanical Components

XILINX

Title:	Mechanical Components SCHEM, ROHS COMPLIANT KC705 EVALUATION PLATFORM	ASSY P/N: 0431641 PCB P/N: 1280565 SCH P/N: 0381397
Date: 4-2-2012_15:15		Ver: 1.1
Sheet Size: B		Rev: 01
Sheet 47 of 47		Drawn By BF