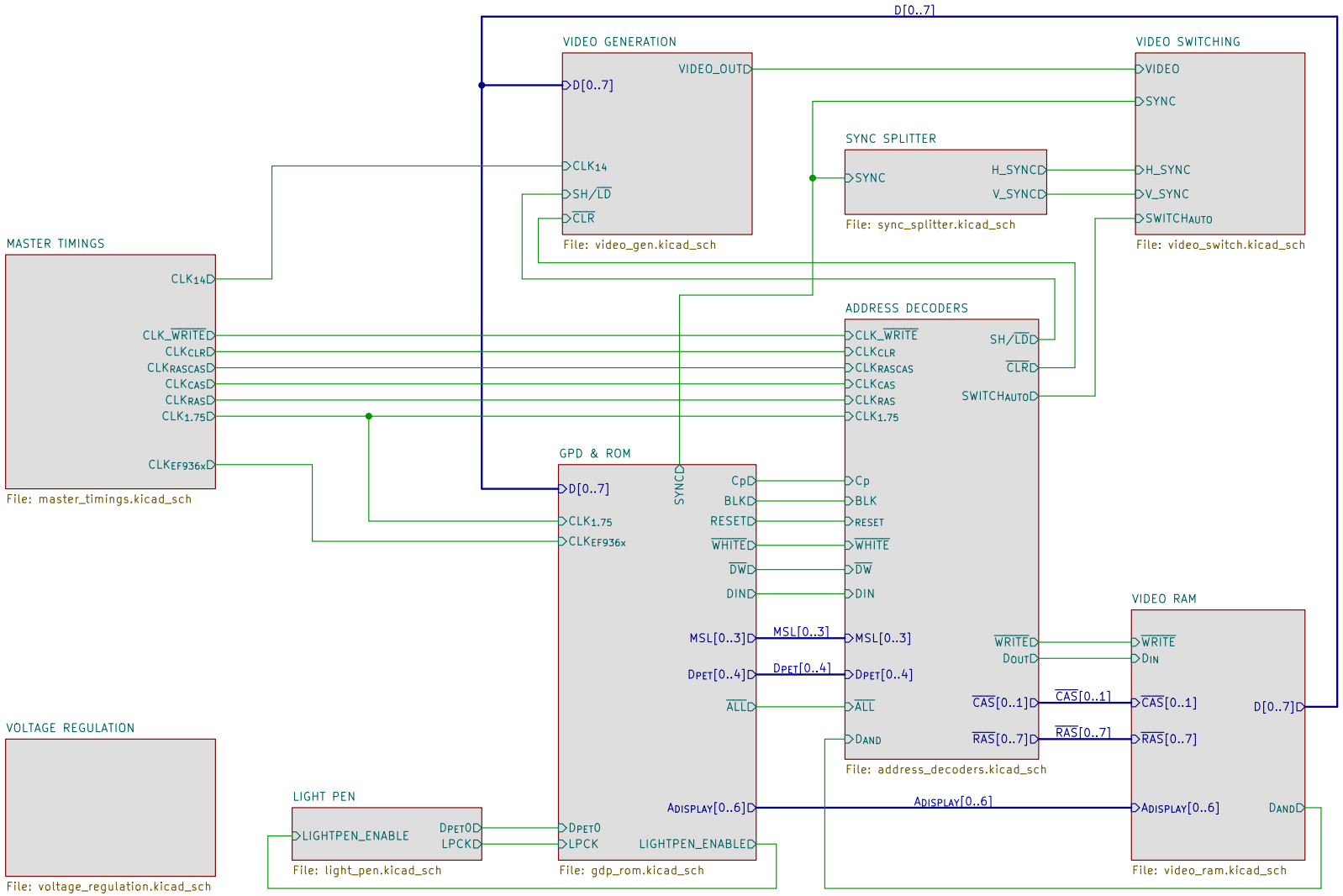

LOW SPEED GRAPHIK

Author: InsaneDruid
License: CC BY 4.0
creativecommons.org/licenses/by/4.0/
reverse-engineered in 2022

Sheet: /
File: HSG.kicad_sch

Title: LOW SPEED GRAPHIK

Size: A4	Date: 2022-03-13	Rev: V001
KiCad E.D.A. kicad (6.0.4)		Id: 1/10

VOLTAGE REGULATION

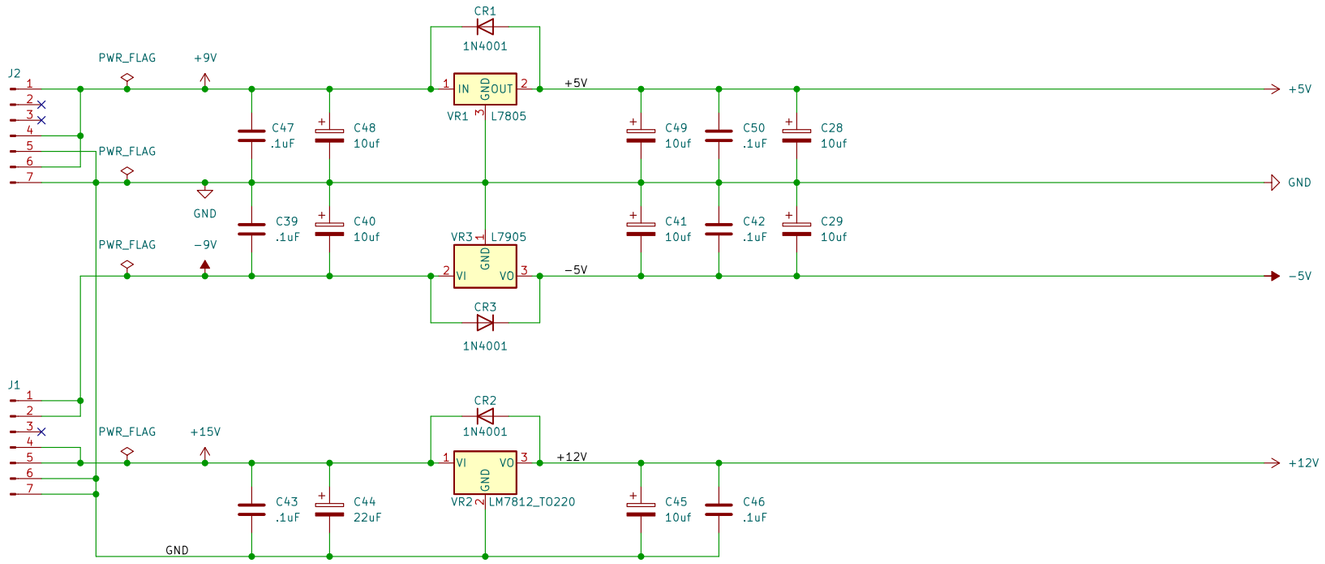

DECOUPLING CAPS

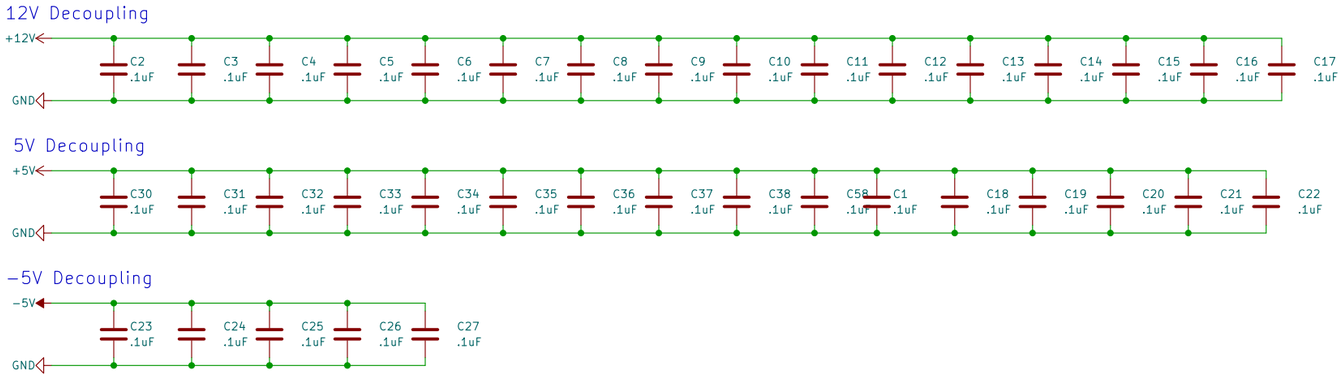

COMMON POWER PINS

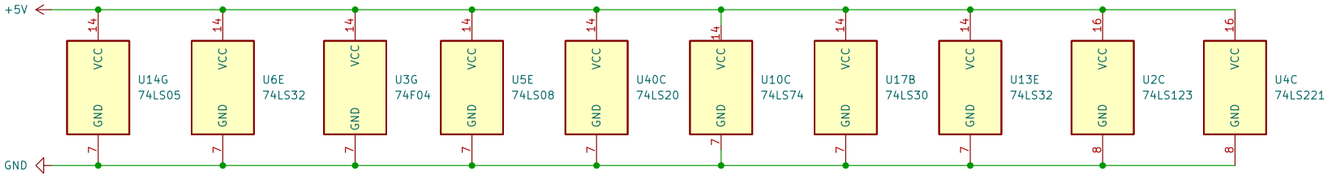

Author: InsaneDruid
License: CC BY 4.0
creativecommons.org/licenses/by/4.0/
reverse-engineered in 2022

Sheet: /VOLTAGE REGULATION/
File: voltage_regulation.kicad_sch

Title: LOW SPEED GRAPHIK

Size: A3	Date: 2022-03-18	Rev: V001
KiCad E.D.A. kicad (6.0.4)		Id: 2/10

MASTER TIMINGS

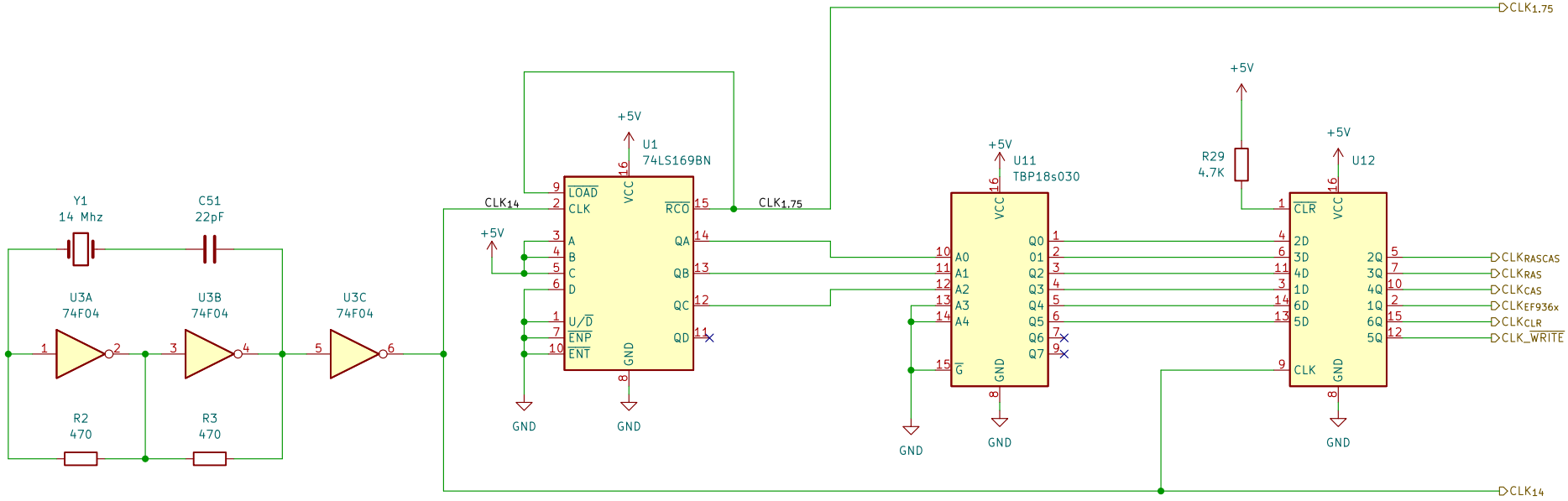

Author: InsaneDruid
License: CC BY 4.0
creativecommons.org/licenses/by/4.0/
reverse-engineered in 2022

Sheet: /MASTER TIMINGS/
File: master_timings.kicad_sch

Title: LOW SPEED GRAPHIK

Size: A4	Date: 2022-03-13	Rev: V001
KiCad E.D.A. kicad (6.0.4)		Id: 3/10

GPD & ROM

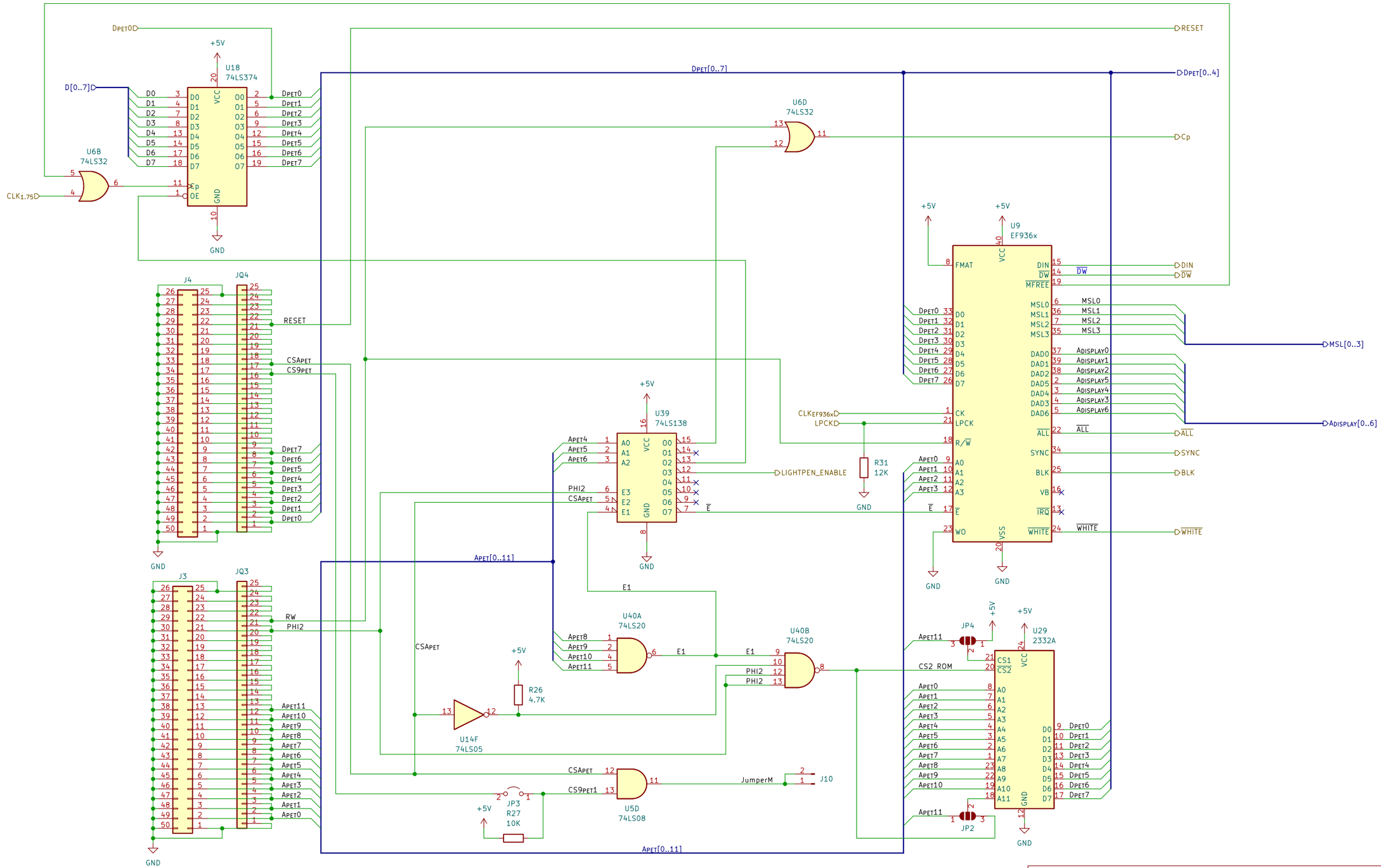

Author: InsaneDruid
License: CC BY 4.0
creativecommons.org/licenses/by/4.0/
reverse-engineered in 2022

Sheet: /GPD & ROM/
File: gdp_rom.kicad_sch

Title: LOW SPEED GRAPHIK

Size: A3	Date: 2022-03-13	Rev: V001
KiCad E.D.A. kicad (6.0.4)		Id: 4/10

ADDRESS DECODERS

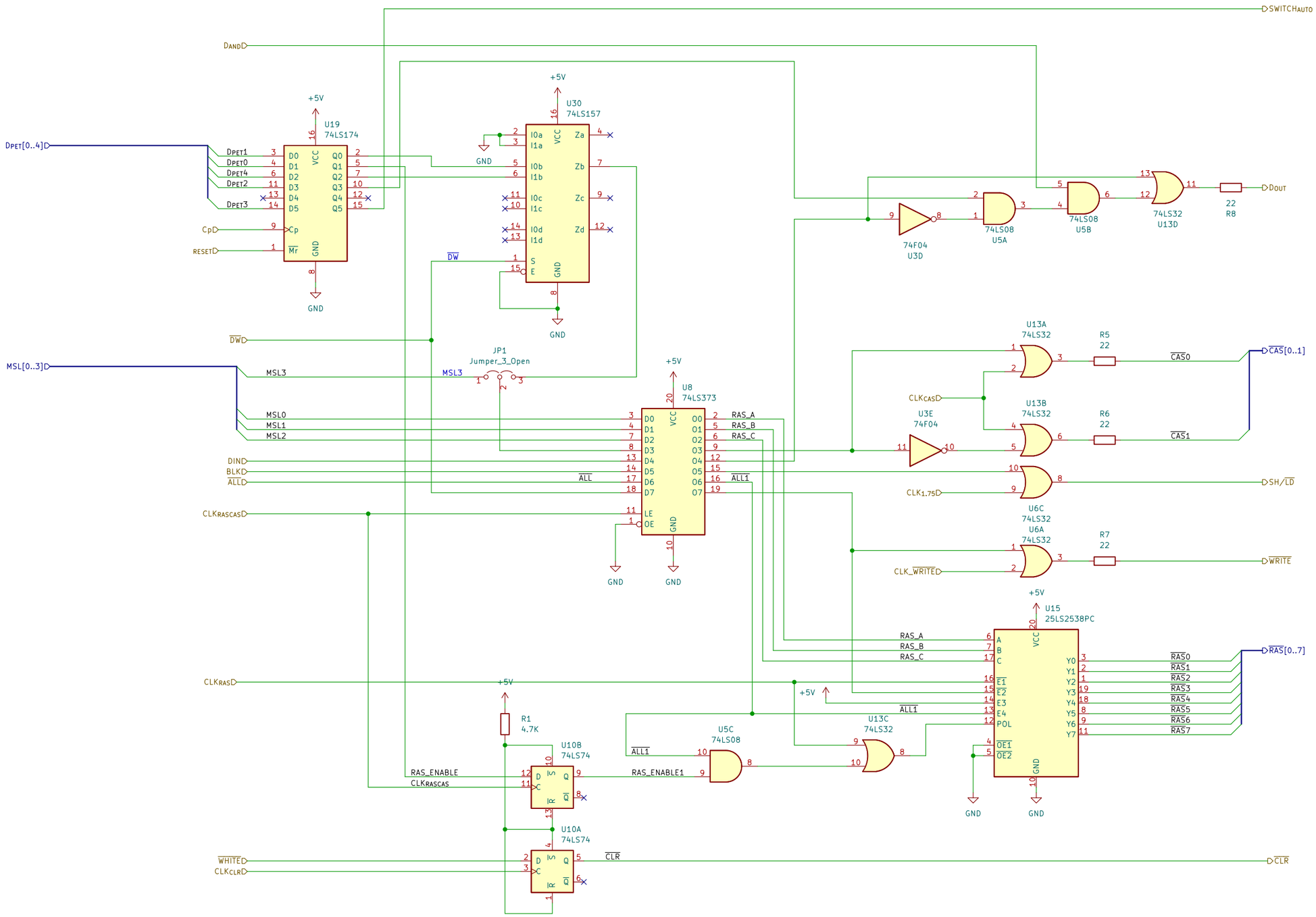

Author: InsaneDruid
License: CC BY 4.0
creativecommons.org/licenses/by/4.0/
reverse-engineered in 2022

Sheet: /ADDRESS DECODERS/
File: address_decoders.kicad_sch

Title: LOW SPEED GRAPHIK

Size: A3	Date: 2022-03-13	Rev: V001
KiCad E.D.A. kicad (6.0.4)		Id: 5/10

VIDEO RAM

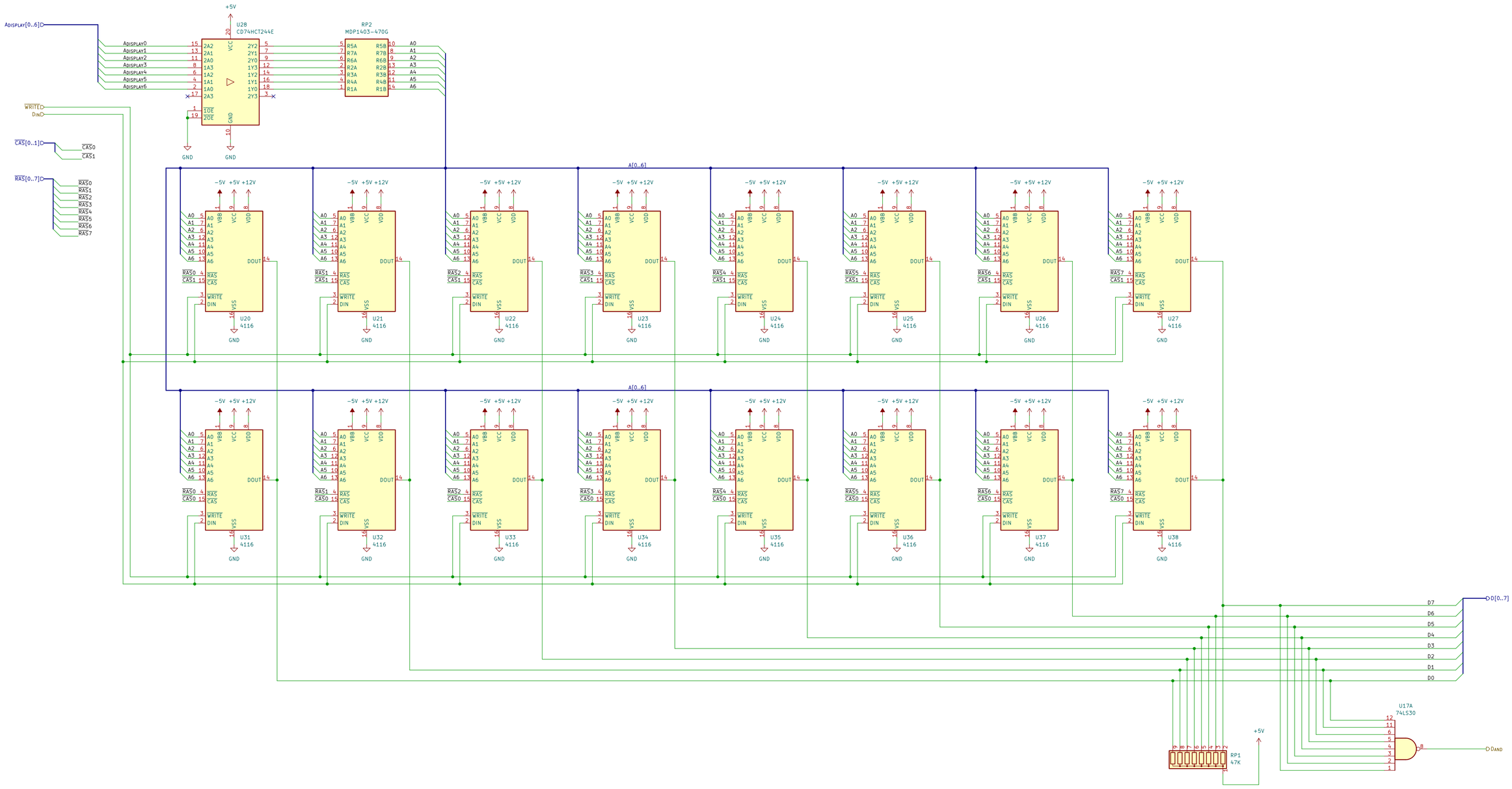

Author: InsaneDruid
License: CC BY 4.0
creativecommons.org/licenses/by/4.0/
reverse-engineered in 2022

Sheet: /VIDEO RAM/
File: video_ram.kicad_sch

Title: LOW SPEED GRAPHIK

Size: A2	Date: 2022-03-13	Rev: V001
KiCad E.D.A. kicad (6.0.4)		Id: 6/10

VIDEO GENERATION

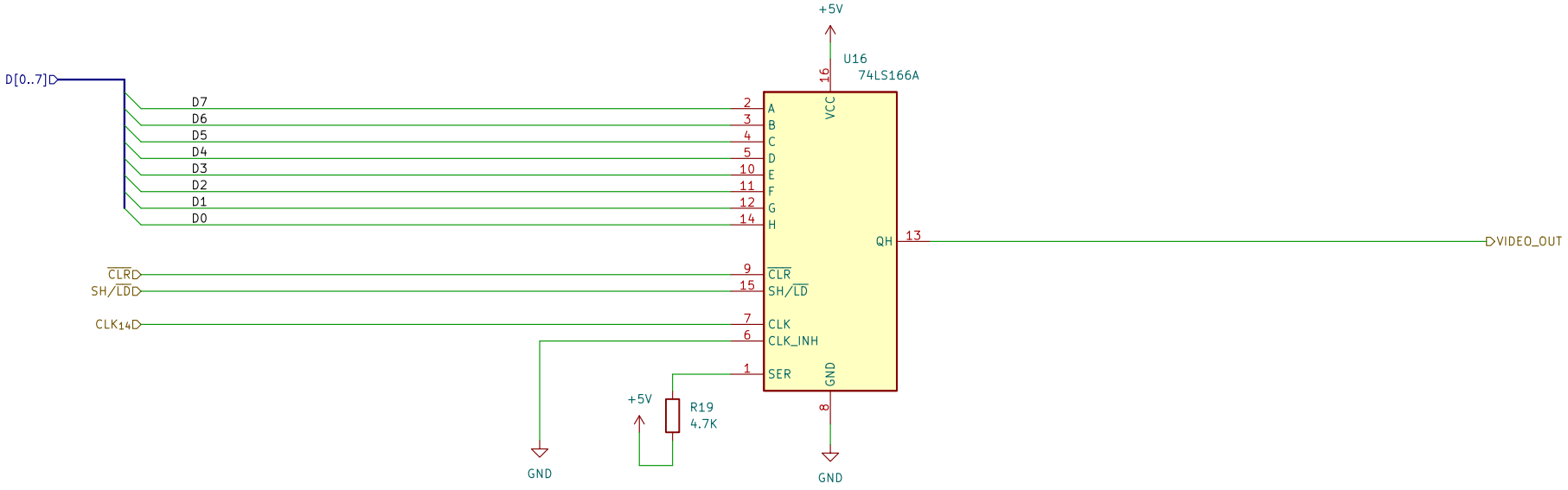

Author: InsaneDruid
License: CC BY 4.0
creativecommons.org/licenses/by/4.0/
reverse-engineered in 2022

Sheet: /VIDEO GENERATION/
File: video_gen.kicad_sch

Title: LOW SPEED GRAPHIK

Size: A4	Date: 2022-03-13	**Rev: V001**
KiCad E.D.A. kicad (6.0.4)		Id: 7/10

SYNC SPLITTER

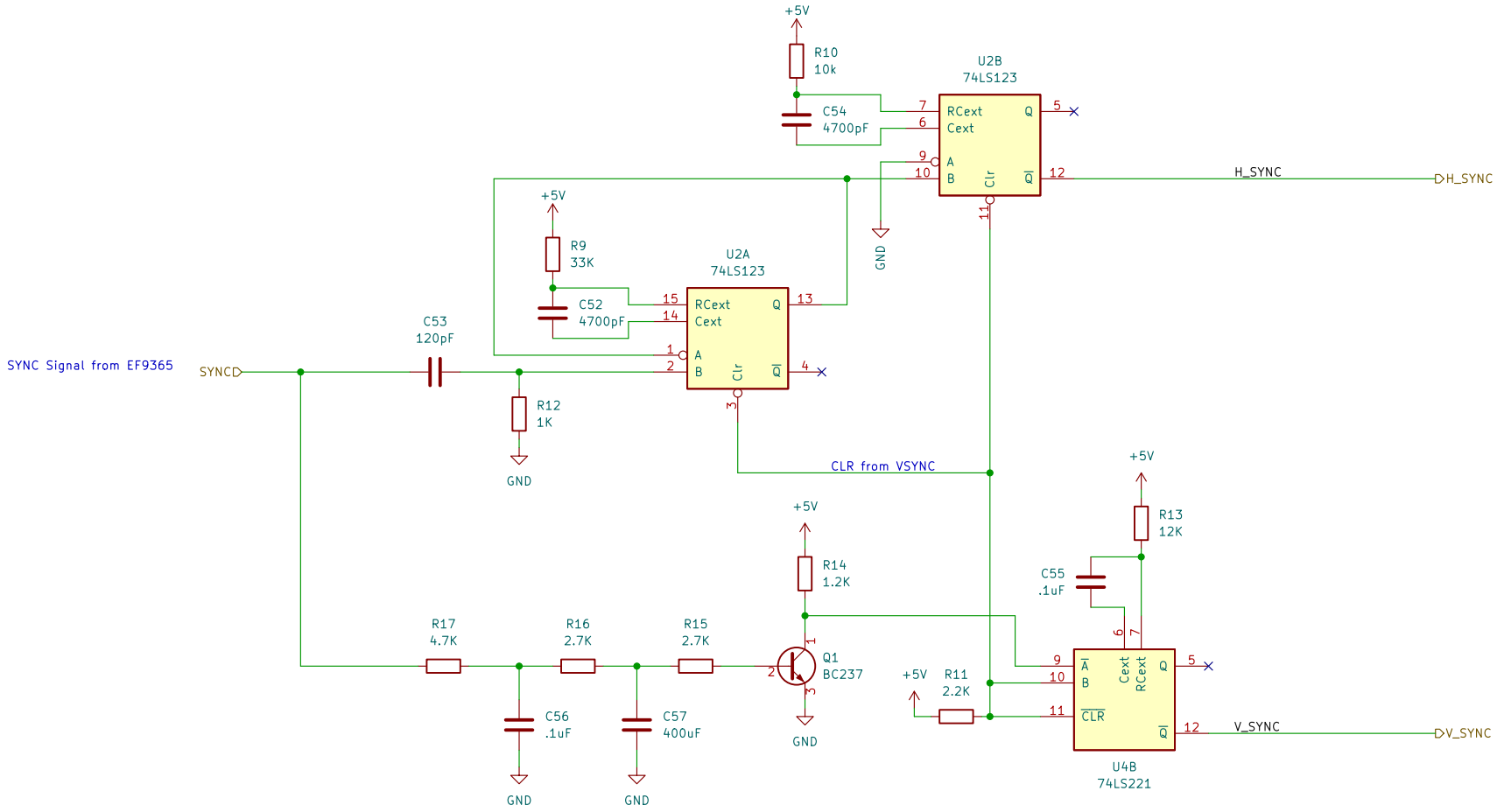

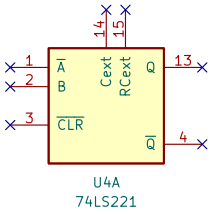

Author: InsaneDruid
License: CC BY 4.0
creativecommons.org/licenses/by/4.0/
reverse-engineered in 2022

Sheet: /SYNC SPLITTER/
File: sync_splitter.kicad_sch

Title: LOW SPEED GRAPHIK

Size: A4	Date: 2022-03-13	Rev: V001
KiCad E.D.A. kicad (6.0.4)		Id: 8/10

VIDEO SWITCHING

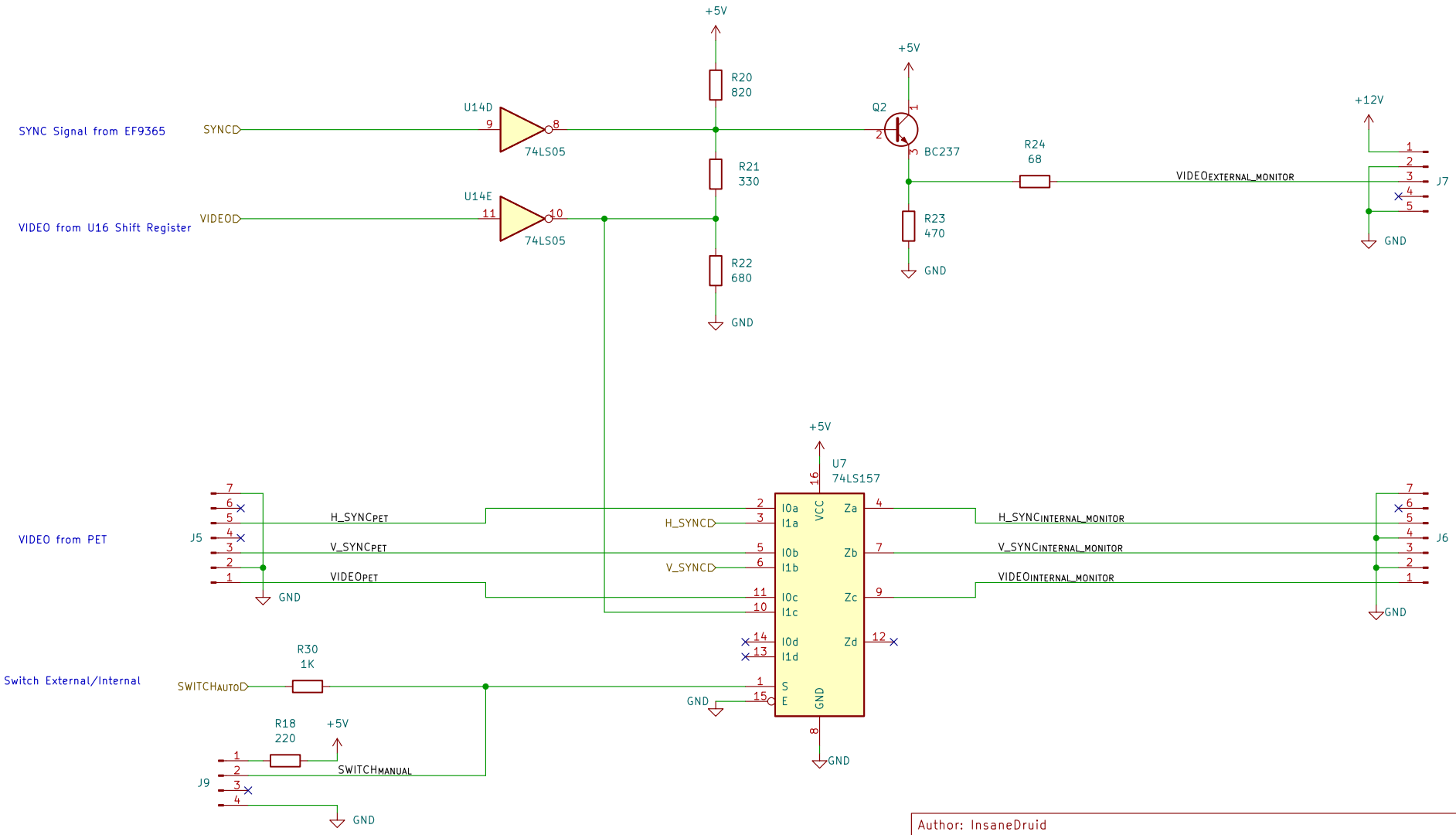

Author: InsaneDruid
License: CC BY 4.0
creativecommons.org/licenses/by/4.0/
reverse-engineered in 2022

Sheet: /VIDEO SWITCHING/
File: video_switch.kicad_sch

Title: LOW SPEED GRAPHIK

Size: A4	Date: 2022-03-13	Rev: V001
KiCad E.D.A. kicad (6.0.4)		Id: 9/10

LIGHT PEN

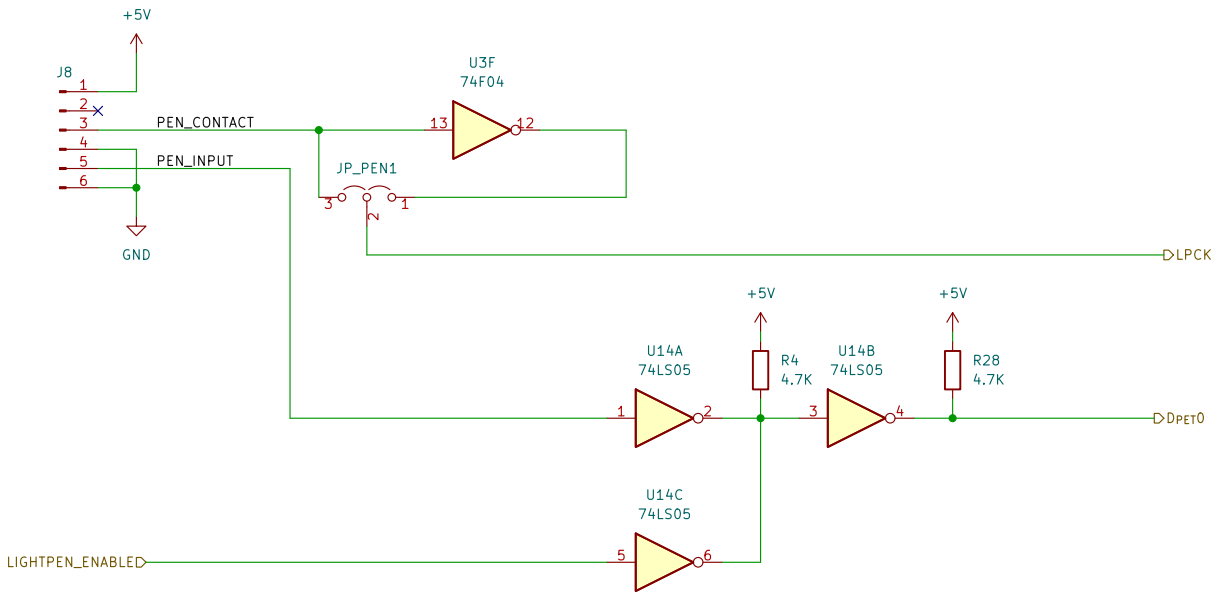

Author: InsaneDruid
License: CC BY 4.0
creativecommons.org/licenses/by/4.0/
reverse-engineered in 2022

Sheet: /LIGHT PEN/
File: light_pen.kicad_sch

Title: LOW SPEED GRAPHIK

Size: A4	Date: 2022-03-13	**Rev: V001**
KiCad E.D.A. kicad (6.0.4)		Id: 10/10