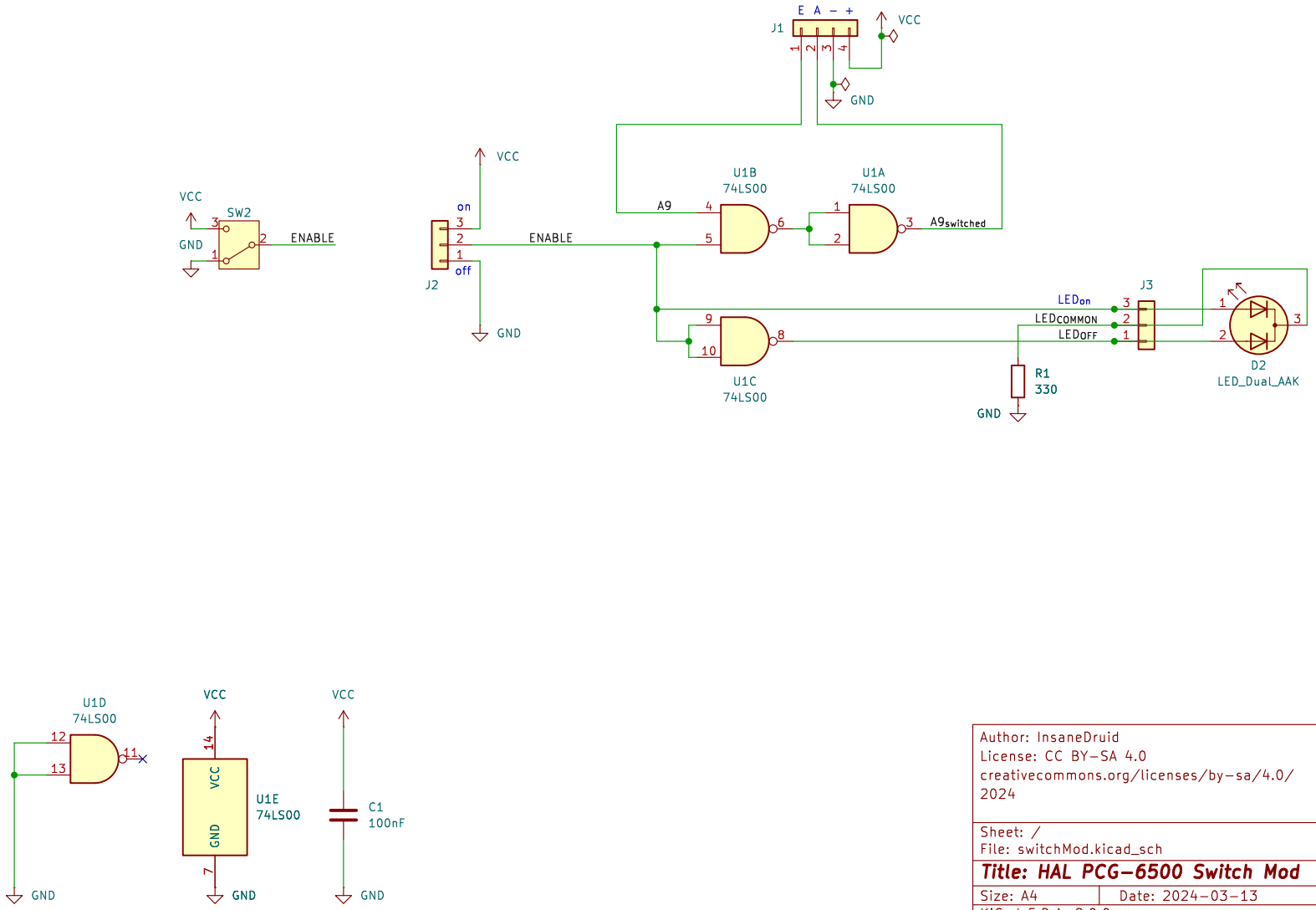

Author: InsaneDruid
License: CC BY-SA 4.0
creativecommons.org/licenses/by-sa/4.0/
2024

Sheet: /
File: switchMod.kicad_sch

Title: HAL PCG-6500 Switch Mod

Size: A4	Date: 2024-03-13	Rev: A
KiCad E.D.A. 8.0.0		Id: 1/1