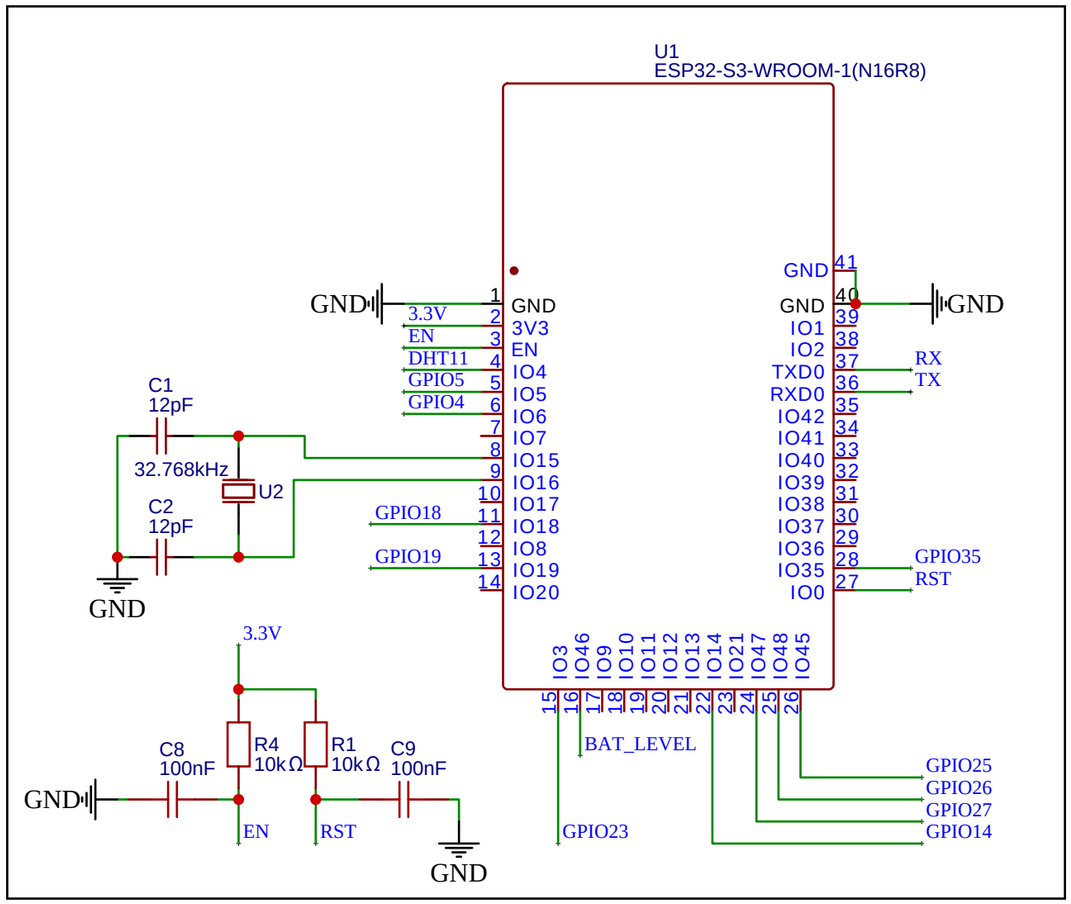

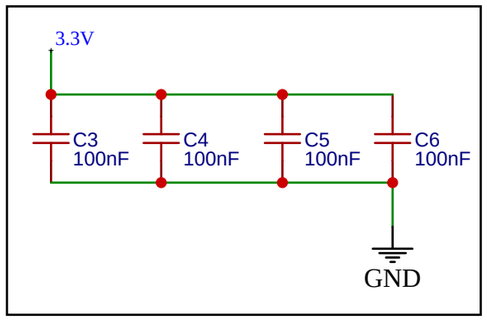

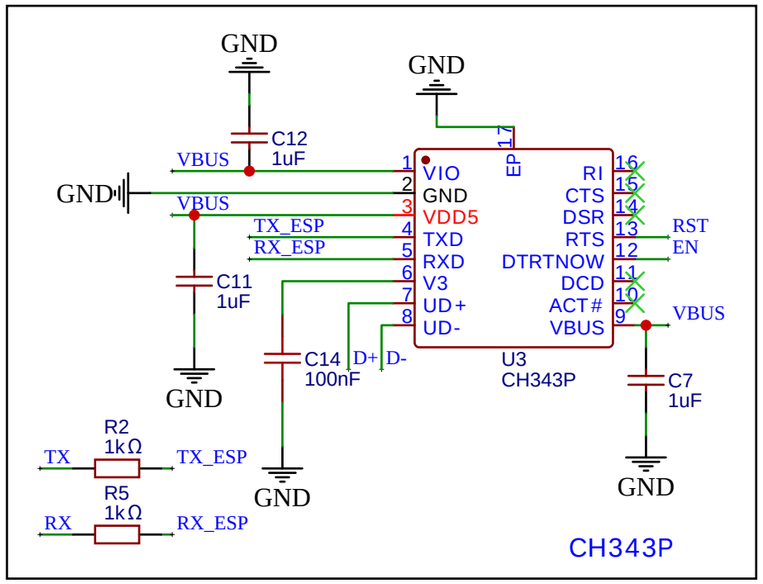

TITLE: Sheet_1

REV: 1.0

Company: Your Company

Sheet: 1/1

Date: 2024-11-11

Drawn By: dean_kovacs

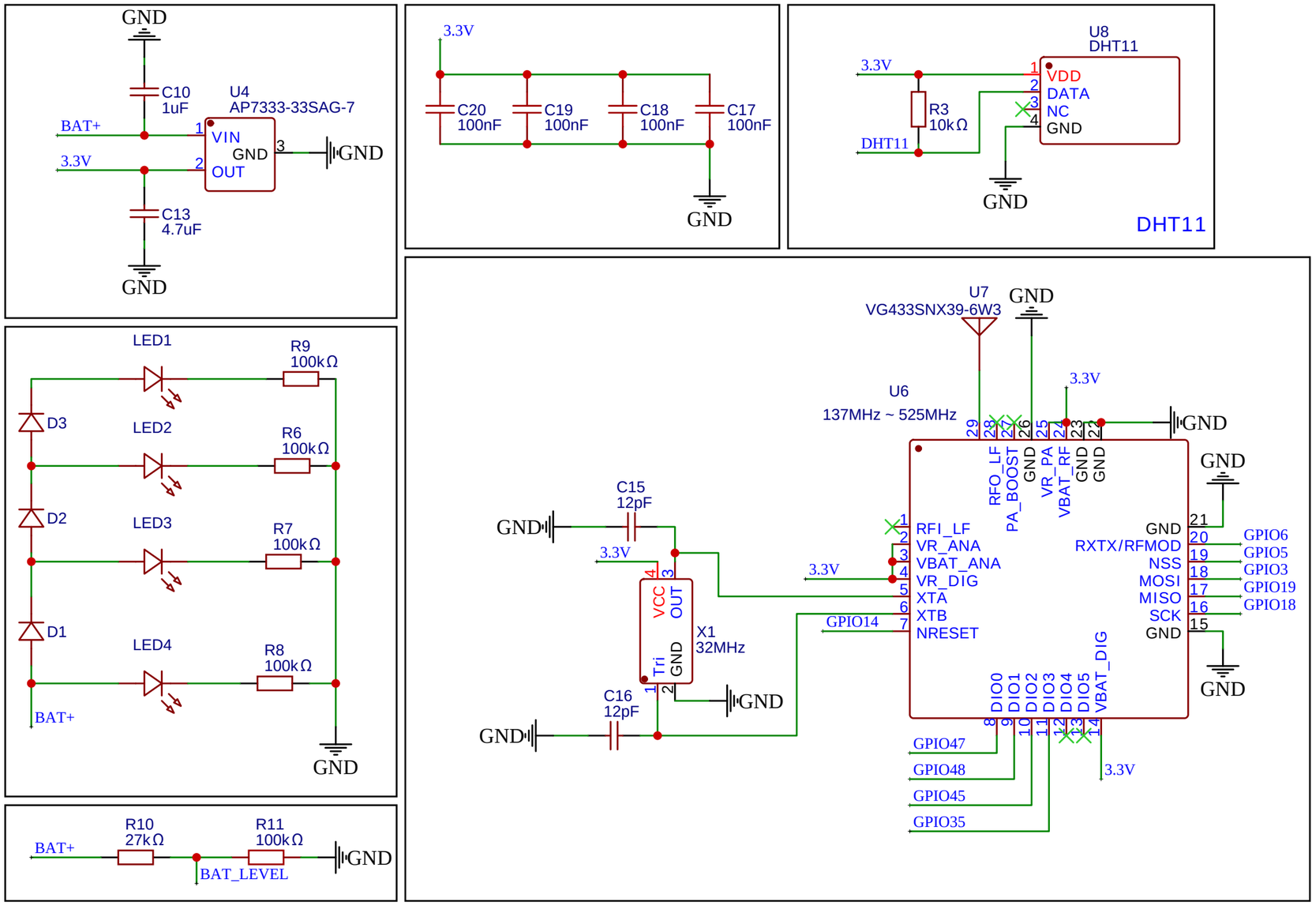

TITLE: Sheet_2	REV: 1.0
Company: Your Company	Sheet: 1/1
Date: 2024-11-11 Drawn By: dean_kovacs	

EasyEDA

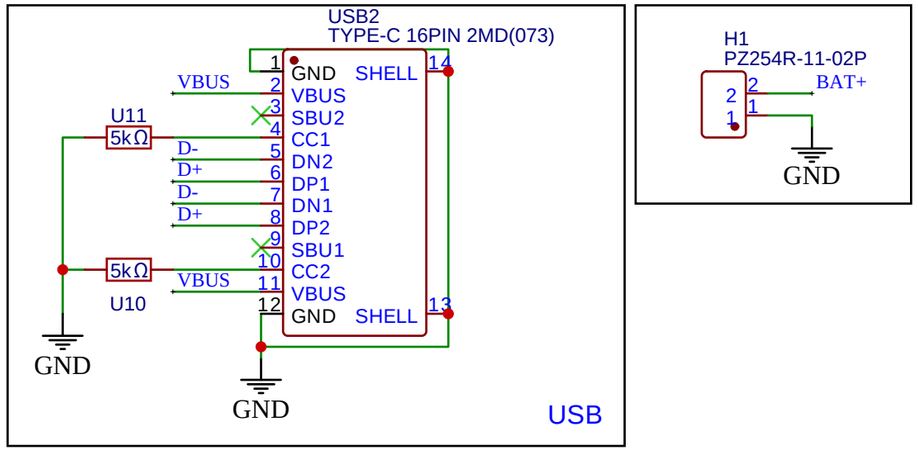

TITLE: Sheet_1		REV: 1.0
EasyEDA	Company: Your Company	Sheet: 1/1
	Date: 2024-11-11 Drawn By: dean_kovacs	