SAI

شركة ساي للدعاية والاعلان ذ.م.م

PUBLICITY &
ADVERTISING COMPANY W.L.L

DESIGN | PRINT | SIGNAGE
| GIFT ITEMS | MUCH MORE.....

Flat/Shop No. 0, Building 67, Road/Street 402
Al Qaryah, Block 604, Bahrain
Mobile : +973 396 10 953
Email : saiadvertising.bh@gmail.com, sales.saiadvertising@gmail.com

INDEX

PAGE

- Our Vision & Mission..... 3
- Our Specialities..... 4
- 3D Illuminated & Non-Illuminated Signages..... 5
- Digital Printing..... 6
- Illuminated and Non-Illuminated Flex Sign..... 7
- Traffic/Safety Sign Boards..... 8
- Screen Printing/ Embroidery/Heat Transfer..... 9
- Events & Exhibition..... 10
- Vehicle Branding, Wall Stickers & Meeting Stand..... 11
- Acrylic Works..... 12
- Stainless Steel/Brass/Aluminium Chemical Etching..... 13
- Traffolyte Lazer Engraving Tags..... 14
- Solar Traffic Diverter..... 15
- Variable Message Sign (VMS)..... 16
- Temporary Construction Sinages..... 17
- Project Construction Site Sign Board..... 18
- Our Major Clients..... 19
- Our Major Clients..... 20

Sai Publicity & Advertising Co. W.L.L Is Established With Vision & Mission To Focus On Growing Market To Provide Customers With Desired & Satisfying Products & Services.

OUR SPECIALITIES:

SAI Advertising to cater the wide range of customer's signage and custom-made requirements;

S I have right type of facility to produce:

1. Graphic Designing, **2.** Fabrication - Metals and Plastics.
3. Cuffing - Water jet, Laser, Routers etc.
4. Welding - Steel and Aluminium, **5.** Painting - Spray
6. Printing - Digital Printing, Screen Printing, Heat Transfer etc.
7. Vinyl and Graphics - Computerized Plotter Cuffing & Mounting.
8. Etching and Engraving, **9.** Sign Repair, Servicing and Maintenance.

SAI as successfully installed wide range of signage products.

1. Flex Signs - Single / Double Sided.
2. 3D Box Type Leiter Signs - Frontlit , Backlit, Front and Backlit.
3. Illuminated Acrylic Edgelit Signs, **4.** Non-Illuminated Cut Leiter Signs.
5. Custom-Made Acrylic Products - Stands, Boxes, Holders etc.
6. Digital Printing - Banners, Roll-Up, Pop-Up Stand etc.
7. Plotter Cut Graphics on any Surface.
8. Vehicle Branding.
9. Aluminium High Intensity Reflective Traffic and Informative Signs (Aluminium Post as well as foldable stand).
10. SS Etching, Aluminium, Plastic Engraving and Screen Printing Signs.
11. Name Badges (SS, Brass, with / without epoxy coating} Anodized Aluminium, engraving Sheets).
12. Gifts and Promotional Items.
13. Printing, Embroidery and Heat Transfer on T-Shirts, Caps, Boiler Suits, Uniforms etc.
14. Event and Exhibition Backdrops.
15. Traffic Cones, Barriers, Warning Tapes etc.

3D ILLUMINATED & NON-ILLUMINATED SIGNAGE

- NEON / LED ILLUMINATED
- 3D ACRYLIC SIGNAGE
- 3D ALUMINIUM SIGNAGE
- 3D BRASS SIGNAGE
- 3D STAINLESS STEEL SIGNAGE
- ILLUMINATED ACRYLIC EDGELIT SIGNAGE

DIGITAL PRINTING

- FLAT BED PRINTING ON ALUMINIUM, GLASS, ACRYLIC, STAINLESS STEEL, PLYWOOD

▶ FLEX	▶ VINYL PRINT	▶ TRUSS SYSTEM
▶ ROLL-UP	▶ FOAM BOARD	▶ STAGE BACKDROP
▶ POP-UP STAND	▶ VEHICLE BRANDING	▶ AND MUCH MORE...

ILLUMINATED & NON-ILLUMINATED FLEX SIGN

- DIGITAL PRINTED BACKLIT FLEX FACE SIGNBOARD
- VINYL GRAPHICS BACKLIT FLEX FACE SIGNBOARD
- FLUORESCENT LIGHTS / LED TUBE LIGHT ILLUMINATION
- FRONTLIT FLEX WITH METAL FRAME (NON-ILLUMINATED)

TRAFFIC / SAFETY SIGN BOARDS

- HIGH INTENSITY HONEYCOMB REFLECTIVE SIGN BOARDS
- ENGINEERING GRADE REFLECTIVE SIGN BOARDS
- INDUSTRIAL SAFETY SIGN BOARDS
- ROAD SAFETY SIGN BOARDS
- INFORMATIVE SAFETY SIGN BOARDS

SCREEN PRINTING / GIFT ITEMS / EMBROIDERY / HEAT TRANSFER

- SUNSHADE
- CAPS
- T-SHIRTS
- MUGS
- EPOXY NAME BADGES
- PIN BADGES
- GIFT ITEMS
- USB
- ID CARD LANYARDS AND
- MUCH MORE...

EVENTS & EXHIBITION

- STANDS
- MAGNETIC POP-UP STANDS
- EVENT BACKDROPS
- DISPLAYS
- EVENT STAGE DESIGN
- PODIUMS AND MUCH MORE...

Vehicle Branding, Wall Stickers & **Meeting Stand**

SAI
شركة ساي للدعاية والاعلان ذ.م.م
PUBLICITY &
ADVERTISING COMPANY W.L.L

Doing all kind of Acrylic works

شركة ساي للدعاية والاعلان ذ.م.م

SAI PUBLICITY & ADVERTISING COMPANY W.L.L

Stainless Steel/Brass/Aluminium Chemical **Etching**

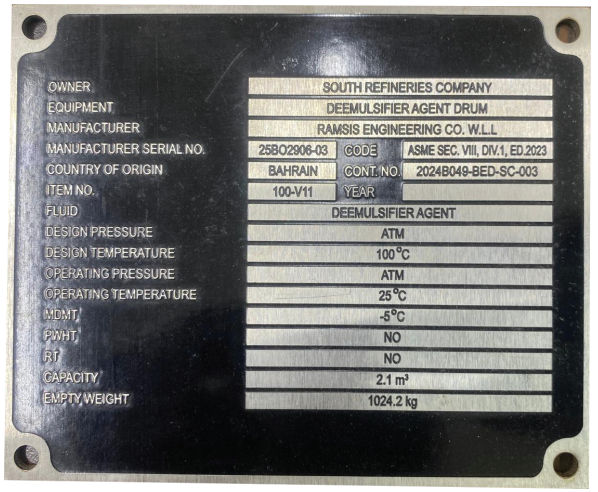

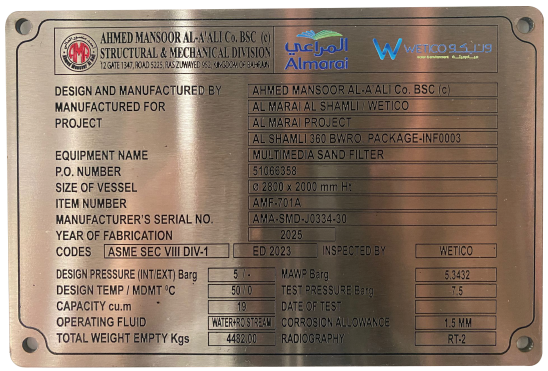

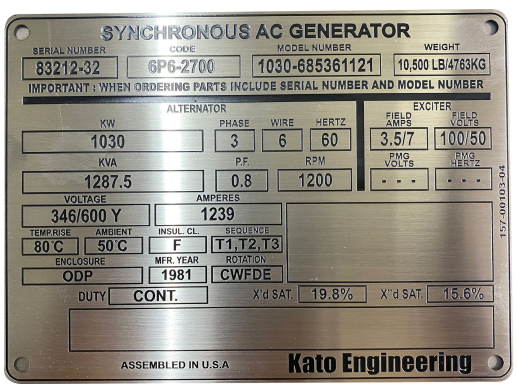

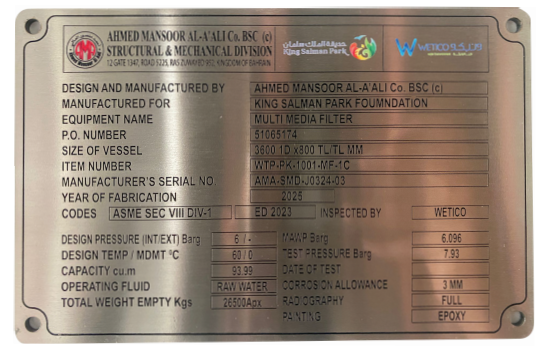

شركة ساي للدعاية والاعلان ذ.م.م
PUBLICITY & ADVERTISING COMPANY W.L.L

Traffolyte Lazer Engraving **Tags**

شركة ساي للدعاية والاعلان ذ.م.م
PUBLICITY &
ADVERTISING COMPANY W.L.L

Solar Traffic **Diverter**

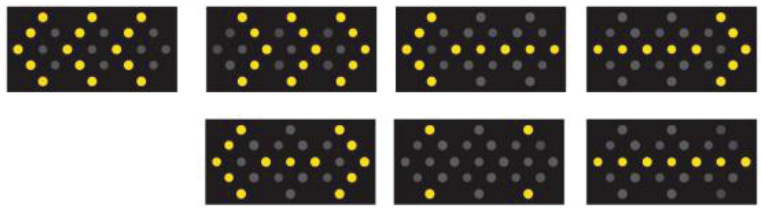

شركة ساي للدعاية والاعلان ذ.م.م
PUBLICITY & ADVERTISING COMPANY W.L.L

Variable Message Sign(**VMS**)

Travel Position

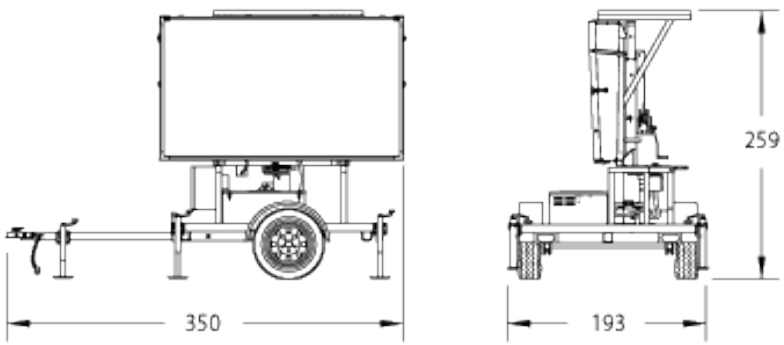

Deployed

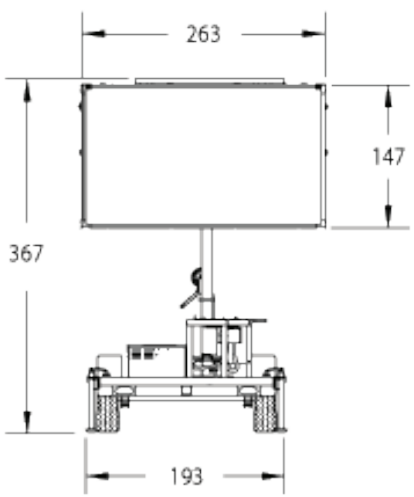

شركة ساي للدعاية والاعلان ذ.م.م
PUBLICITY & ADVERTISING COMPANY W.L.L

Temporary Construction **SINAGES**

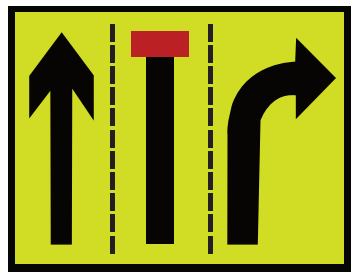

شركة ساي للدعاية والاعلان ذ.م.م
PUBLICITY & ADVERTISING COMPANY W.L.L

Project Construction Site **Sign Board**

شركة ساي للدعاية والاعلان ذ.م.م
SAI PUBLICITY & ADVERTISING COMPANY W.L.L

Our Major Clients

- إدارة الأوقاف السنية — SUNNI WAQF DIRECTORATE
- وزارة العمل والتنمية الاجتماعية — Ministry of Labour and Social Development
- المجلس الأعلى للبيئة — Supreme Council for Environment
- وزارة شؤون الشباب والرياضة — Ministry of Youth and Sport Affairs
- Arabian Gulf University
- Cebarco KAR
- Comsip
- المؤيد للكهرباء وأجهزة القياس وأنظمتها — ALMOAYYED ELECTRICAL AND INSTRUMENTATION SYSTEMS
- SIEMENS
- RAFCO
- المملكة — THE KINGDOM
- K.T.C — KHAYBER TRADING COMPANY W.L.L
- شركة فولت أمب للوحات الكهربائية ذ.م.م. — VOLTAMP SWITCHGEAR CO. W.L.L.
- ناس NASS CORPORATION المؤسسة
- UNEECO العالمية للهندسة الكهربائية — Universal Electro-Engineering
- المؤيد للتكييف — Almoayyed Air Conditioning
- KARTEC كارتك — Electro-Mechanical Company
- BR baskin robbins
- Alghanim International General Trading and Contracting Co.
- mcsc
- مراسي البحرين — MARASSI AL BAHRAIN
- أصغر علي asgharali
- centrepoint — Mothercare Splash Shoe Mart Lifestyle
- TBEA 特变电工
- Boskalis — Boskalis Westminster Al-Rushaid – Boskalis Westminster Contracting JV

شركة ساي للدعاية والاعلان ذ.م.م
SAI PUBLICITY & ADVERTISING COMPANY W.L.L

Our Major Clients

- Hitachi Energy
- ALKOOHEJI ELECTRICAL CONTRACTORS & CONSTRUCTION W.L.L. مقاولات الكوهجي للكهرباء والإنشاء ذ.م.م
- AL AHLIA CONTRACTING CO. الشركة الأهلية للمقاولات
- Ahmed Mansoor Al Aali
- aic
- ميدال للكابلات Midal Cables
- Ramsis Engineering
- الكابلات السعودية Saudi Cable
- BAHRAIN STS
- RAY INTERNATIONAL GROUP
- POULLAIDES CONSTRUCTION COMPANY CIVIL ENGINEERING & BUILDING CONTRACTORS
- RELAY ENGINEERING
- EAMCO
- LS Cable & System
- Petrofac
- bni البحرين الوطنية للتأمين Bahrain National Insurance
- al ghalia
- N.C.C.
- Alkomed ENGINEERING SERVICES CO. W.L.L. الكومد للخدمات الهندسية ذ.م.م
- HALLIBURTON
- BEMCO
- مجموعة بوخوه ذ.م.م BOKHOWA GROUP W.L.L. مقاولات . تجارة . عقارات CONTRACTING • TRADING • REAL ESTATE
- UGA
- CROWN ELECTRO - MECHANICAL SERVICES