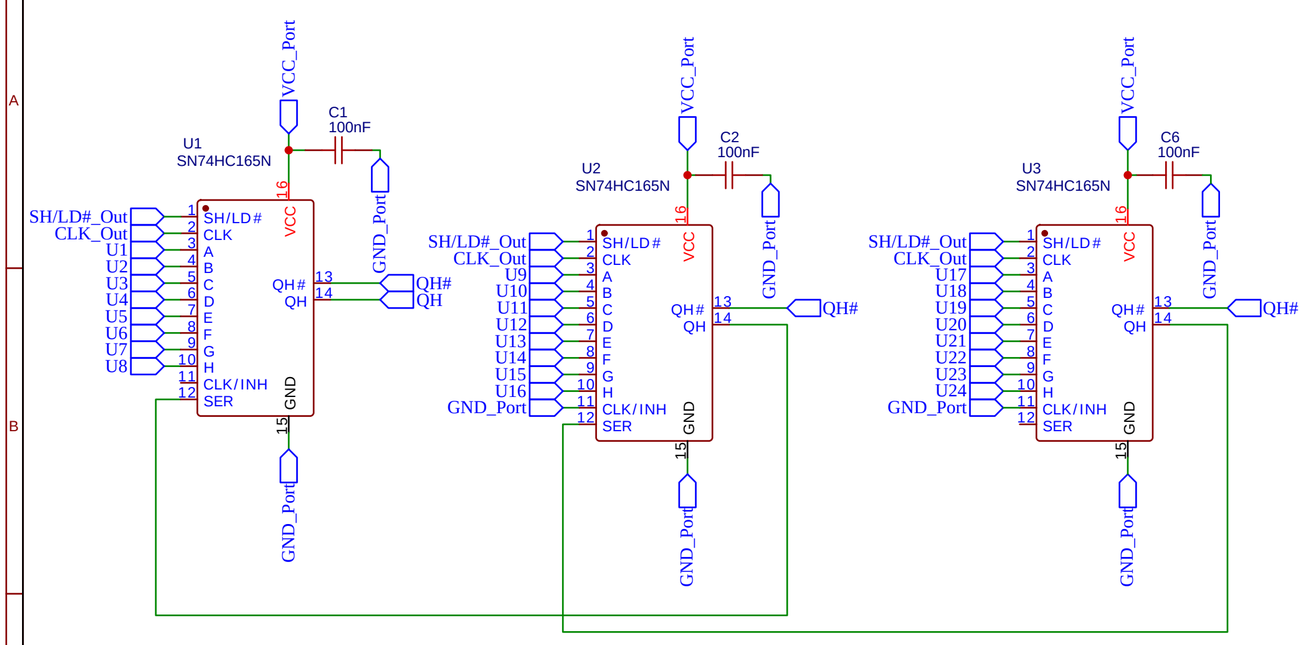

箇屏伏膃篋ы

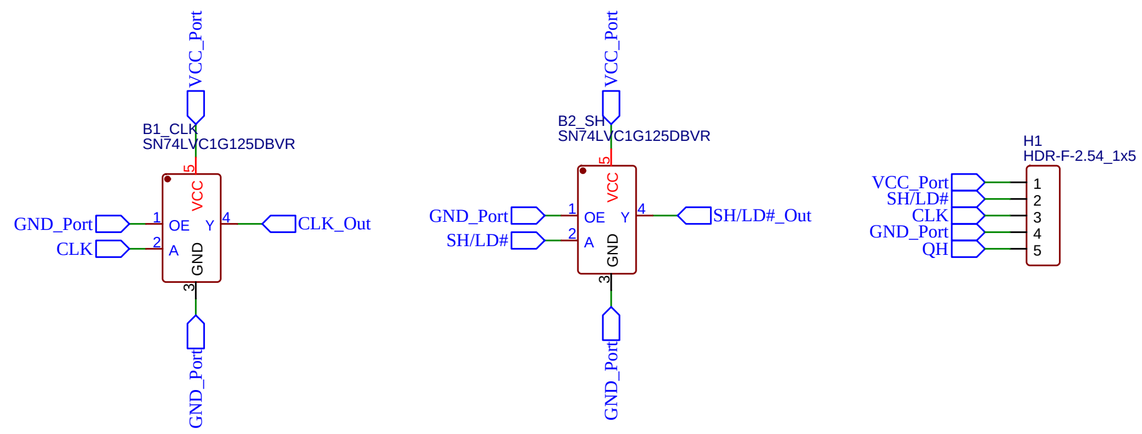

禡缽膜胎颱 + 翎澸　胎朦吹腧 繃孢 и 聜辈膜骋菘　翎伀 с 屹

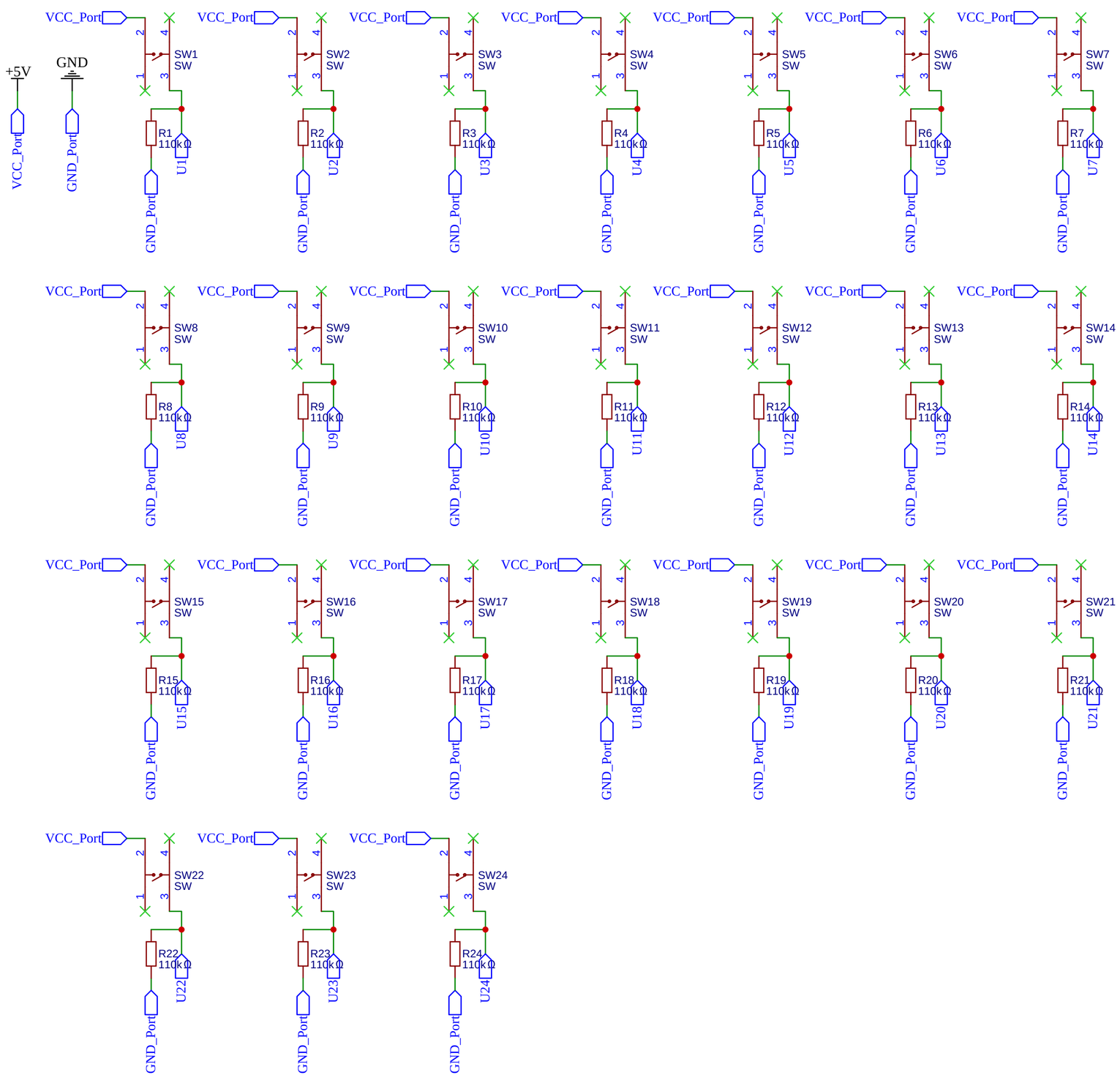

穿澎　耦蛊

TITLE: Buttons		REV: 1.0
EasyEDA	Company: Danik Music Inc.	Sheet: 2/2
	Date: 03.07.2024 Drawn By: danik_mus	