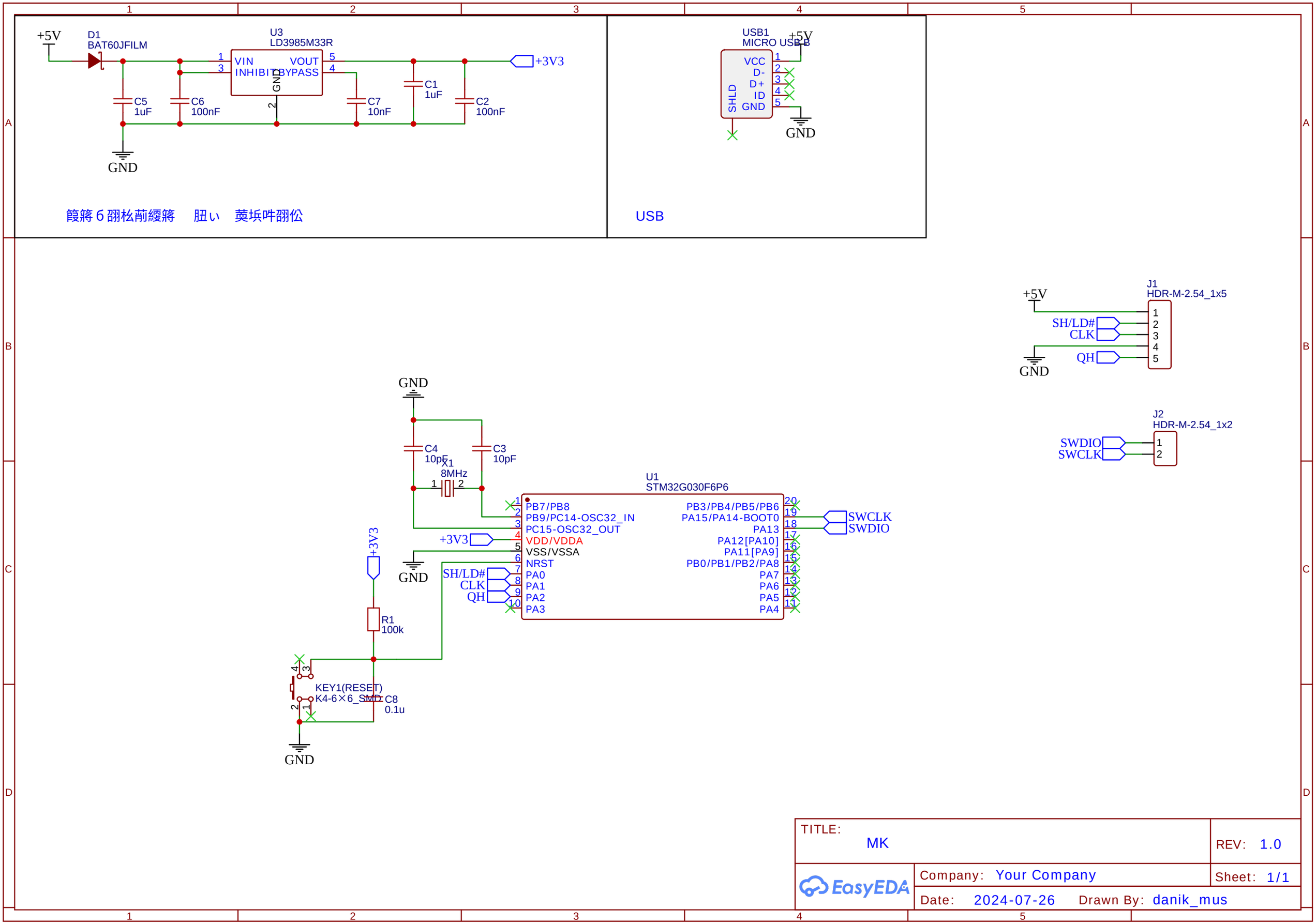
+5V
D1
BAT60JFILM
U3
LD3985M33R
VIN
INHIBIT
GND
VOUT
BYPASS
+3V3
C5
1uF
C6
100nF
C7
10nF
C1
1uF
C2
100nF
GND
USB1
MICRO USB-B
VCC
D-
D+
ID
GND
SHLD
+5V
GND
USB
J1
HDR-M-2.54_1x5
+5V
SH/LD#
CLK
QH
GND
J2
HDR-M-2.54_1x2
SWDIO
SWCLK
GND
C4
10pF
C3
10pF
X1
8MHz
U1
STM32G030F6P6
PB7/PB8
PB9/PC14-OSC32_IN
PC15-OSC32_OUT
VDD/VDDA
VSS/VSSA
NRST
PA0
PA1
PA2
PA3
PB3/PB4/PB5/PB6
PA15/PA14-BOOT0
PA13
PA12[PA10]
PA11[PA9]
PB0/PB1/PB2/PA8
PA7
PA6
PA5
PA4
SWCLK
SWDIO
+3V3
GND
SH/LD#
CLK
QH
+3V3
R1
100k
KEY1(RESET)
K4-6×6_SMD
C8
0.1u
GND
TITLE:
MK
REV: 1.0
EasyEDA
Company: Your Company
Sheet: 1/1
Date: 2024-07-26
Drawn By: danik_mus