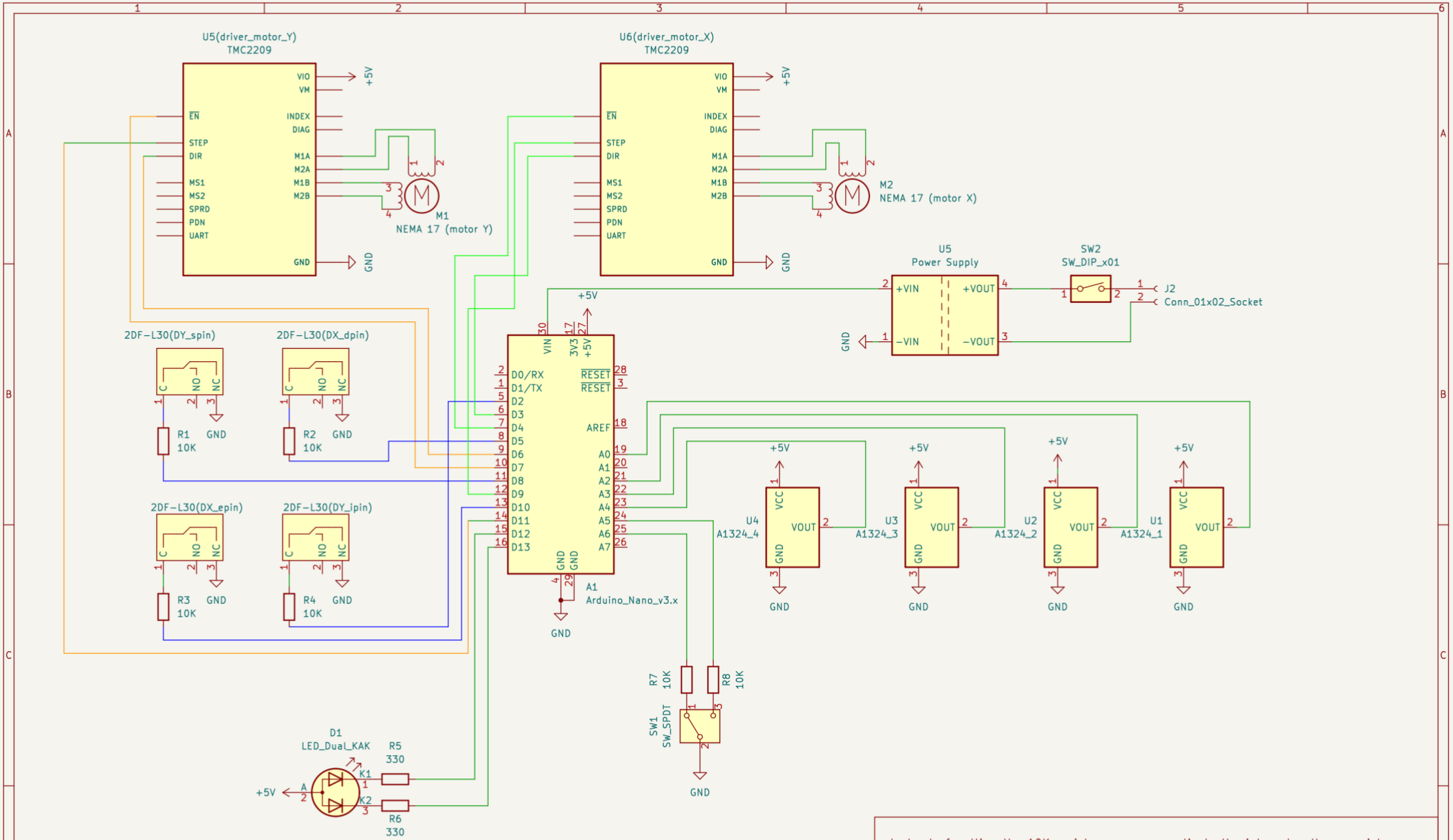

• Instead of putting the 10K resistors, you can activate the internal pull-up resistors of the arduino nano
• The motor used is a Nema 17

Sheet: /
File: Electronic Blueprint Anti_Puzzle.kicad_sch

Title: ANTI PUZZLE

Size: A4	Date: 2024-03-18	Rev:
KiCad E.D.A. eeschema 7.0.10		Id: 1/1