Rosette Lock – Sleek & Modern Security

A stylish locking solution featuring a minimal, compact design. Rosette locks offer smooth operation, reliable security, and a clean finish—perfect for contemporary interiors in both homes and offices.

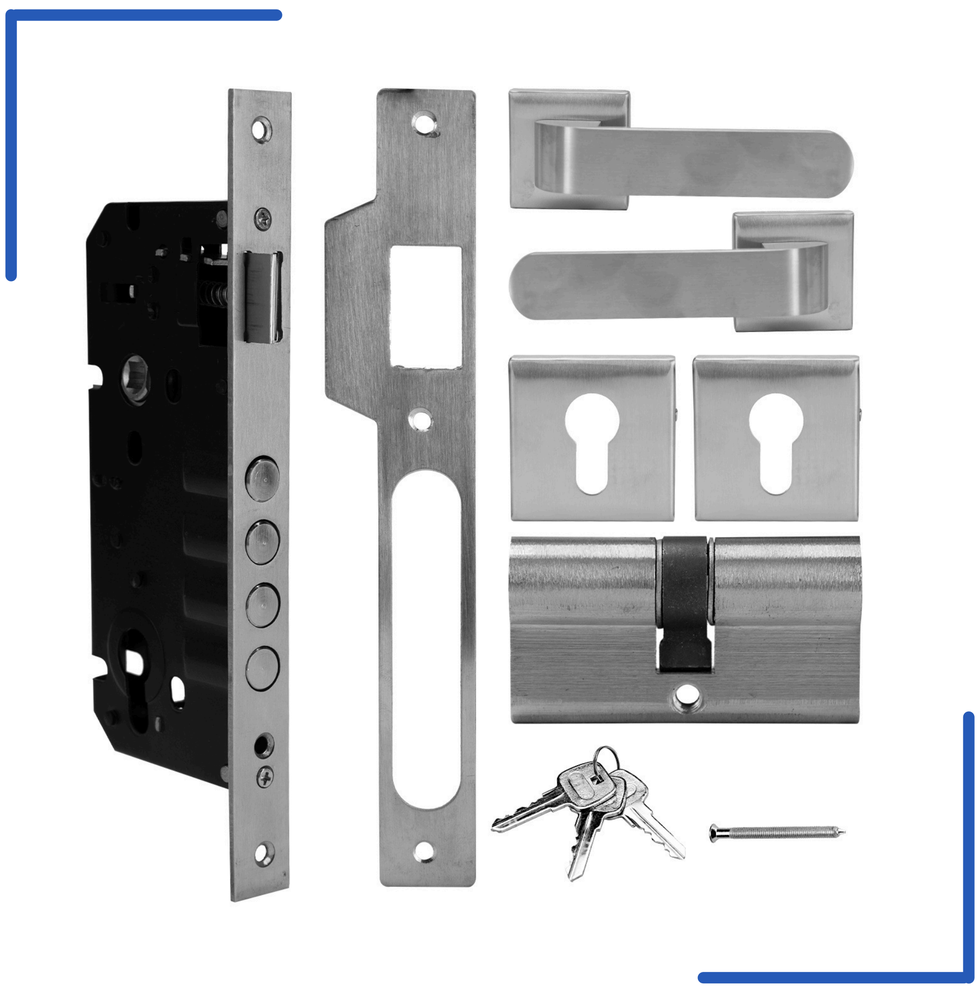

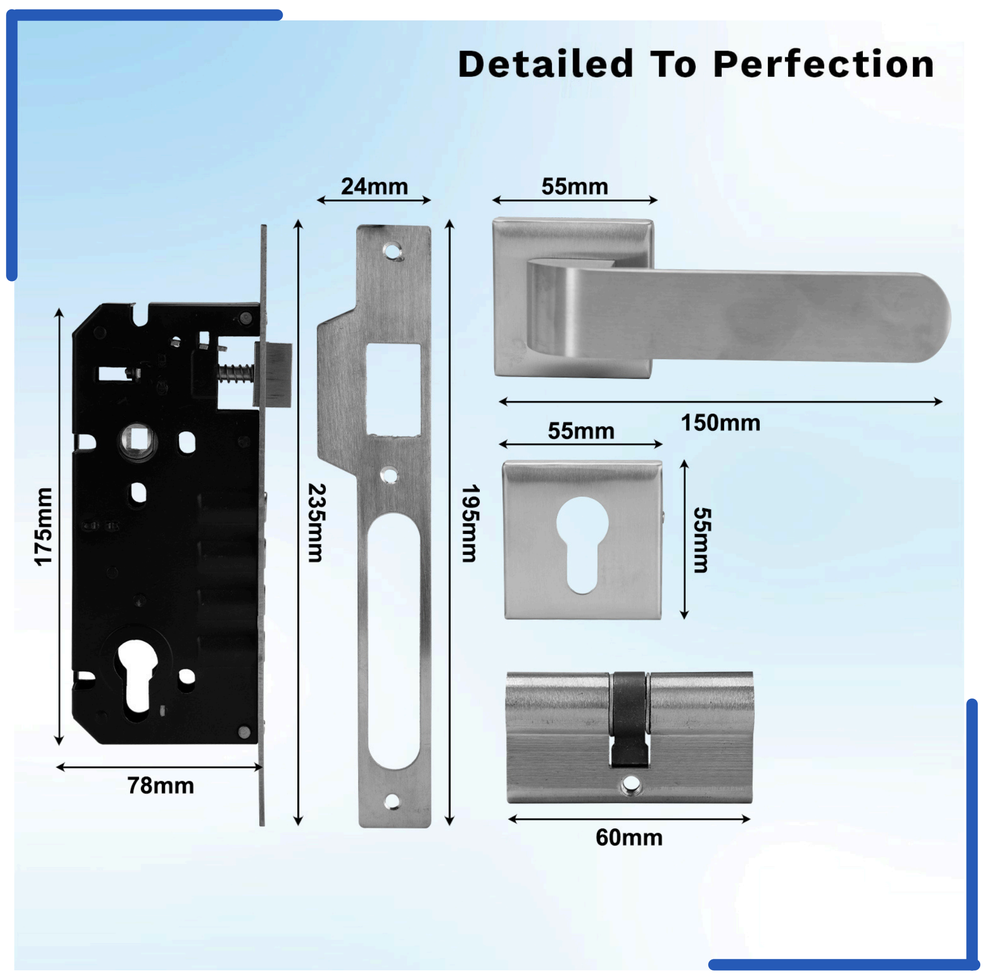

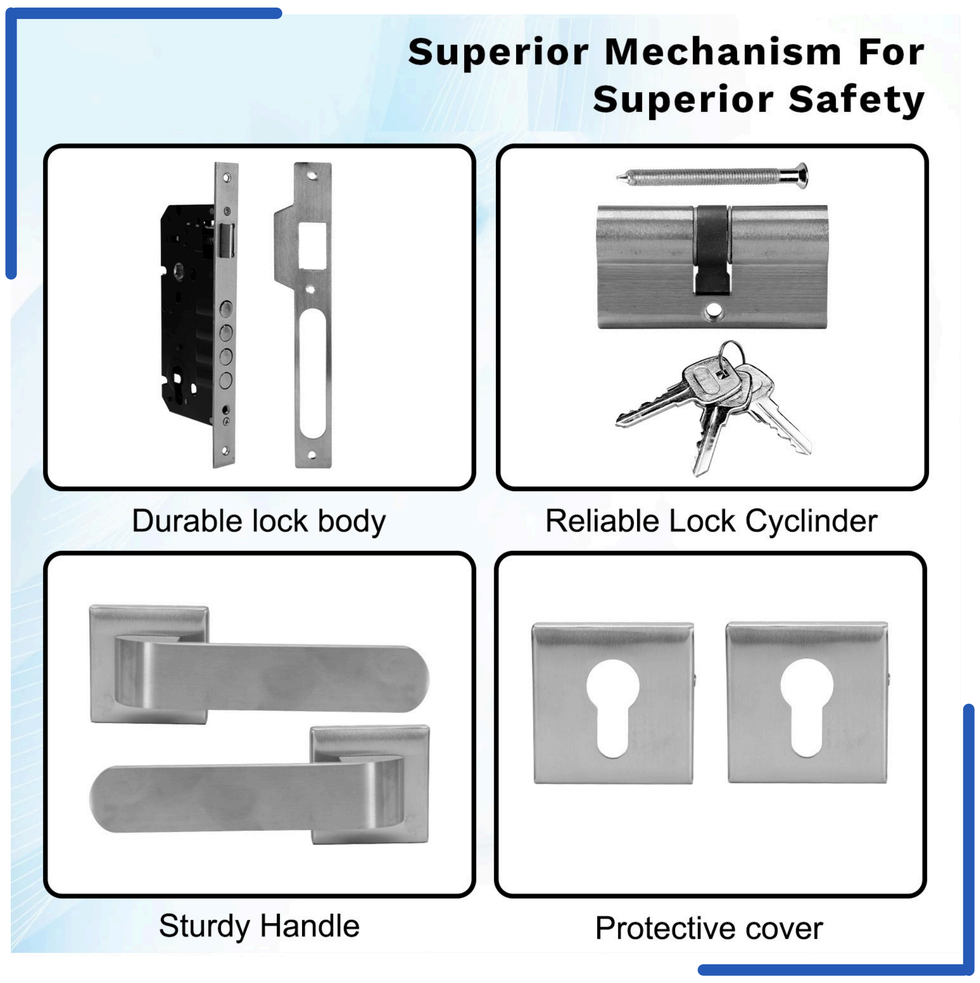

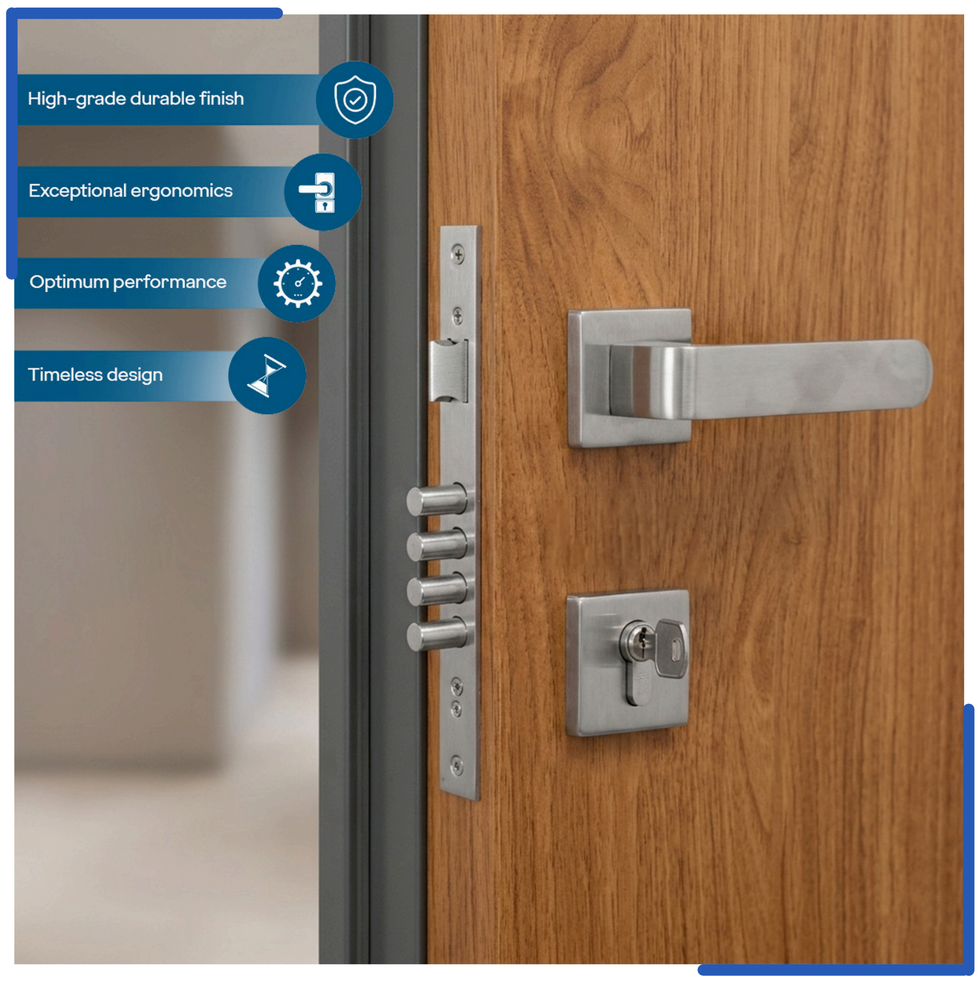

Rosette Lock – Sleek & Modern Security

Parameters	Specifications
Model	RML-02
Material	Steel / SS / Brass
Finish	Black / Satin / Antique / Rose Gold / Gold
Cylinder size	60mm / 70mm / 80mm
Variant	1CK / 2CK*

*1CK – One side key one side knob / 2CK – Both side key

Key Features

- High security locking mechanism
- Strong, durable steel construction
- Anti-force / anti-prying protection
- Smooth key & handle operation

Application

- Residential Doors
- Commercial Doors
- Hotel Rooms

Ordering Information

- For bulk Orders or more Information, Visit our page