Pin Cylinder – Simple & Secure Mechanism

A reliable locking component designed for smooth key operation and basic security. Pin cylinders ensure consistent performance and are ideal for everyday residential, light and heavy commercial use.

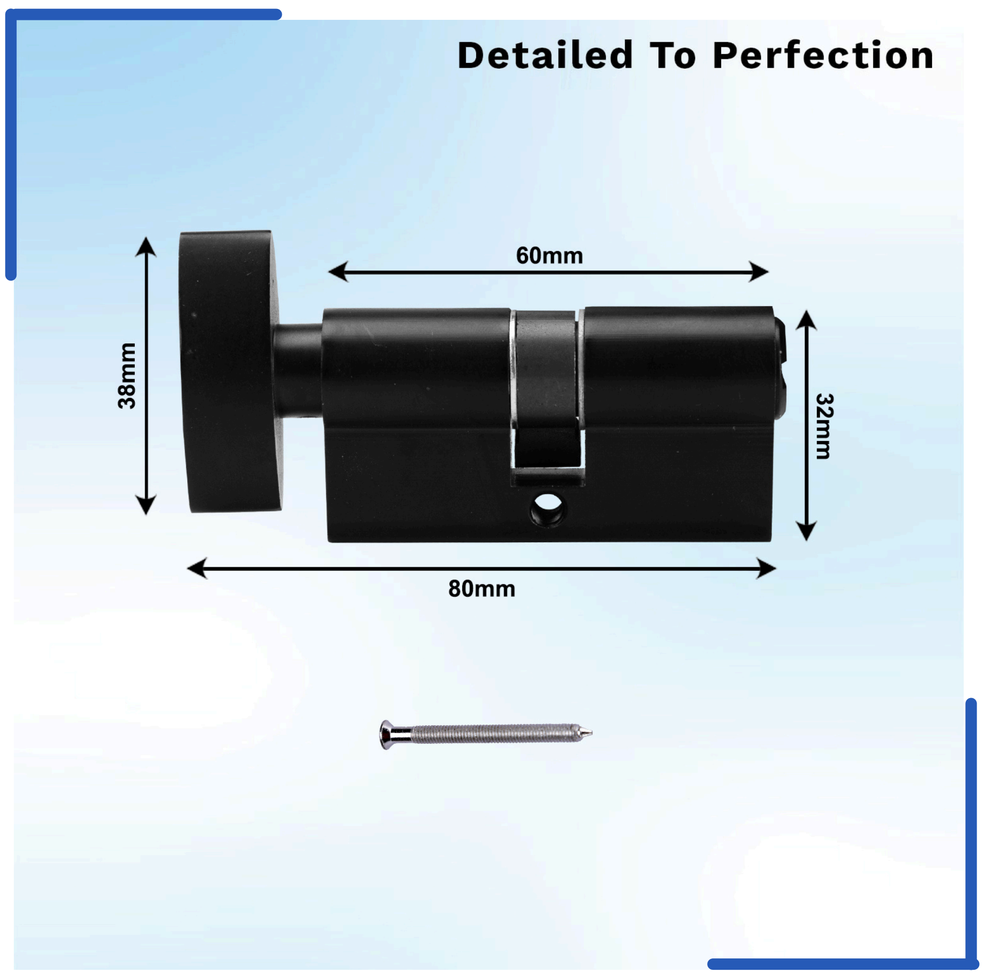

Pin Cylinder – Simple & Secure Mechanism

Parameters	Specifications
Model	PINCY-02
Material	Brass
Finish	SS Finish / Antique / Brass / Black
Size	60 / 70 / 80 / 90 & 100mm
Key Type	Regular / Dimple
Variant	1CK & 2CK

*1CK – One side key one side knob / 2CK – Both side key

Key Features

- Precision pin mechanism
- High security locking
- Durable metal build
- Smooth key operation

Application

- Mortise locks
- Rosette

Ordering Information

- For bulk Orders or more Information, Visit our page