Tower Bolt – Simple & Secure Fastening

A sturdy manual locking solution designed for quick and easy door fastening. Tower bolts provide reliable security and are ideal for doors, windows, and cabinets in both residential and commercial spaces.

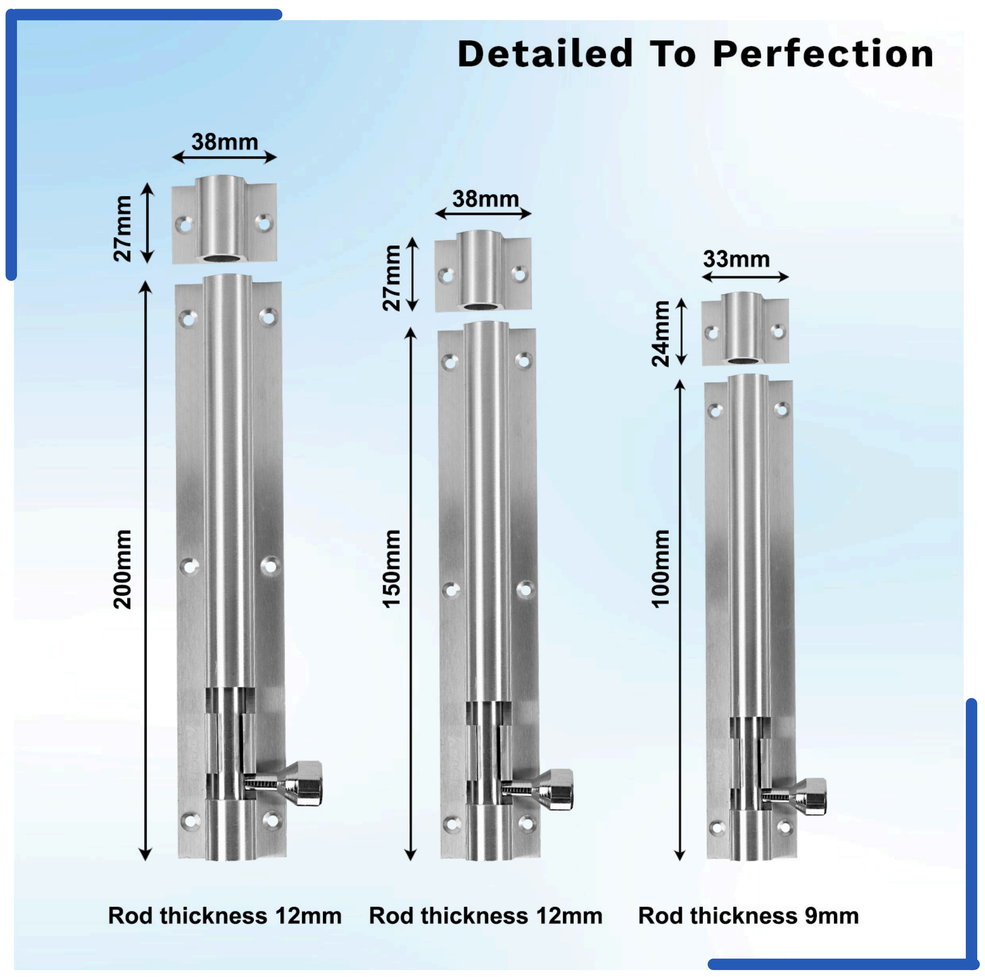

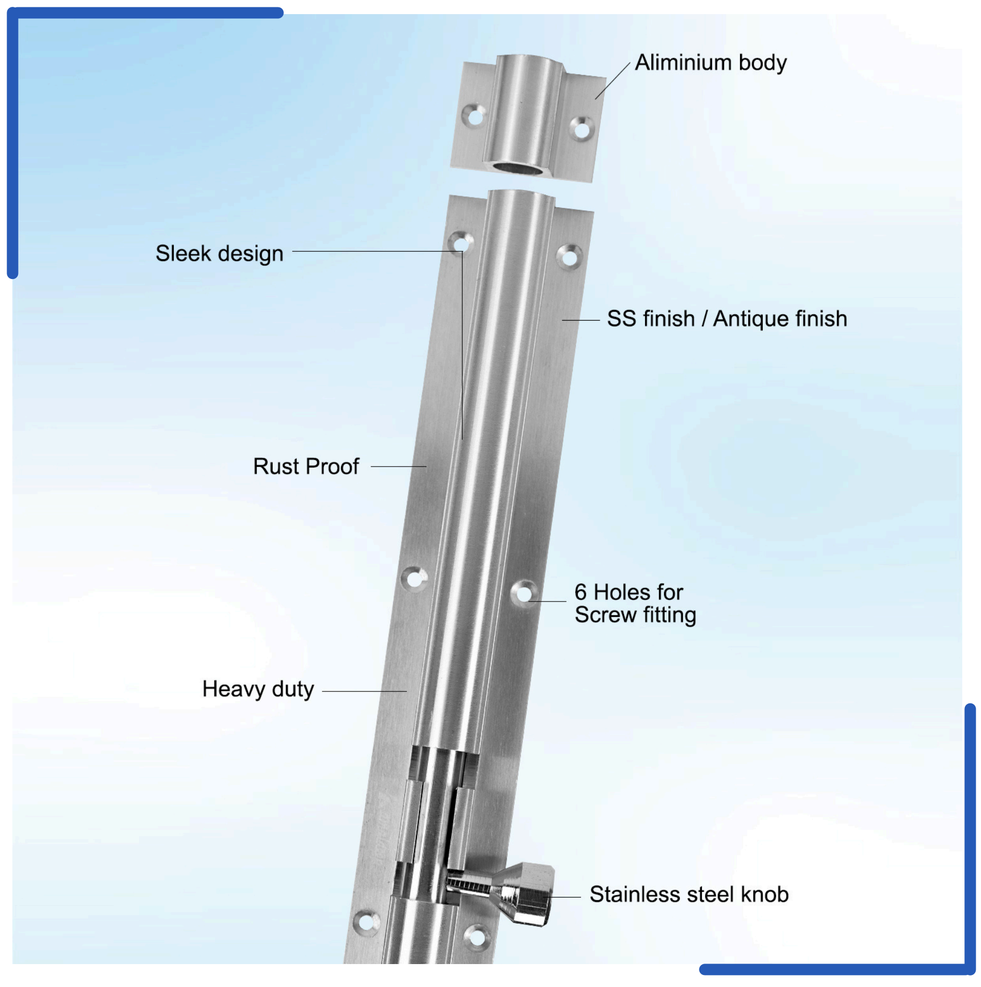

Tower Bolt – Simple & Secure Fastening

Parameters	Specifications
Model	TB-01
Material	Alu / Steel / SS / Brass
Finish	Black / Satin / Antique / Rose Gold / Gold
Sizes	75 – 600mm

Key Features

- Strong & sturdy construction
- Smooth sliding mechanism
- Corrosion-resistant finish
- Easy installation

Application

- Doors
- Windows
- Cabinets

Ordering Information

- For bulk Orders or more Information, Visit our page