Door Pull Handle – Sleek & Durable Grip

Designed for comfort and style, door pull handles offer a firm grip with a clean, modern look. Built for durability, they are ideal for both residential and commercial spaces.

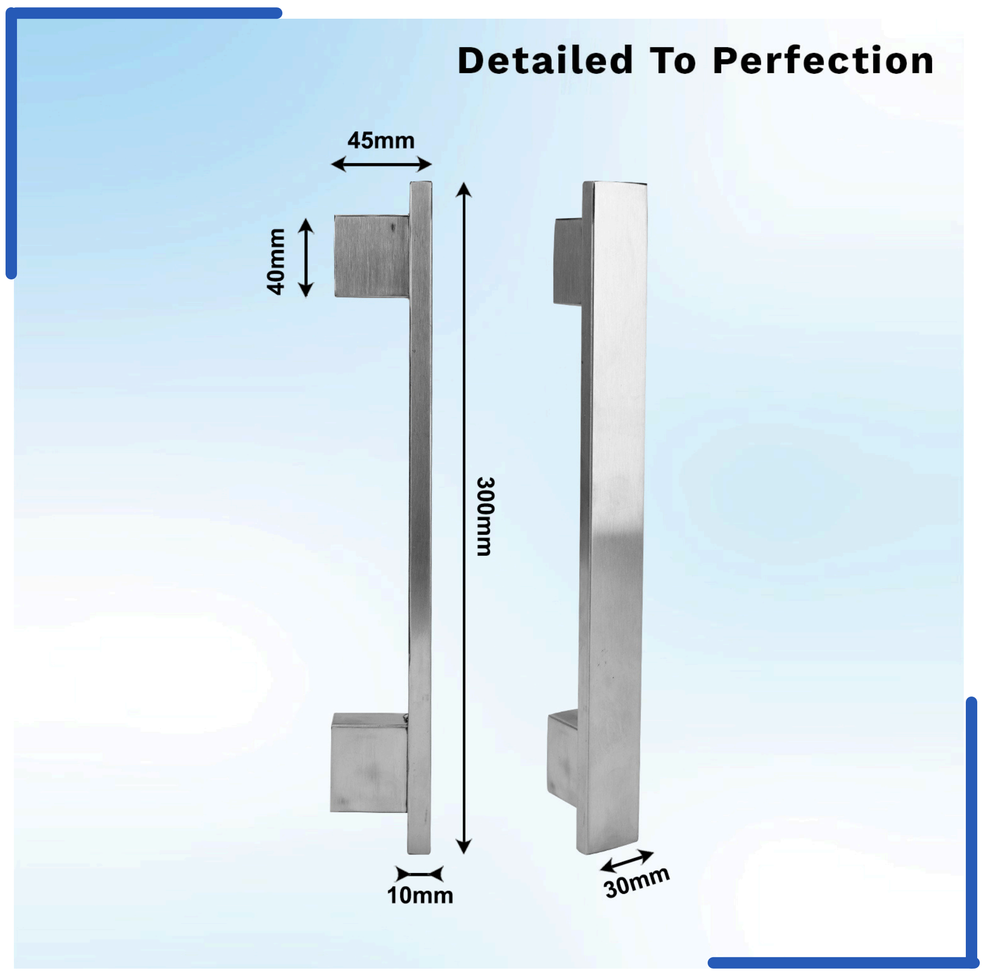

Door Pull Handle – Sleek & Durable Grip

Parameters	Specifications
Model	DPH-01
Material	Stainless Steel
Grade	SS202 / SS304
Finish	Satin Matt / Antique
Size	200, 300, 450, 600 & 900mm

Key Features

- Strong & durable build
- Ergonomic grip design
- Corrosion-resistant finish
- Modern & stylish look

Application

- Main Doors
- Commercial Doors & All types ofwooden doors

Ordering Information

- For bulk Orders or more Information, Visit our page