Dynamic Memory Interface MK 3852

FEATURES

- ☐ Provides interface for 64K of dyanmic or static RAM
- ☐ Interfaces with MK3854 for DMA channel
- ☐ Provides automatic refresh for dynamic RAMs.
- ☐ Low Power Dissipation Typically Less Than 335mW

GENERAL DESCRIPTION

The 3852 DMI provides all interface logic needed to include up to 64K bytes of dynamic or static RAM memory in an F8 microcomputer system. In response to control signals output by the 3850 CPU, the 3852 DMI generates address and control signals needed by standard static and dynamic RAM devices. The MK3852 DMI is manufactured using N-channel Isoplanar MOS technology.

FUNCTIONAL PIN DESCRIPTION

Φ and WRITE are clock outputs from the 3850 CPU.

ROMC0 through ROMC4 are the control signals output by the 3850 CPU.

PIN NAME	DESCRIPTION	TYPE
DB0-DB7	Data Bus Lines	Bi-directional(3-State)
ADDR0-ADDR15	Address Lines	Output (3-State)
Φ, WRITE	Clock LInes	Input
MEMIDLE	DMA Timing Line	Output
CYCLE REQ	RAM Timing Line	Output
CPU Slot	Timing Line	Input/Output
CPU READ	RAM Timing Line	Output
REGDR	Register Drive Line	Input/Output
RAM WRITE	Write Line	Output (3-State)
ROMC0-ROMC4	Control Lines	Input
V_{SS}, V_{DD}, V_{GG}	Power Lines	Input

SINGLE CHIP 3870 MICROCOMPUTER FAMILY

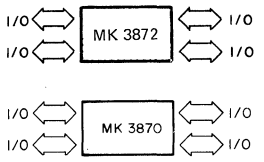

F8 FAMILY

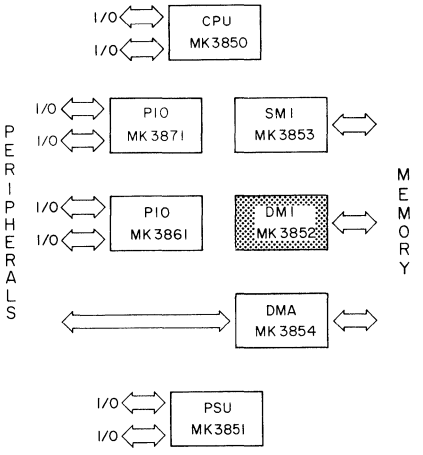

PIN CONNECTIONS

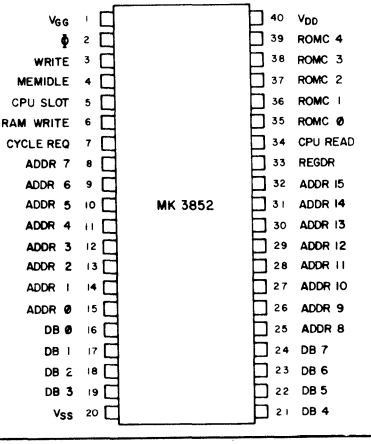

F8 Family

ADDR0 through ADDR15 are 16 address lines via which an address is transmitted to dyanmic RAM. The address may come from P0 or DC registers.

DB0 through DB7 are the bi-directional data bus lines which link the 3852 DMI with all other devices in the F8 system. Only data moving to or from 3852 DMI address registers and I/O ports use the 3852 DMI DB0-DB7 pins.

MEM IDLE high identifies portions of an instruction execution cycle during which the F8 system is not accessing memory, to read, write or refresh. MEM IDLE high therefore identifies the portion of an instruction cycle which is available for DMA operations. The 3852 DMI can inhibit DMA by holding MEM IDLE constantly low. The address drivers and RAM WRITE driver are always in a high impedance state when MEM IDLE is high, so that a DMA device may drive the address lines at this time.

RAM WRITE. When low, this signal specifies that data is to be written into RAM locations. When high, this signal is off; that is, RAM WRITE high does not necessarily specify a read operation.

CPU READ. When high, this signal specifies that data is to be read out of a RAM location. When low, this signal is off; that is, CPU READ low does not specify a write operation; that is done by RAM WRITE low.

REGDR. This signal functions both as an input and an output. As an input, it can be clamped low by an external open collector gate. This prevents the 3852 DMI from placing a byte out of its P or DC registers onto the data bus. The DMI internally supplies a pull-up resistor. The signal, functioning as an output, can control data bus buffers. The DMI will internally clamp REGDR low except during those ROMC states during which the DMI is required to place a byte out of P or DC registers or either of its two control registers (I/O ports) onto the data bus.

CYCLE REQ. There may be either two or three memory access periods within one instruction cycle. CYCLE REQ identifies each memory access period by making a high to low transition at the start of the memory access period. CYCLE REQ does not identify events which are to occur during the memory access period. CYCL REQ is a divide-by-2 of Φ during all ROMC states except ROMC state 05 (store in memory); it can be used to generate the clock signals required by many dynamic RAMs.

CPU SLOT high identifies portions of an instruction execution cycle during which the 3850 CPU is reading data out of RAM, or writing data into RAM. CPU SLOT is a bi-directional signal. If held low by external logic, it causes the address line drivers and RAM WRITE driver to be held in a high impedance state.

F8 Family

BLOCK DIAGRAM

Figure 1

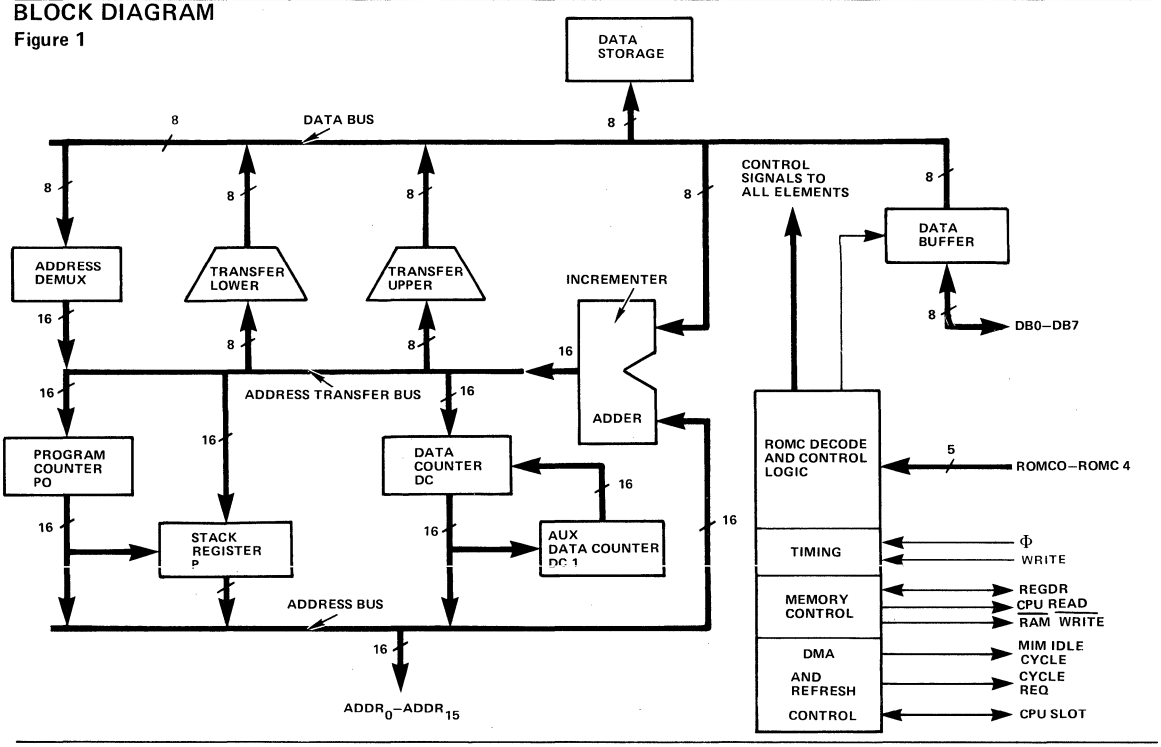

DEVICE ORGANIZATION

This section describes the basic functional elements of the MK3852 DMI. These elements are shown in the DMI functional block diagram (figure 1).

PROGRAM COUNTER (PO) AND DATA COUNTER (DC AND DC1)

The MK3852 DMI addressing logic consists of 3 16-bit registers, the Program Counter (PO) and the Data Counters (DC and DC1).

The Program Counter will at all times address the memory word from which the next object program code must be fetched. The Data Counter (DC) addresses memory words containing individual data bytes or bytes within data tables to be used as operands.

It is important to note that the 3852 DMI has an auxiliary Data Counter (DC1). The contents of DC can be saved in DC1 by using the instruction XDC (exchange data counters). This instruction puts the contents of DC into DC1 and the contents of DC1 into DC. DC⇄DC1.

PO will always address the memory location out of which the next object program instruction byte will be read. If the instruction requires data (an operand) other than an immediate to be accessed DC must address memory. PO cannot be used to address a NON-immediate operand since PO is saving the address of the next instruction code.

THE STACK REGISTER P

The MK3852 DMI addressing logic contains a fourth 16-bit register called the stack register (P). The stack register is a buffer for the program counter PO. The contents of the stack register are never used directly to address memory.

The following instructions access P

LR K, P	Move the contents of P to the CPU scratchpad K registers
LR P,K	Move the contents of the CPU K scratchpad registers to P
PK	Save the contents of PO in P then move the contents of CPU scratchpad registers 12 and 13 to PO
PI H'aaaa'	Move the contents of PO to P then load the hexadecimal value into PO
POP	Move the contents of P to PO

In addition, when an interrupt is acknowledged, the contents of PO are saved in P.

MEMORY CONTROLS

Memory Control logic generates appropriate timing and control signals needed by RAM to input or output data. Timing and control signals are generated in response to ROMC states, as decoded by the Control Unit.

INCREMENTER ADDER LOGIC

There are only two arithmetic operations that memory devices need to perform on the contents of memory address registers:

1. Increment by 1 the 16-bit value stored in an address register.

2. Add an 8-bit value, treated as a signed binary number (subject to twos complemented arithmetic) to the 16-bit value stored in address register.

The incrementer adder logic performs these two functions in the MK3852 DMI.

THE DATA BUS

The 8-bit data bus is the main path for transfer of information between the MK3850 CPU and other devices in the F8 microprocessor system.

ADDRESSABLE I/O PORTS

The 3852 DMI has four I/O port addresses reserved for its use. There are two versions of the 3852 DMI; one has I/O port addresses 0C, 0D, 0E and 0F for its four I/O ports; since these addresses are also used by the 3853 SMI, another version of the 3852 DMI uses I/O port address EC, ED, EE and EF. This allows an F8 microcomputer system to include both a 3852 DMI and a 3853 SMI.

I/O port addresses 0E and 0F (or EE and EF), though reserved for the 3852 DMI, are not used. Port 0C (or EC) is a general purpose, 8-bit data storage buffer which can be loaded with the OUT or OUTS instruction and read using the IN or INS instruction. Port 0D (or ED) is a control register which controls memory refresh and DMA operations.

DMA AND REFRESH CONTROL

Because of the organization of the F8 microcomputer system, there is a period within every instruction execution cycle when the CPU is not accessing memory.

DMA and Refresh Control logic generates timing and control signals that identify time periods when the CPU is not accessing memory; during these time periods memory is refreshed, or DMA data accesses occur.

OPERATIONAL DESCRIPTION

CLOCK TIMING

All timing within the MK3852 DMI is controlled by Φ and WRITE, which are input from the MK3850 CPU. Each machine cycle will contain either 4 Φ clock periods (short cycle) or 6 Φ clock periods (long cycle).

The WRITE clock refreshes and updates the MK3852 DMI. A machine cycle begins with the fall of the WRITE clock and the system control lines become stable shortly after the start of the cycle.

INSTRUCTION EXECUTION

The MK3852 DMI responds to signals which are output by the MK3850 CPU in the course of executing instruction cycles.

Table 1 summarizes the response of the MK3852 DMI to the ROMC states.

Table 1

ROMC STATES ROMC (Hexadecimal)	OPERATION PERFORMED	COMMENT
00	DB←((P0)); P0←P0 + 1	OP CODE, FETCH
01	DB←((P0)); P0←P0 + DB	BRANCH OFFSET FETCH
02	DB←((DC)); DC←DC + 1	
03	DB←((P0)); P0←P0 + 1	IMMEDIATE OPERAND FETCH
04	P0←P	
05	((DC))←DB; DC←DC + 1	
06	DB←DCU	
07	DB←PU	
08	P←P0; DB←H'00'; P0L, P0H←DB	EXTERNAL RESET
09	DB←DCL	
0A	DC←DC + DB	
0B	DB←PL	
0C	DB←((P0)); DCL←DB	
0D	P←P0 + 1	
0E	DB←((P0)); DCL←DB	
0F	NO OPERATION	
10	NO OPERATION	
11	DB←((P0)); DCU←DB	
12	P0L←DB; P←P0	
13	NO OPERATION	
14	P0U←DB	
15	PU←DB	
16	DCU←DB	
17	P0L←DB	
18	PL←DB	
19	DCL←DB	
1A	((pp))←DB or ((p))←DB	
1B	DB←(pp) or DB←((p))	
1C	NO OPERATION	
1D	DC⇄DC1	
1E	DB←P0L	
1F	DB←P0U	

Definitions:

DB - Data Bus
P0 - Program Counter
DC - Data Counter
DC1 - Aux Data Counter
P - Stack Register
pp - Two hex digits (long I/O port address)
p - One hex digit (short I/O port address)
1A - Interrupt address vector
L - Lower byte suffix
U - Upper byte suffix
( ) - Contents of
← - transfer to
⇄ - exchange

F8 Family

MEMORY ADDRESSING

Any dynamic RAM which is controlled by the 3852 DMI will have a PAGE SELECT input, which must be true if the memory is to respond to read or write control signal sequences.

PAGE SELECT true is created by logic external to the 3852 DMI, and defines the dynamic RAM address space. PAGE SELECT true can be generated in any way; there are no special rules.

For example, consider an F8 system with 1K bytes of ROM on a 3851 PSU and 4K bytes of dynamic RAM controlled by a 3852 DMI; address ranges will be as follows:

1K bytes of ROM	0000_{16} to $03FF_{16}$
4K bytes of RAM	0400_{16} to $13FF_{16}$

In binary format, the dynamic RAM address space is defined by:

```
          ADDR15
            ADDR12
            ADDR13
            ADDR10
                                    ADDR0
Minimum: 0 0 0 0 0 1 0 0 0 0 0 0 0 0 0 0
Maximum: 0 0 0 1 0 0 1 1 1 1 1 1 1 1 1 1
```

PAGE SELECT may be the OR of ADDR 12, ADDR11 and ADDR10, which are shown above.

Depending on the way in which dynamic RAM is being used, PAGE SELECT may be a simple memory enable signal, or it may be ANDed with CPU READ and $\overline{\text{RAM WRITE}}$, to generate local versions of these two signals which are locally true only.

3852 DMI ADDRESS REGISTERS' ADDRESS SPACE

As described in Table 1, certain ROMC states require the contents of the high order, or low order half of P0, P, or DC to be placed on the data bus. If there is more than one memory device in an F8 system, only one device must respond to these ROMC states.

The 3851 PSU uses its address select mask to determine if it is to place address register contents on the data bus; for the 3851 PSU, therefore, the memory and address registers' address spaces must be identical.

The 3852 DMI address registers' address space is identified by the REGDR signal; if this signal is not clamped low, the 3852 will place data on the data bus in response to ROMC states that require data from P0, P or DC to be placed on the data bus. If REGDR is derived from the PAGE SELECT signal, then the RAM memory and the 3852 DMI address registers' address spaces will coincide.

On the other hand, it is a good idea to make the 3852 DMI address registers' address space cover all addresses that are not part of another memory device's address registers' address space. For example, the following address spaces would be desirable:

ADDRESS SPACES

	MEMORY	ADDRESS REGISTERS
3851 PSU	0000_{16}-$03FF_{16}$	0000_{16}-$03FF_{16}$*
3852 DMI	0400_{16}-$13FF_{16}$	0400_{16}-$FFFF_{16}$

*For the 3851 PSU, the two address spaces must be identical.

If the address space for the address registers covers all possible memory addresses, then instructions that read data out of address registers will always generate a valid response.

In the above illustration, if memory and address registers' address spaces coincided for the 3852, then in response to instructions that require data to be output from P0, P, or DC, no device would respond when the selected address register contains a value in excess of $13FF_{16}$; as a result, invalid values would be received by the 3850 CPU.

ADDRESS CONTENTIONS

When a 3852 DMI is present in an F8 system, memory addressing contentions are resolved as described in Memory Addressing, with one exception: the 3852 DMI has a DC1 register and the 3851 PSU does not.

The XDC instruction (ROMC state 1D) causes the contents of the DC0 and DC1 registers to be exchanged; having no DC1 register, the 3851 PSU does not respond to this ROMC state, therefore 3851 PSU and 3852 DMI devices can have different values in their DC registers, and each value can be within the different address spaces of the two memory devices. An instruction that requires data to be output from DC may now cause two devices to simultaneously place different data on the data bus. This may be illustrated as follows:

		PSU	DMI
Before XDC:	DC	=XXXX	XXXX
	DC1	=	YYYY
After XDC:	DC	=XXXX	YYYY
	DC1		XXXX

If XXXX happens to be in a PSU's address space while YYYY is in the DMI address space, then address contentions will arise.

F8 Family

Even if XXXX is not in the PSU's address space, address contentions may arise due to the fact that memory reference instructions will increment different DC contents. Suppose two memory reference instructions are executed following one XDC, then another XDC is executed; this is what happens:

		PSU →	DMI
After first XDC:	DC	= XXXX	YYYY
	DC1	=	XXXX
After two memory	DC	= XXXX+2	YYYY+2
reference instructions:	DC1	=	XXXX
After second XDC:	DC	= XXXX+2	XXXX
	DC1	=	YYYY+2

An address contention may arise if DC contents approaches the boundary of the PSU address space. For example, if the address space boundary occurs at XXXX+1, the PSU and the DMI will both consider themselves selected.

The following coding instruction sequence shows how to use the DC instruction without encountering address contentions. The example allows use of a second address value YYYY, which is held in DC1, while using the H register to temporarily hold the first address value, XXXX. Address YYYY, which at the beginning of the example is held in DC1, must be in the DMI address space. The address XXXX may be in any address space.

INSTRUCTION	PSU DC0	DMI DC0	DMI DC1
	XXXX	XXXX	YYYY
LR H,DC			
DCI ZZZZ	ZZZZ	ZZZZ	YYYY
XDC	ZZZZ	YYYY	ZZZZ
—			
—			
—			
Other Instructions			
—			
—			
—	ZZZZ+N	YYYY+N	ZZZZ
XDC	ZZZZ+N	ZZZZ	YYYY+N
LR DC,H	XXXX	XXXX	YYYY+N

For the above scheme to work, it is only necessary for ZZZZ through ZZZZ+N to be outside any PSU's address space.

If the value XXXX through XXXX+N is outside of any PSU's address space, then the DCI ZZZZ instruction may be omitted.

In many cases, it will not be necessary to restore the XXXX value; then the LR H,DC and LR DC, H instructions can also be omitted—letting a subsequent DC loading instruction synchronize the DC's.

Before a value held in DC1 can be used, it must first have been loaded into DC1. The XDC instruction is used to load DC1. Consider the following instruction sequence:

INSTRUCTION		PSU DC	DMI DC	P
		XXXX	XXXX	WWWW
DCI	YYYY	YYYY	YYYY	
XDC		YYYY	WWWW	YYYY
DCI	ZZZZ	ZZZZ	ZZZZ	YYYY

YYYY lies in the address space of the DMI, ZZZZ lies anywhere, XXXX and WWWW are arbirtary initial values. The DCI instructions could just as well be LR DC, H or LR DC, Q.

The exchange of DC and DC1 becomes most powerful when a series of swaps are used to add two blocks of memory, or to move data from one block to a second. The XDC instruction can be used to do this so long as neither block is in a PSU's address space. Notice that the DC of the PSU is out of step throughout the example.

INSTRUCTION		PSU P0	DMI DC	DMI DC1
		XXXX	XXXX	YYYY
DCI	ZZZZ	ZZZZ	ZZZZ	YYYY
LM		ZZZZ+1	ZZZZ+1	YYYY
XDC		ZZZZ+1	YYYY	ZZZZ+1
ST		ZZZZ+2	YYYY+1	ZZZZ+1
XDC		ZZZZ+2	ZZZZ+ 1	YYYY+1
Other Instructions				
LM		ZZZZ+ΔZ+ΔY-1	ZZZZ+ΔZ	YYYY+ΔY
XDC		ZZZZ+ΔZ+ΔY-1	YYYY+ΔY-1	ZZZZ+ΔZ
ST		ZZZZ+ΔZ+ΔY	YYYY+ΔY	ZZZZ+ΔZ
DCI	WWWW	WWWW	WWWW	ZZZZ+ΔZ

In the above example ZZZZ and YYYY both lie in the address of a DMI. The space spanned by ZZZZ to ZZZZ + ΔZ + ΔY must be outside of any PSU's address space.

TIMING SIGNALS OUTPUT BY A 3852 DMI

Within an instruction cycle, there may be either two or three memory access periods, depending on whether the instruction cycle is long or short. A memory access period is equivalent to two Φ clock periods, and is identified by CYCLE REQ, which is a divide-by-two of Φ. Whether the instruction cycle is short, or long, depends on the source and destination of the data being transmitted during instruction execution.

During the first memory access period, the 3852 DMI outputs the contents of P0 on the address lines of ADDR0-ADDR15.

In effect, 3852 DMI logic beings by assuming that a memory read is to occur, with the memory address provided by P0.

While the contents of P0 are being output on the address lines, the 3852 DMI control unit, in parallel,

decodes the ROMC state which has been received from the 3850 CPU.

If the assumed logic proves to be correct, or if no memory access is to occur, then the second access period can be used for memory refresh or DMA.

If the instruction, once decoded by the CPU, specifies a memory read with another memory address, then the 3852 DMI wastes the first access period. The instruction cycle will always be long in this case. During the second access period, the required memory access is performed, while memory refresh occurs, or DMA is implemented in the third access period.

If a memory write instruction is decoded, then no access periods are available for memory refresh or DMA.

Four variations of the instruction cycle result. The timing diagrams illustrating the four variations represent worst cases, and assume td_2 = 150ns. These are the four variations:

3852 DMI TIMING SIGNALS OUTPUT DURING A SHORT CYCLE MEMORY READ WITH ADDRESS FROM PO
Figure 2

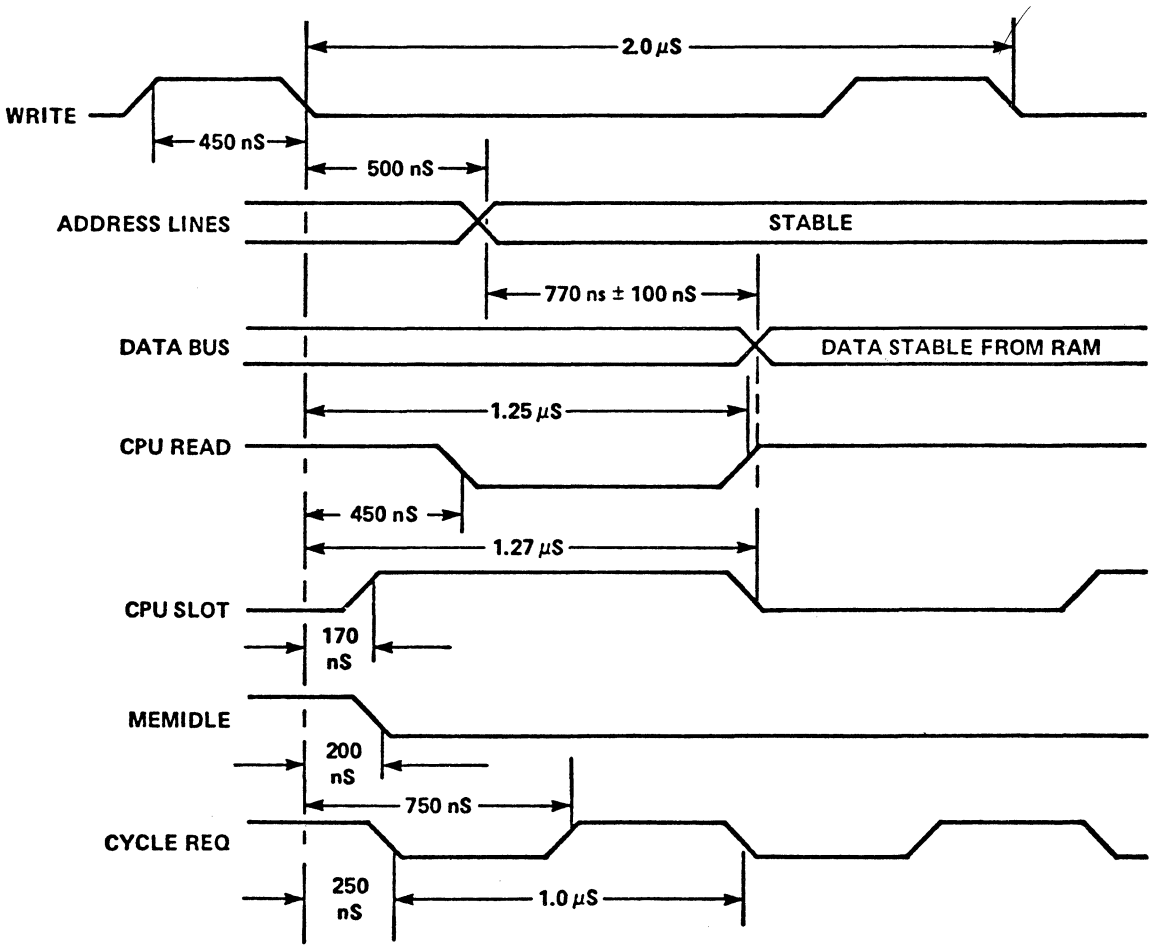

1. The instruction fetch. The memory address originates in PO and the instruction cycle is short. Timing is shown in Figure 2.

3852 DMI TIMING SIGNALS OUTPUT DURING A LONG CYCLE MEMORY READ, WITH ADDRESS OUT OF PROGRAM COUNTER

Figure 3

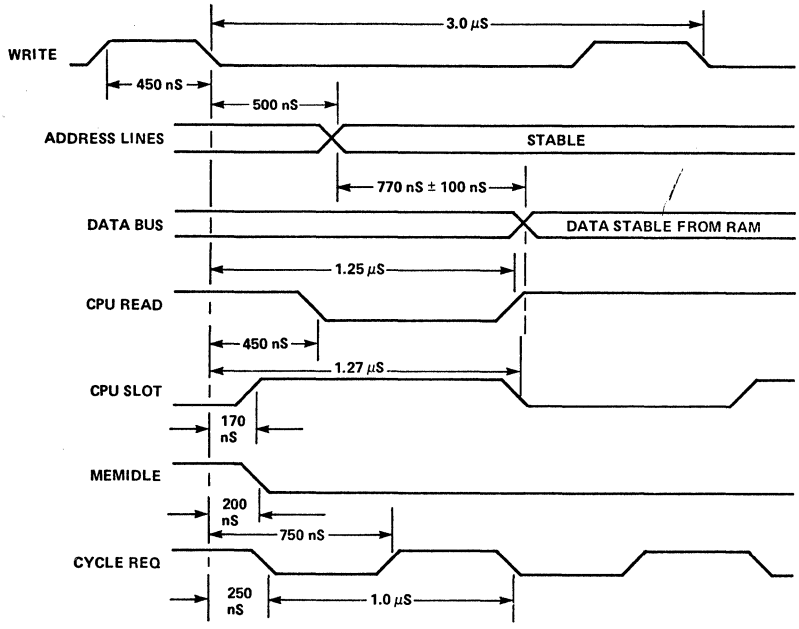

2. An immediate operand fetch. The memory address originates in P0, and the instruction cycle is long. Timing is shown in Figure 3.

3852 DMI TIMING SIGNALS OUTPUT DURING A LONG CYCLE MEMORY READ, WITH ADDRESS OUT OF DATA COUNTER

Figure 4

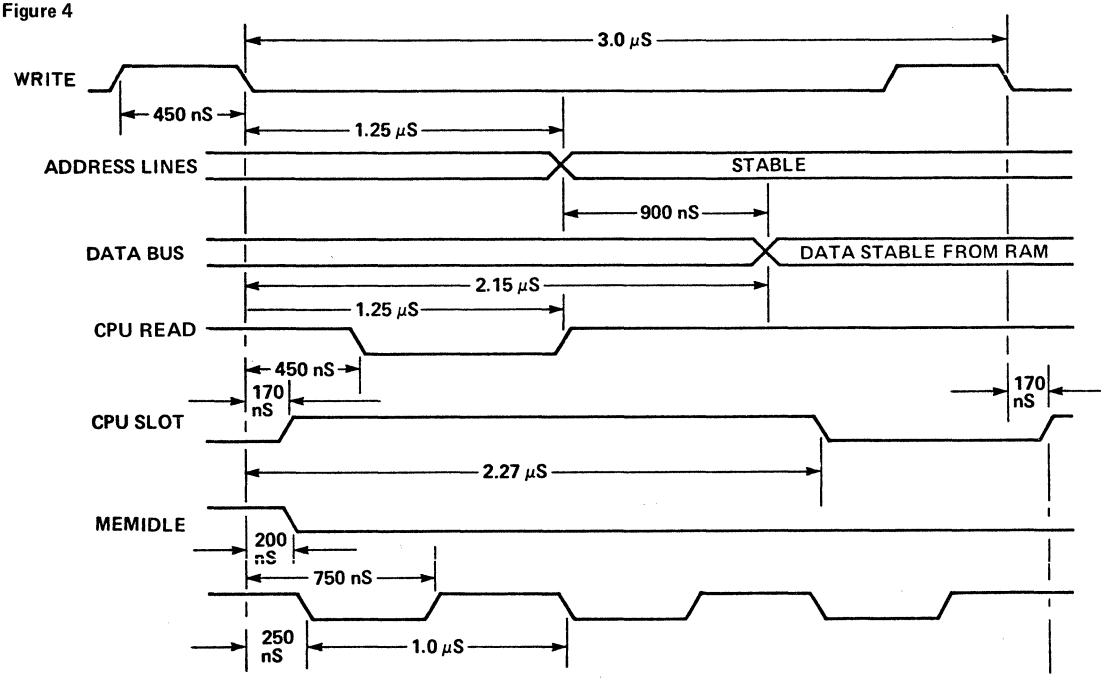

3. A data fetch. A data byte is output from an address register, or the memory address originates in DC, therefore the instruction cycle is long. Timing is shown in Figure 4.

3852 DMI TIMING SIGNALS OUTPUT DURING A WRITE TO MEMORY
Figure 5

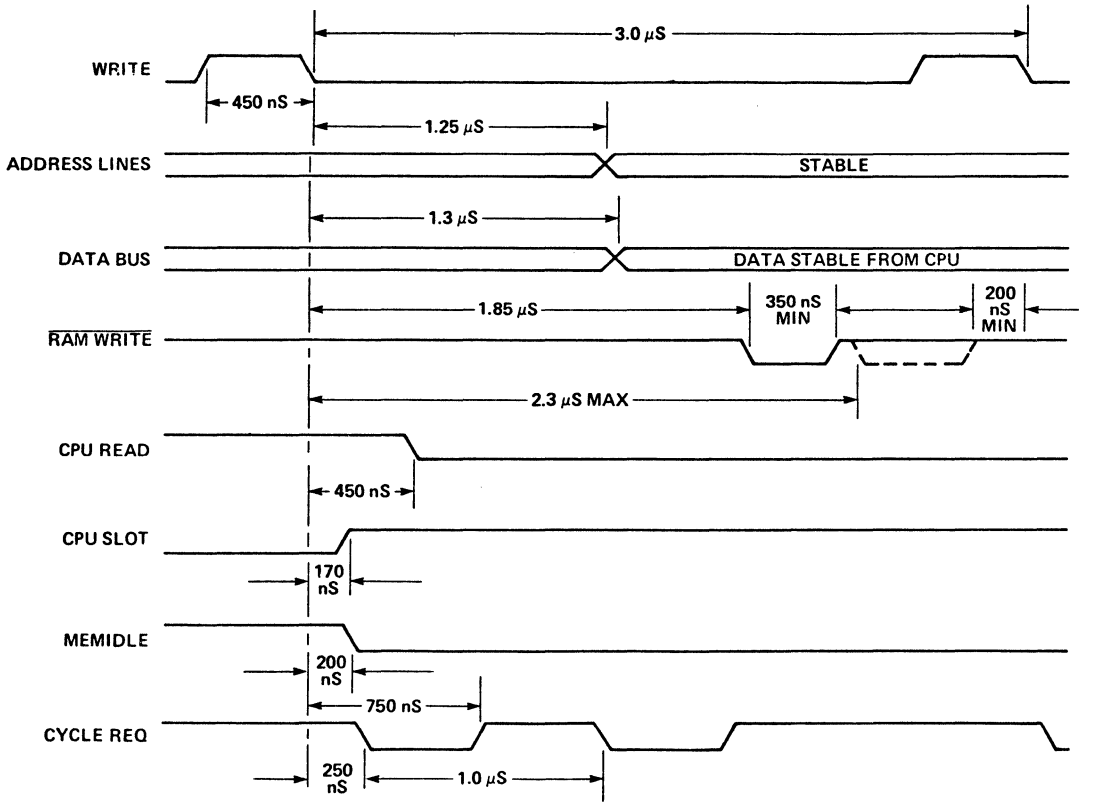

4. A memory write. Data is written into the RAM memory location addressed by DC. Timing is shown in Figure 5.

CPU SLOT and MEM IDLE identify the way in which a memory access period is being used. Figures 6 and 7 illustrate the relationship.

When the 3850 CPU is accessing memory, CPU SLOT is high; RAM WRITE and the address lines are driven at this time.

When memory is available for DMA access, CPU SLOT is low, and MEM IDLE is high.

When the 3852 DMI is refreshing dynamic memory CPU SLOT and MEM IDLE are both low.

3852 DMI logic is able to achieve two memory accesses within one instruction cycle by pursuing the logic sequence summarized in Table 2. Buffer/latches are placed on the F8 data bus lines between the RAM and the F8 system to hold the data fetched during the first access.

TIMING FOR MEMORY REFRESH AND DMA DURING A SHORT CYCLE MEMORY READ, WITH ADDRESS OUT OF PROGRAM COUNTER
Figure 6

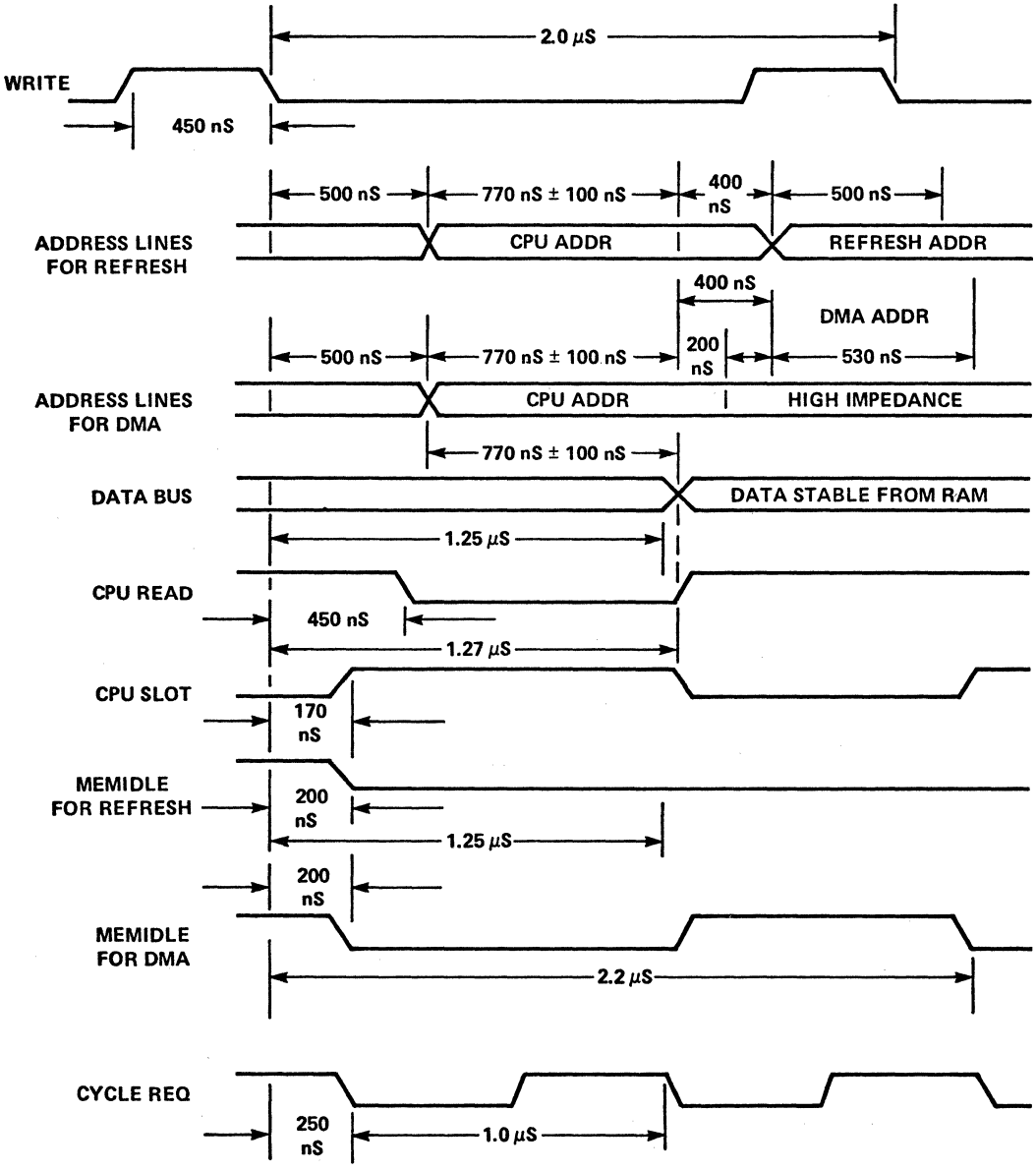

TIMING FOR MEMORY REFRESH AND DMA DURING A LONG CYCLE MEMORY READ, WITH ADDRESS OUT OF PROGRAM COUNTER

Figure 7

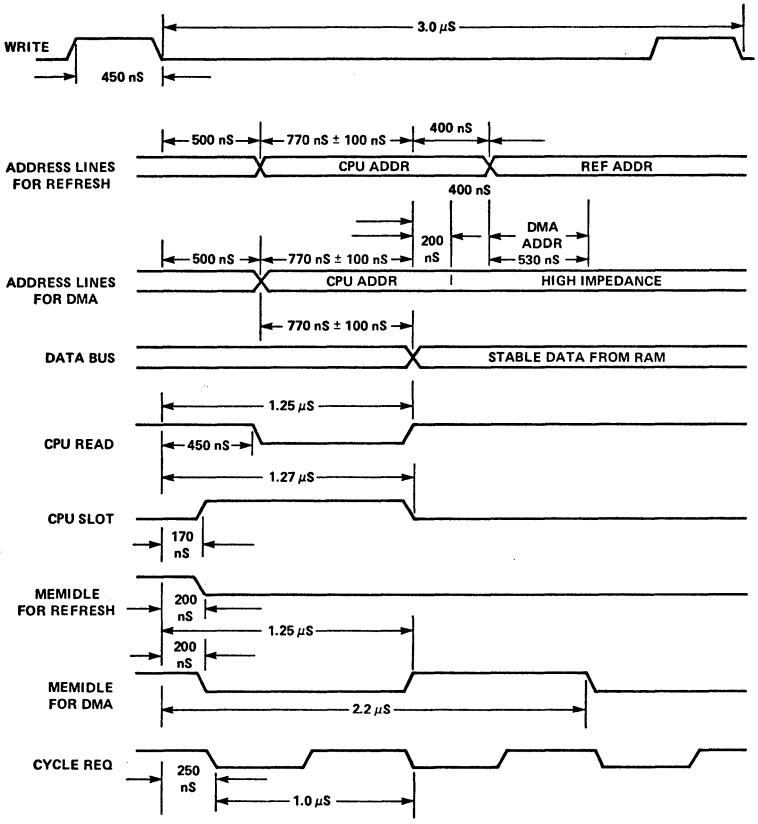

Table 2

OPERATION PERFORMED DURING INSTRUCTION CYCLE	FIRST ACCESS	SECOND ACCESS	THIRD ACCESS
No memory access, or read from memory addressed by P0. (See Figure 2.)	[P0]→A0 - A15	Latch data on F8 data bus. Second memory access for DMA or refresh.	None
No memory access, or read from memory addressed by P0. (See Figure 3.)	[P0]→A0 - A15	Latch data on F8 data bus. Second memory access for DMA or refresh.	Third memory access not used.
Read data from memory addressed by register other than P0, or read data from address register. (See Figure 4.)	[P0]→A0 - A15	[Other register]→A0 -15	Latch data on F8 data bus. Third memory access for DMA or refresh
Write data to memory. (See Figure 5.)	[P0]→A0 - A15	[DC]→A0 - A15	Access memory to write data. No DMA or refresh.
[ ] means "contents of register identified within square brackets.			

MEMORY REFRESH AND DIRECT MEMORY ACCESS

These two topics are covered together, since in terms of 3852 DMI logic, they are similar operations.

CYCLE REQ identified 2 or 3 memory access periods witnin an instruction cycle.

Either the first or the second access period, as summarized in Table 2, is reserved for the instruction cycle being decoded. Let us refer to this as the "reserved" access period. If the ROMC state for the instruction cycle requires data to be read out of RAM, then the read occurs during the reserved access period. If the ROMC state for the instruction cycle requires data to be input to an address register, or if no data movement occurs on the data bus, then the reserved access period is not used for any memory access—it is, in effect, wasted.

One more memory access may occur within the instruction cycle; this occurs during either the second or third access period, as summarized in Table 2, while the data bus latches hold data accessed during the first period. We will refer to this as the "free" access period.

Some available free access periods must be used to refresh dynamic RAM. A refresh uses logic within the 3852 DMI. Therefore a refresh occurs in parallel to anything else that is going on.

If the free access period is not used to refresh dynamic RAM, it may be used by a 3854 DMA device to perform direct memory accesses. The DMA uses a separate data channel to access memory, so DMA can occur in parallel with anything else that is going on within the F8 system.

DATA OUTPUT BY RAM

Figures 2, 3, and 4 provide worst case timing when RAM, controlled by the 3852 DMI, outputs data onto the data bus. In these figures it is assumed that CPU SLOT is used to strobe the RAM data into the data bus latches.

CPU READ is output high by the 3852 DMI to enable transfer of data from the data bus buffers to the data bus. Recall that dynamic RAM have its own connection to the data bus via buffer/latches; data is not transferred via the 3852 DMI.

Observe that CPU READ high is similar to $\overline{\text{DBDR}}$ low—each is active when its respective data bus drivers are turned on.

DATA OUTPUT BY THE 3852 DMI

REGDR defines the address space of the address registers within the 3852 DMI.

If a ROMC state received by the 3852 DMI requires data to be output from an address register, then the 3852 DMI will become the selected data source if REGDR is allowed to go high.

DATA INPUT TO RAM

Figure 5 provides worst case timing when data is written into RAM. Data is transferred through tri-state buffers on the data bus and into RAM.

$\overline{\text{RAM WRITE}}$ is pulsed low by the 3852 DMI to enable the transfer of data off the data bus, into RAM. The tri-state buffers or multiplexers between data bus and RAM WRITE data lines are necessary if DMA sources are also allowed to write into RAM.

DATA INPUT TO THE 3852 DMI

Problems of addressing contention are posed by having duplicated address registers; one step in resolving this possible problem is to force every memory device to read onto its address registers whenever a ROMC state specifies any such operation. Address space concepts therefore do not apply when data is read into 3852 DMI address registers.

INPUT/OUTPUT

There are two versions of the 3852 DMI; each has four reserved I/O port addresses, implemented as follows:

PORT ADDRESSES		FUNCTION
STANDARD	OPTION	
0C	EC	General purpose latch
0D	ED	Memory/DMA control
0E	EE	Not implemented
0F	EF	Not implemented

Option port addresses are used in F8 systems that include both a 3852 DMI and a 3853 SMI.

The implemented I/O ports are accessed via IN, INS, OUT and OUTS instructions, just like any other I/O port. However, the 3852 DMI I/O ports are internal latches, having no connection to I/O pins or external interface. REGDR, if not clamped low by an external device, will go high during IN or INS instructions that select either of the DMI ports. However, clamping REGDR low does not inhibit data bus driving during I/O as it did during the output of address registers.

I/O port 0C (or EC) is used as a general purpose, 8-bit data storage location.

I/O port 0D (or ED) controls memory refresh and DMA as follows:

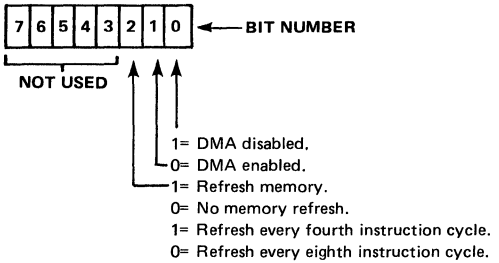

SYSTEM INITIALIZATION

An F8 system is initialized by power on, or EXT RESET being pulsed low at the CPU.

When an F8 system is initialized, DMA is turned off and memory refresh is on, with refresh every fourth cycle selected.

Contents of all other registers are indeterminate; reading the control port 0D (or ED) also gives indeterminate results, although the DMA/refresh state of the DMI has been initialized.

ELECTRICAL SPECIFICATIONS

ABSOLUTE MAXIMUM RATING (All voltages with respect to V_{SS})*

V_{GG} . . . . . +15V to −0.3V
V_{DD} . . . . . +7V to −0.3V
All other inputs and outputs . . . . . +7V to −0.3V
Operating temperature, T_A (Ambient) . . . . . 0°C to +70°C
Storage temperature - Ambient (Ceramic) . . . . . −65°C to +150°C
Storage temperature - Ambient (Plastic) . . . . . −55°C to +125°C

*Stresses above those listed under "Absolute Maximum Ratings" may cause permanent damage to the device. This is a stress rating only and functional operation of the device at these or any other condition above those indicated in the operational sections of this specification is not implied. Exposure to absolute maximum rating conditions for extended periods may affect device reliability.

RECOMMENDED DC OPERATING CONDITIONS

($0°C \leqslant T_A \leqslant 70°$ C)

SYMBOL	PARAMETER	MIN	TYP	MAX	UNITS	TEST CONDITIONS
V_{DD}	Supply	4.75	5.0	5.25	Volts	
V_{GG}	Voltage	11.4	12.0	12.6	Volts	
V_{SS}		0	0	0	Volts	

DC ELECTRICAL CHARACTERISTICS

($0°C \leqslant T_A \leqslant 70°C$) V_{DD} = +5V ± 5%; V_{GG} = +12V ± 5%; V_{SS} = 0V

SYMBOL	PARAMETER	MIN	TYP	MAX	UNITS	TEST CONDITIONS
I_{DD}	V_{DD} Current		35	70	mA	f=2MHz, Outputs unloaded
I_{GG}	I_{GG} Current		13	30	mA	f=2MHz, Outputs unloaded

DATA BUS (DB0-DB7)

SYMBOL	PARAMETER	MIN	MAX	UNITS	TEST CONDITIONS
V_{IH}	Input High Voltage	3.5	V_{DD}	Volts	
V_{IL}	Input Low Voltage	V_{SS}	.8	Volts	
V_{OH}	Output High Voltage	3.9	V_{DD}	Volts	I_{OH} = −100μA
V_{OL}	Output Low Voltage	V_{SS}	.4	Volts	I_{OL} = 1.6mA
I_{IH}	Input High Current		1	μA	$V_{IN} = V_{DD}$, three-state mode
I_{IL}	Input Low Current		−1	μA	$V_{IN} = V_{SS}$, three-state mode
C_I	Capacitance		10	pF	Three-state mode

CONTROL LINES (ROMC0–ROMC4), AND CLOCK LINES (Φ, WRITE)

SYMBOL	PARAMETER	MIN	MAX	UNITS	TEST CONDITIONS
V_{IH}	Input High Voltage	3.5	V_{DD}	Volts	
V_{IL}	Input Low Voltage	V_{SS}	.8	Volts	
I_L	Leakage Current		1	μA	$V_{IN} = V_{DD}$
C_I	Capacitance		10	pF	

ADDRESS LINES (ADDR0-ADDR15) AND $\overline{\text{RAM}}$ $\overline{\text{WRITE}}$

SYMBOL	PARAMETER	MIN	MAX	UNITS	TEST CONDITIONS
V_{OH}	Output High Voltage	4.0	V_{DD}	Volts	$I_{OH} = -1mA$
V_{OL}	Output Low Voltage		.4	Volts	$I_{OL} = 3.2mA$
I_L	Leakage Current		1	μA	$V_{IN} = V_{DD}$

REGDR AND CPU SLOT

SYMBOL	PARAMETER	MIN	MAX	UNITS	TEST CONDITIONS
V_{OH}	Output High Voltage	3.9	V_{DD}	Volts	$I_{OH} = -300\mu A$
V_{OL}	Output Low Voltage	V_{SS}	.4	Volts	$I_{OL} = 2mA$
V_{IH}	Input High Voltage	3.5	V_{DD}	Volts	Internal Pull-up to V_{DD}
V_{IL}	Input Low Voltage	V_{SS}	.8	Volts	
I_{IL}	Input Low Current	−3.5	−14.0	mA	V_{IN} = .4V and device outputting a logic "1"
I_L	Leakage Current		1	μA	$V_{IN} = V_{DD}$

CPU READ, MEMIDLE, AND CYCLE REQ

SYMBOL	PARAMETER	MIN	MAX	UNITS	TEST CONDITIONS
V_{OH}	Output High Voltage	3.9	V_{DD}	Volts	$I_{OH}=-1mA$
V_{OL}	Output Low Voltage	V_{SS}	.4	Volts	$I_{OL} = 2mA$
I_L	Leakage Current		1	μA	$V_{IN} = V_{DD}$

F8 Family

AC ELECTRICAL CHARACTERISTICS

($0°C \leqslant T_A \leqslant 70°C$) ($V_{DD}$ = +5V ± 5%; V_{GG} = +12V ± 5%; V_{SS} = 0V)

SYMBOL	PARAMETER	MIN	TYP	MAX	UNIT	TEST COND.
PΦ	Φ Clock Period	0.5		10	μS	
PW_1	Φ Pulse Width	180		PΦ–180	ns	
td_1	Φ to write + delay	0		300	ns	CL=100pF
td_2	Φ to write – delay	0		250	ns	CL=100pF
PW_2	Write Pulse Width	PΦ–100		PΦ	ns	
PW_S	Write Period; Short		4PΦ		ns	
PW_L	Write Period; Long		6PΦ		ns	
td_3	Write to ROMC Delay			750	ns	
tad_1	Address delay if PC0	50	300	500	ns	3
tad_2	Address delay to high Z(short cycle with DMA on)	tcs_2+50		tcs_2+200	ns	3
tad_3	Address delay to refresh(short cycle with REF on)	tcs_2+50		tcs_2+400	ns	3
tad_4	Address delay if DC	2PΦ+50-td_2		2PΦ+400-td_2	ns	3
tad_5	Address delay to high Z(long cycle with DMA on)	tcs_3+50		tcs_3+200	ns	3
tad_6	Address delay to refresh(long cycle with REF on)	tcs_3+50		tcs_3+400	ns	3
tcr_1	CPU READ-Delay	50	250	450	ns	1
tcr_2	CPU READ + Delay	2PΦ+50-td_2		2PΦ+400-td_2	ns	1
tcs_1	CPU SLOT + Delay	80-td_2		320-td_2	ns	1
tcs_2	CPU SLOT - Delay (PC0 access)	2PΦ+60-td_2		2PΦ+420-td_2	ns	1
tcs_3	CPU SLOT - Delay (DC access)	4PΦ+60-td_2		2PΦ+420-td_2	ns	1
tm_1	MEMIDLE + Delay (PC0 access)	2PΦ+50-td_2		4PΦ+400-td_2	ns	1
tm_2	MEMIDLE - Delay (PC0 access)	4PΦ+50-td_2		4PΦ+350-td_2	ns	1
tm_3	MEMIDLE + Delay (DC access)	4PΦ+50-td_2		4PΦ+400-td_2	ns	1
tm_4	MEMIDLE - Delay (DC access)	6PΦ+50-td_2		6PΦ+350-td_2	ns	1
tcy_1	WRITE to CYCLE REQ – Delay	80-td_2		400-td_2	ns	1,4
tcy_2	WRITE to CYCLE REQ + Delay	PΦ+80-td_2		PΦ+400-td_2	ns	1,4
tcy_3	CYCLE REQ + to + Edge Delay		2PΦ			1,4
tcy_4	CYCLE REQ - to - Edge Delay		2PΦ			1,4
twr_1	$\overline{\text{RAM WRITE}}$ - Delay	4PΦ+50-td_2		4PΦ+450-td_2	ns	3
twr_2	$\overline{\text{RAM WRITE}}$ + Delay	5PΦ+50-td_2		5PΦ+300-td_2	ns	3
twr_3	$\overline{\text{RAM WRITE}}$ Pulse Width	350		PΦ	ns	3
twr_4	$\overline{\text{RAM WRITE}}$ to High Z Delay	tcs_2+40		tcs_2+200	ns	3
trg_1	REGDR - Delay	70	300	500	ns	1
trg_2	REGDR + Delay	2PΦ+80-td_2		2PΦ+500-td_2	ns	1
td_4	WRITE to Data Bus Input Delay			2PΦ+1000	ns	
td_7	WRITE to Data Bus Output Delay	2PΦ+100-td_2		2PΦ+850-td_2		2

NOTES:

1. C_L = 50pF
2. C_L = 100pF.
3. C_L = 500pF.
4. CYCLE REQ is a divide-by-2 of Φ for all instructions except the STORE instruction.

F8 Family

TIMING DIAGRAM

Figure 2

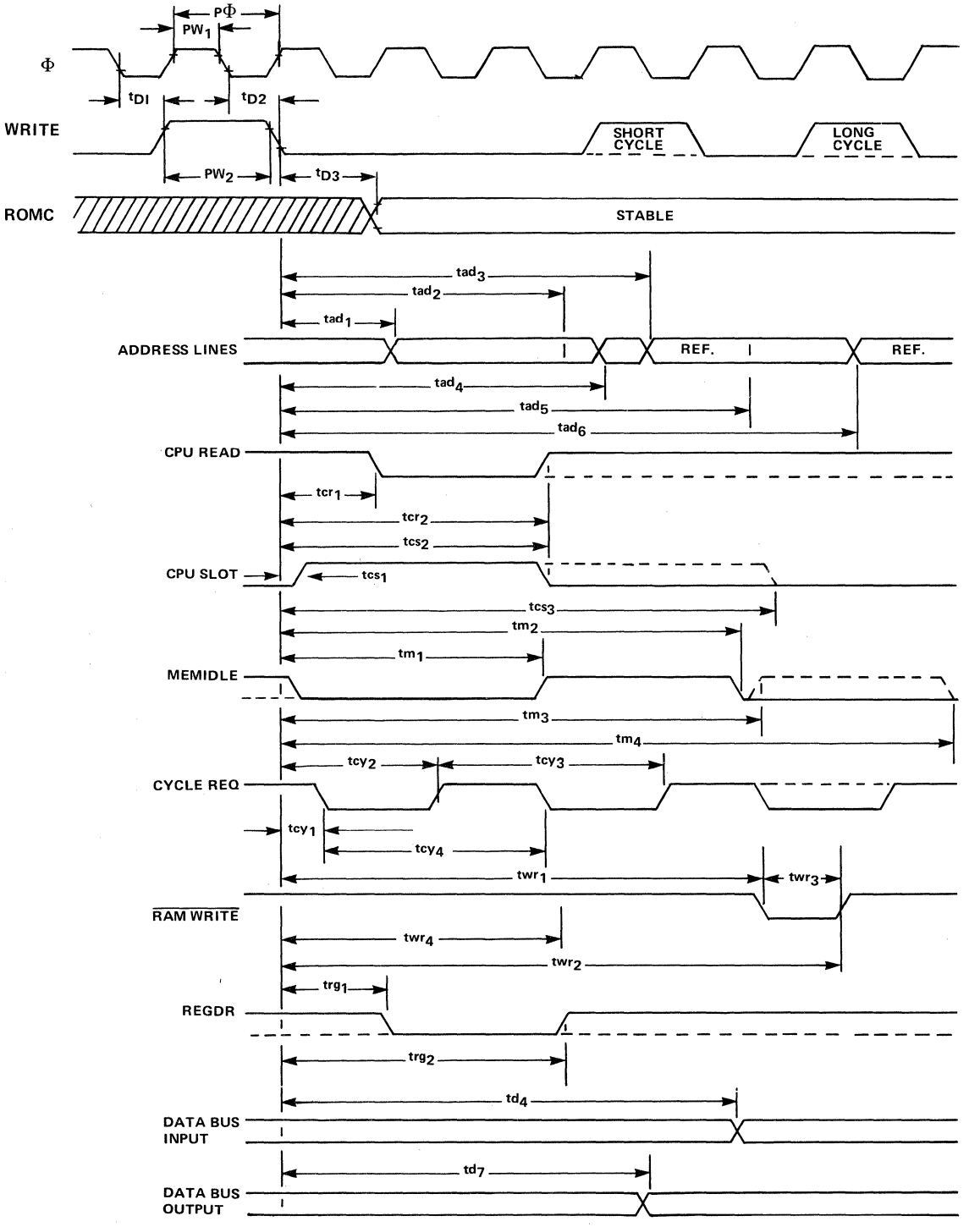

F8 Family

PACKAGE DESCRIPTION: 40-Pin Dual In-Line Ceramic Package

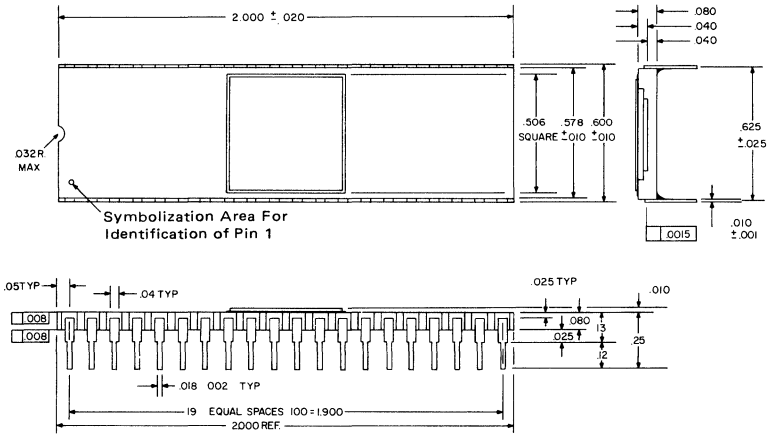

PACKAGE DESCRIPTION — 40-Pin Dual-in-Line Plastic Package

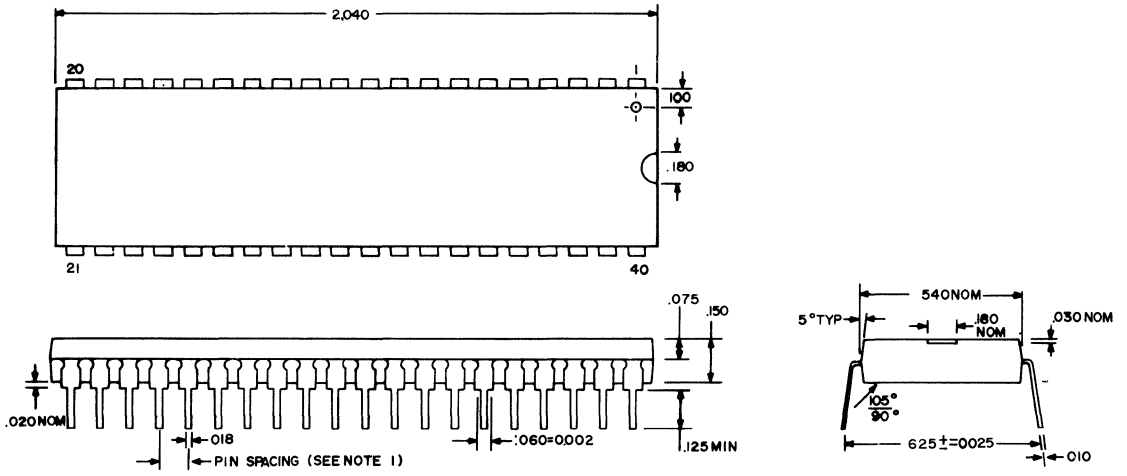

ORDERING INFORMATION

PART NUMBER	PACKAGE	TEMPERATURE RANGE
MK3852P	Ceramic	0°C to +70°C
MK3852N	Plastic	0°C to +70°C
MK3852P-10	Ceramic	-40°C to +85°C
MK3852N-10	Plastic	-40°C to +85°C

F8 Family