Peripheral Input/Output MK3861

FEATURES

- ☐ Two 8-bit I/O ports
- ☐ Programmable timer
- ☐ External/timer interrupt control circuitry
- ☐ Low power dissipation-typically less than 200mW

GENERAL DESCRIPTION

Each 3861 Peripheral Input/Output Circuit (PIO) provides two 8-bit I/O ports, a programmable timer and a vectored timer or external interrupt for the F8 system. The timer, I/O ports and interrupt circuitry are identical to those of the MK 3851 PSU. The 3861 may be used to provide extra I/O, timer, and interrupt functions compatible with those of the 3851 PSU, or the 3861 may be used as the only I/O peripheral in non PSU systems. This circuit in conjunction with the 3853 and standard PROM is particularly useful in prototyping a PSU system. The 3853 MI circuit along with standard PROM can emulate the memory functions of the PSU while the 3861 provides the I/O, interrupt, and timer features of the PSU. The 3861 is manufactured using the same high performance N-channel Isoplanar technology as the F8 CPU.

PIN NAME	DESCRIPTION	TYPE
D0-D7	Data Bus Lines	Bi-directional, Tri-State
$\overline{\text{I/O A0}}$ - $\overline{\text{I/O A7}}$	I/O Port A	Bi-directional
$\overline{\text{I/O B0}}$ - $\overline{\text{I/O B7}}$	I/O Port B	Bi-directional
ROMC0-ROMC4	System Control Lines	Input
ϕ, WRITE	Clock Lines	Input
$\overline{\text{EXT INT}}$	External Interrupt	Input
$\overline{\text{PRI IN}}$	Priority In	Input
$\overline{\text{PRI OUT}}$	Priority Out	Output
$\overline{\text{INT REQ}}$	Interrupt Request	Output
$\overline{\text{DBDR}}$	Data Bus Drive	Output
V_{SS}, V_{DD}, V_{GG}	Power Lines	Input

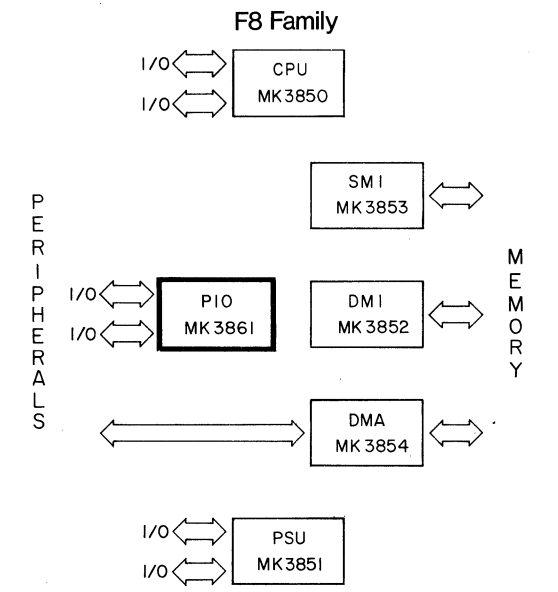

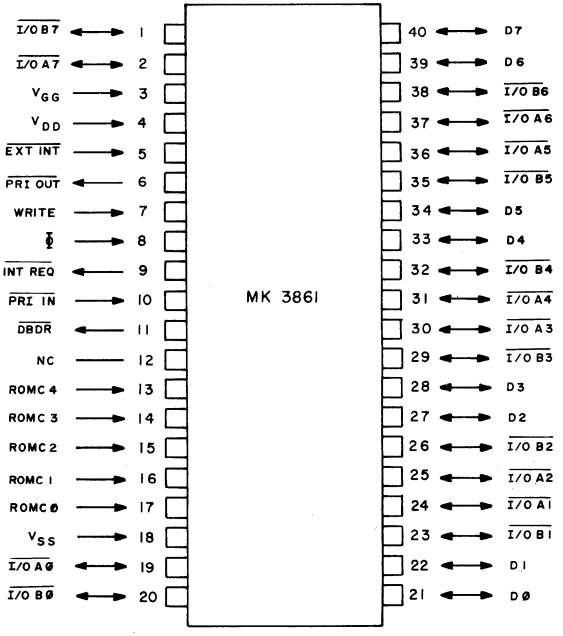

F8 Family

FUNCTIONAL PIN DEFINITION

D0-D7 (BI-DIRECTIONAL, TRI-STATE)

DATA BUS: The Data Bus provides bi-directional communication between the F8 CPU and the 3861 and all other peripheral circuits for transfer of data. D0 is the least significant bit.

$\overline{\text{I/O A0}}$ – $\overline{\text{I/O A7}}$ and $\overline{\text{I/O B0}}$ – $\overline{\text{I/O B7}}$ (Bidirectional)

I/0 PORTS: Two 8-bit I/0 ports are located on the 3861 PIO. These ports are referred to as Port A and Port B herein, but the actual port number is determined by the version of the 3861 that is selected. These ports have output latches to hold output data, and hysteresis circuits are provided to add input noise immunity. Bit 0 of each port is the least significant bit.

ROMC0 – ROMC4 (INPUT)

SYSTEM CONTROL LINES: These lines provide the 3861 with control information from the F8 CPU. The CPU sets up these lines early in each machine cycle, and the PIO executes that command during that cycle.

Φ (INPUT)

Φ (PHI) CLOCK: This is the high frequency F8 system clock. It is generated by the F8 CPU. Each machine cycle contains either 4 Φ periods (short cycle) or 6 Φ periods (long cycle).

WRITE (INPUT)

WRITE CLOCK: This clock defines the machine cycle. The cycle starts with the fall of the WRITE clock. The system control lines become stable shortly after the start of the cycle and the PIO decodes and executes the command communicated by the control lines. All ROMC commands are started and completed within one cycle of WRITE.

$\overline{\text{EXT INT}}$ (INPUT)

EXTERNAL INTERRUPT: When an external circuit pulls this input "low" an external interrupt request will be latched into the PIO if its interrupt control register has been set up to allow external interrupts. The PIO will subsequently communicate this interrupt request to the CPU via its $\overline{\text{INT REQ}}$ line.

$\overline{\text{PRI IN}}$ (INPUT)

PRIORITY IN: This input signals the PIO that a higher priority peripheral has an interrupt request impending on the CPU. If the PIO has already requested an interrupt, it will maintain that request, but it will not be serviced by the CPU until its $\overline{\text{PRI IN}}$ input is in the "low" state. If an interrupt is received, it will be latched into the PIO but it will not be serviced until $\overline{\text{PRI IN}}$ is in the "low" state.

$\overline{\text{PRI OUT}}$ (OUTPUT)

PRIORITY OUT: This output signals lower priority peripherals that the PIO either has an interrupt request impending on the CPU, or that a still higher priority peripheral has requested an interrupt.

$\overline{\text{INT REQ}}$ (OUTPUT)

INTERRUPT REQUEST: This open drain output is wired ANDed with the corresponding output on all other peripherals to form the interrupt request input to the CPU.

$\overline{\text{DBDR}}$ (OUTPUT)

DATA BUS DRIVE: This output goes "low" whenever the PIO is driving the Data Bus as an output. It may be used to control tri-state buffers in a buffered Data Bus system and to signal other peripherals that the PIO has "control" of the Data Bus at that time.

V_{SS} (INPUT)

V_{SS}: This is system ground (0V.) V_{DD} and V_{GG} are referenced to V_{SS}.

V_{DD} (INPUT)

V_{DD}: Power line; +5V ± 5%.

V_{GG} (INPUT)

V_{GG}: Power line; +12V ± 5%.

PIO ARCHITECTURE

Figure 3.0.1 shows the various functional blocks and registers. The 3861 uses the clock signals 'Φ' and 'WRITE', which are generated by the CPU to control timing functions within the circuit. It also uses the contents on five control lines (ROMC's) as various commands to be performed within each cycle. A control ROM within the PIO decodes the five control lines and provides control within the circuit.

ADDRESSABLE PORTS

The 3861 has four addressable ports. They are linked to the accumulator of the CPU by the I/O instructions. Each port is referenced by an 8-bit address. The upper six bits of the address refer to the circuit on which the ports are located while the lower two bits select one of the four ports; hence, the port addresses are referred to as X0,X1,X2 and X3, where X is a six-bit binary number determined by the particular version of the 3861 that is selected. Each port on the device may be writtten into using output instructions. The contents of the I/O ports may be read using input instructions. These instructions initiate the transfer to contents between ports and the accumulator on the CPU. In the PIO circuit, two ports are used as 8-bit I/O ports. The remaining two ports are the 8-bit timer and the local interrupt control port. Table 3.1.1 lists the addressable ports and their respective functions.

PIO FUNCTIONAL DIAGRAM

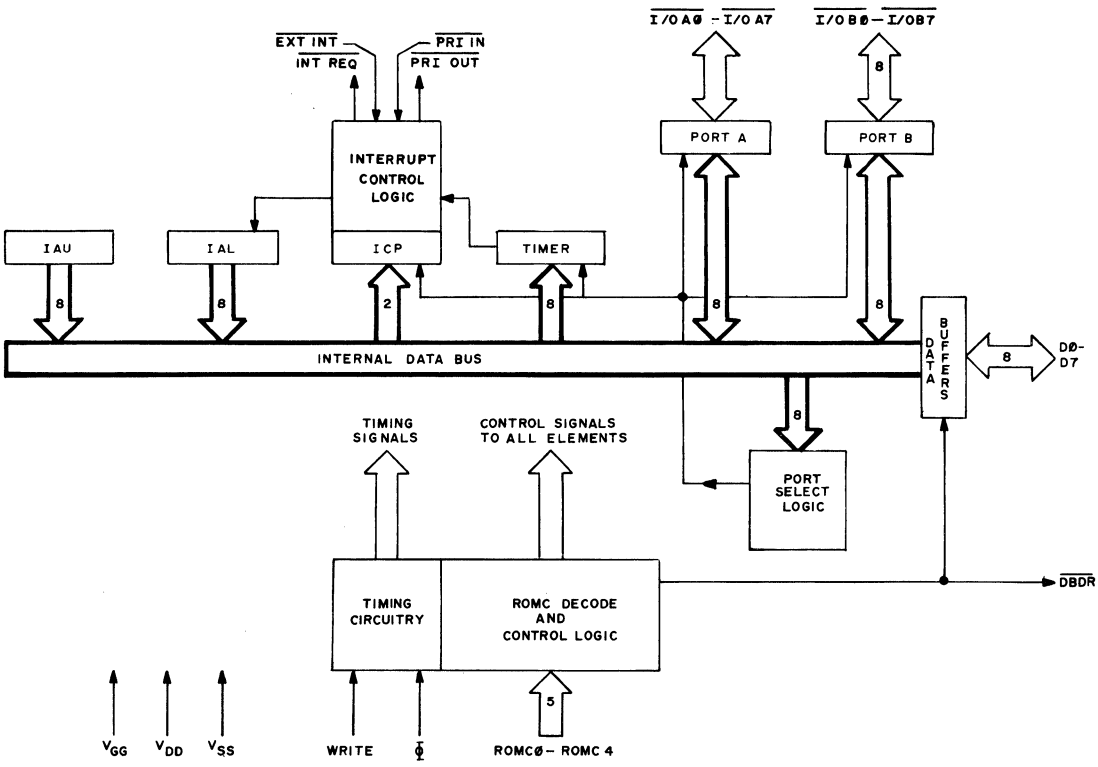

Figure 3.0.1

Table 3.1.1
3861 PIO PORT ASSIGNMENTS

PORT ADDRESS	
X00	PIO I/O Port A (READ-WRITE)
X01	PIO I/O Port B (READ-WRITE)
X10	PIO Local Interrupt Control (WRITE ONLY)
X11	PIO Timer (WRITE ONLY)

INPUT/OUTPUT PORTS

Each 3861 chip has two bidirectional 8-bit I/O ports. Each port's address, using binary notation, is XXXXXX00 or XXXXXX01, where the X binary digits are the chip's unique I/O port select code. Every 3861 used in a system must have a unique I/O port select code.

TIMER

The 3861 has a local timer to generate program initiated delays. To the programmer, the timer is an 8-bit register, addressable via F8 output instructions to the specified timer port address. Delay codes, calculated by the assembler, are loaded into the accumulator and then transferred to the timer (a polynomial shift register). An output instruction to the timer port number performs this function. After it is loaded, the timer counts down. A table of delay codes matched to delay times appears in the Appendix A.

The timer runs continuously. It signals the interrupt control circuitry after each timer cycle (3.953 ms in a 2MHz system). However, when an output instruction is executed with the timer port number as the operand, the timer is jammed with a specific count and the local interrupt control logic clears any stored timer interrupt. The timer then counts down from that count in a polynomial sequence (Appendix A) and generates an internal interrupt request when a count of H'FE' is reached. From that point, the timer continues to cycle every 3.953 milliseconds (for a 2MHz system) unless it is re-loaded as described above. If the interrupt is not set for timer interrupts, a timer initiated interrupt will be stored by the local interrupt control circuitry. When the local interrupt control logic is finally set to allow timer interrupts, the PIO will request interrupt service.

INTERRUPT INTERCONNECTION

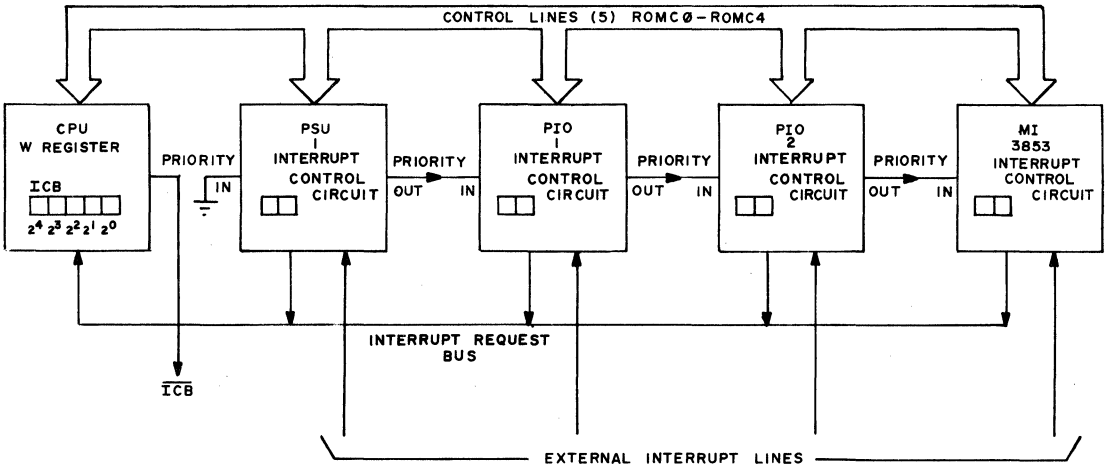

Figure 3.4.1

Time delays between 0 and 254 counts may be chosen. The timer is decremented once every 31 Φ clock cycles. Therefore, the counter may count as high as 7905 Φ clock cycles. (For a system at 2MHz, a clock cycle occurs every 500ns). Longer durations are achieved by counting multiple time interrupts. If the timer is loaded with all one's, it will stop counting.

INTERRUPT CONTROL PORT AND LOGIC

Figure 3.4.1 is a block diagram of the interrupt interconnection for a typical F8 system. The 3861 PIO, has either of two types of interrupts, internal or external. The internal interrupt may be generated by the programmable timer while the external interrupt is generated by external logic in the system. A local interrupt control cicuit containing two latches is included on each device. These latches are the Select Bit and the Interrupt Enable Bit.

Table 3.4.1

LOCAL INTERRUPT CONTROL BITS

2^1	2^0
Select Bit	Interrupt Enable Bit

These two bits have four possible states:

Select Bit	Interrupt Enable Bit	Function
0	0	No Interrupt
0	1	External Interrupt Enabled
1	0	No Interrupt
1	1	Timer (Internal) Interrupt Enabled

These control latches are loaded under program control using an output instruction. This loading clears the interrupt control logic, except for any pending timer interrupt. The operand for the OUT or OUTS instruction must be the predefined port number of the Interrupt Control Port (ICP). The two control bits allow each interrupt circuit to have independently controlled enable/disable capabilities. If enabled, the select bit may choose either internal (timer generated) interrupts or external interrupts.

Each PIO has a $\overline{\text{PRIORITY IN}}$ and a $\overline{\text{PRIORITY OUT}}$ line so that they may be daisy chained together in any order, to form a priority level of interrupts. When a PIO receives an interrupt (either timer or external) it pulls its $\overline{\text{PRI OUT}}$ output high, signaling all lower priority peripherals that it has a higher priority interrupt request impending on the CPU. Also when the PIO's $\overline{\text{PRI IN}}$ input is pulled high by a higher priority peripheral, signaling the PIO that there is a still higher priority interrupt request, it passes that signal along by pulling its $\overline{\text{PRI OUT}}$ high. When the CPU processes an interrupt request it commands the interrupting peripheral to place its interrupt vector address on the Data Bus. Only that peripheral whose $\overline{\text{PRI IN}}$ is low and who has an interrupt request impending will respond. Should there be another lower priority peripheral with an impending request, it will not respond at that time because its $\overline{\text{PRI IN}}$ input will be high.

To generate a timer interrupt, the timer must be set under program control. The PIO generates a timer interrupt request when the timer times out AND the interrupt control has been set (Select Bit = 1, Enable Bit = 1). The CPU will not process the request until 1, it is enabled to handle interrupts by setting the ICB bit in the status register, and 2, it has completed processing all higher priority interrupt requests. The timer may time out before ICB is set or the local interrupt control is enabled for internal interrupts; however, an interrupt will still be initiated after the required conditions have been met. Any pending timer interrupt is cleared whenver output instructions load the timer. The ICB is always cleared after the CPU has acknowledged an interrupt request.

The generation of an external interrupt request is also controlled by the local interrupt control circuit. If the Select Bit is set to zero and the Enable Bit is set to one, the control logic of the chip is responsive to the external interrupts. To guarantee an interrupt, the external interrupt line must drop from 1 (near V_{DD}) to 0 (near V_{SS}), and stay at zero for a minimum of two WRITE clock periods (4 μs for a 500 ns system clock). The ICB may or may not be set when this occurs. If it is not set, the request will be stored by the local interrupt control logic until the ICB is reenabled; however, the stored external interrupt request will be lost whenever the control bits are reloaded. However, loading the control bits does not clear a stored timer interrupt. The stored external interrupt request will be cleared after that interrupt is serviced.

Within each local interrupt control circuit there is a 16-bit interrupt address vector. This vector is the address to which the program counter will be set after an interrupt is acknowledged; hence, it is the address of the first executable instruction of the interrupt routine. The 3861 has an interrupt address which is particular to the version of the 3861 selected by the user. Fifteen bits are fixed. These are bits 0 through 6 and 8 through 15. Bit seven (2^7) is dependent upon the type of interrupt. This bit will be a 0 for internal timer generated interrupts and a 1 for external interrupts. When the interrupt logic sends an interrupt request signal and the CPU is enabled to service it, the normal state sequence of the CPU is interrupted at the end of an instruction. The CPU signals the interrupt circuits via the five control lines. The requesting local interrupt circuit sends a 16-bit interrupt address vector (from the interrupt address generator) onto the Data Bus in two consecutive bytes. The address is made available to the program counter via the address demultiplexer circuits. Simultaneously, the address is also made available to all other devices connected to the data bus. It is the address of the next instruction to be executed. The program counter (PC0) of each memory device is set with this new address while the stack register (PC1) is loaded with the previous contents of the program counter. The information in PC1 is lost. Thus, the next instruction to be executed is determined by the value of the interrupt address vector.

The Interrupt Control Bit (ICB) of the CPU (loaded in the W register) allows interrupts to be recognized. Clearing the ICB prevents acknowledgement of interrupts. The ICB is cleared during power on, external reset, and after an interrupt is acknowledged. The interrupt status of the PSU, PIO or MI devices are not affected by the execution of the DISABLE INTERRUPT (DI) instruction. At the conclusion of most instructions, the fetch logic checks the state of the Interrupt Request Line. If there is an interrupt, the next instruction fetch cycle is suspended and the system is forced into an interrupt sequence.

The CPU allows interrupts after all F8 instructions except the following:

(PK)	PUSH K
(PI)	PUSH IMMEDIATE
(POP)	POP
(JMP)	JUMP
(OUTS)	OUTPUT SHORT (Excluding OUTS 00 and 01)
(OUT)	OUTPUT
(EI)	SET ICB
(LR W, J)	LOAD THE STATUS REGISTER FROM SCRATCHPAD
POWER ON	

As a result, it is possible to perform one more instruction after the above CPU instructions without being interrupted.

DATA FLOW

Table 3.5.1 shows the function performed by the PIO for each ROMC command. Each function is entirely performed within one machine cycle (one cycle of the WRITE clock)

TABLE 3.5.1

The following ROMC states are decoded by the 3861 as indicated. All other ROMC states are decoded as "NO–OPERATION' (NO–OP).

Binary (ROMC4 ROMC3 ROMC2 ROMC1 ROMC0)	Hex	3861 FUNCTION
0 1 1 1 1	0F	If this circuit is interrupting and no higher priority circuit is interrupting, move the lower half of the interrupt vector on to the Data Bus and signal Bus use with $\overline{DBDR}$.
1 0 0 0 0	10	Place interrupt circuitry on an inhibit state that prevents altering the interrupt chain.

F8 Family

1 0 0 1 1	13	If this circuit is interrupting and no higher priority circuit is interrupting move the upper half of the interrupt vector on to the Data Bus and signal Bus use with $\overline{DBDR}$. In any case, remove priority interrupt circuitry from inhibit state.
1 1 0 1 0	1A	If contents of Data Bus in the previous were an address of an I/O port, the timer, or the Interrupt Control Port, move current contents of the Data Bus into that port. (Output Command).
1 1 0 1 1	1B	If contents of Data Bus in the previous cycle was an I/0 port address, move the contents of that port on to the Data Bus and signal Bus use with $\overline{DBDR}$ (Input Command).

3861 PIO VERSIONS

Each version of the 3861 is denoted by a MK 90----- number. This ninety thousand series number should be used when ordering or specifying a 3861 to insure that the proper version is understood. Thus, the complete part designation of a particular version of the 3861 is:

3861
MK90--------

The presently available versions of the 3861 are listed in table 4.0.1.

AVAILABLE VERSIONS OF THE 3861
TABLE 4.0.1

VERSION	PORT SELECT CODE	PORT NUMBERS (DERIVED FROM THE PORT SELECT CODE; HEX)	PORT OUTPUT TYPE	INTERRUPT ADDRESS	
				TIMER	EXTERNAL
MK 90001	000001	04 thru 07	Standard T^2Compatible	0600	0680
MK 90002	000010	08 thru 0B	Standard T^2 Compatible	0340	03C0
MK 90003	001000	20 thru 23	Standard T^2 Compatible	0320	03A0
MK 90004	001001	24 thru 27	Standard T^2 Compatible	0360	03E0
MK 90005	000001	04 thru 07	Standard T^2 Compatible	0020	00A0

F8 Family

ELECTRICAL SPECIFICATIONS

ABSOLUTE MAXIMUM RATINGS*

V_{GG}, EXT INT ..... –.3V to +15V
V_{DD} ..... –.3V to +7V
I/O PORT OPEN DRAIN OPTION ..... –.3V to +15V
ALL OTHER INPUTS AND OUTPUTS ..... –.3V to +7V
STORAGE TEMPERATURE ..... –55°C to +150°C
OPERATING TEMPERATURE ..... 0°C to 70°C

*All voltages are with respect to V_{SS}. Stresses above those listed may cause permanent damage to the device. Exposure to maximum rated stress for extended periods may impair the useful life of the device.

DC CHARACTERISTICS

V_{SS} = 0V, V_{DD} = 5V ± 5%, V_{GG} = 12V ± 5%
T_A = 0 to 70°C, unless otherwise noted.
Positive current is defined as conventional current flowing into the pin referenced.

SUPPLY CURRENTS

SYMBOL	PARAMETER	MIN	TYP	MAX	UNITS	TEST CONDITIONS
I_{DD}	V_{DD} Current		25	60	mA	f= 2MHz, Outputs unloaded
I_{GG}	V_{GG} Current		8	15	mA	f= 2MHz, Outputs unloaded

DATA BUS (DB0-DB7)

SYMBOL	PARAMETER	MIN	TYP	MAX	UNITS	TEST CONDITIONS
V_{IH}	Input High Voltage	3.5		V_{DD}	Volts	
V_{IL}	Input Low Voltage	V_{SS}		.8	Volts	
V_{OH}	Output High Voltage	3.9		V_{DD}	Volts	$I_{OH} = -100\mu A$
V_{OL}	Output Low Voltage	V_{SS}		.4	Volts	$I_{OL} = 1.6mA$ [1]
I_{IH}	Input High Current	0		1	μA	$V_{IN} = 6V$, 3-State mode
I_{OL}	Input Low Current	0		−1	μA	$V_{IN} = V_{SS}$, 3-State mode
C_I	Input Capacitance			10	pF	3-State mode

CLOCK LINES (Φ WRITE)

SYMBOL	PARAMETER	MIN	TYP	MAX	UNITS	TEST CONDITIONS
V_{IH}	Input High Voltage	4.0		V_{DD}	Volts	
V_{IL}	Input Low Voltage	V_{SS}		.8	Volts	
I_L	Leakage Current			1	μA	$V_{IN} = 6V$
C_I	Input Capacitance			10	pF	

PRIORITY IN AND CONTROL ($\overline{\text{PRI IN}}$, ROMCO – ROMC4)

SYMBOL	PARAMETER	MIN	TYP	MAX	UNITS	TEST CONDITIONS
V_{IH}	Input High Voltage	3.5		V_{DD}	Volts	
V_{IL}	Input Low Voltage	V_{SS}		.8	Volts	
I_L	Leakage Current			1	μA	$V_{IN} = 6V$
C_I	Input Capacitance			10	pF	

PRIORITY OUT ($\overline{\text{PRI OUT}}$)

SYMBOL	PARAMETER	MIN	TYP	MAX	UNITS	TEST CONDITIONS
V_{OH}	Output High Voltage	3.9		V_{DD}	Volts	$I_{OH} = -100\mu A$
V_{OL}	Output Low Voltage	V_{SS}		.4	Volts	$I_{OL} = 100\mu A$

INTERRUPT REQUEST ($\overline{\text{INT REQ}}$)

SYMBOL	PARAMETER	MIN	TYP	MAX	UNITS	TEST CONDITIONS
V_{OH}	Output High Voltage				Volts	Open Drain Output [1]
V_{OL}	Output Low Voltage	V_{SS}		.4	Volts	$I_{OL} = 1mA$
I_L	Leakage Current			1	μA	$V_{IN} = 6V$, Output device off
C_I	Input Capacitance			10	pF	Output device off

DATA BUS DRIVE ($\overline{\text{DBDR}}$)

SYMBOL	PARAMETER	MIN	TYP	MAX	UNITS	TEST CONDITIONS
V_{OH}	Output High Voltage					Open Drain Output
V_{OL}	Output Low Voltage	V_{SS}		.4	Volts	$I_{OL} = 1mA$
I_L	Leakage Current			1	μA	$V_{IN} = 6V$, Output device off
C_I	Input Capacitance			10	pF	Output device off

EXTERNAL INTERRUPT ($\overline{EXT\ INT}$)

SYMBOL	PARAMETER	MIN	TYP	MAX	UNITS	TEST CONDITIONS
V_{IH}	Input High Voltage	3.5			Volts	Internal pullup exsists
V_{IL}	Input Low Voltage			1.2	Volts	
V_{IC}	Input Clamp Voltage			15	Volts	I_{IH} = 185μA
I_{IL}	Input Low Current	–250		–750	μA	$V_{IN} = V_{SS}$
C_I	Input Capacitance			10	pF	

I/O PORT OPTION A (STANDARD PULLUP)

SYMBOL	PARAMETER	MIN	TYP	MAX	UNITS	TEST CONDITIONS
V_{OH}	Output High Voltage	3.9		V_{DD}	Volts	I_{OH} = –30μA
V_{OH}	Output High Voltage	2.9		V_{DD}	Volts	I_{OH} = –100μA
V_{OL}	Output Low Voltage	V_{SS}		.4	Volts	I_{OL} = 2mA
V_{IH}	Input High Voltage	2.9		V_{DD}	Volts	Internal Pullup to V_{DD} [2]
V_{IL}	Input Low Voltage	V_{SS}		.8	Volts	
I_{IL}	Input Low Current			–1.2	μA	V_{IN} = .4V [3]
C_I	Input Capacitance			10	pF	

I/O PORT OPTION (OPEN DRAIN)

SYMBOL	PARAMETER	MIN	TYP	MAX	UNITS	TEST CONDITIONS
V_{OH}	Output High Voltage					External Pullup
V_{OL}	Output Low Voltage	V_{SS}		.4	Volts	I_{OL} = 2mA
V_{IH}	Input High Voltage	2.9		V_{DD}	Volts	[2]
V_{IL}	Input Low Voltage	V_{SS}		.8	Volts	
I_L	Leakage Current			1	A	V_{IN} = 6V, Output device off
C_I	Input Capacitance			10	pF	

I/O PORT OPTION C (DRIVER PULLUP)

SYMBOL	PARAMETER	MIN	TYP	MAX	UNITS	TEST CONDITIONS
V_{OH}	Output High Voltage	3.75		V_{DD}	Volts	I_{OH} =-1 mA
V_{OL}	Output Low Voltage	V_{SS}		.4	Volts	I_{OL} = 2 mA

NOTES:

1. Pull up resistor to V_{DD} on CPU.
2. Hysteresis input circuit provides additional .3V noise immunity while internal/external pullup provides TTL compatibility.
3. Measured while I/O port is outputting a high level.

TIMING

All timing specified at V_{SS} = 0V, V_{DD} = 5V ± 5%, V_{GG} = 12V ± 5%, T_A = 70°C to 0°C.

CLOCK TIMING

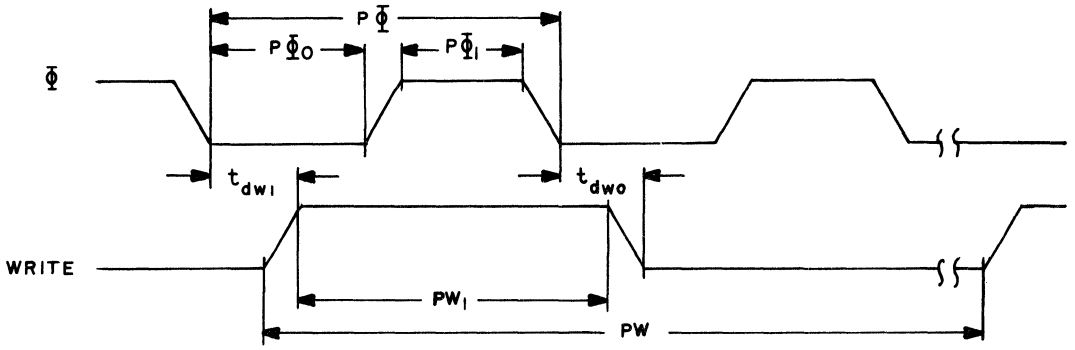

SYMBOL	PARAMETER	MIN	TYP	MAX	UNITS	CONDITIONS
PΦ	Clock Period	.5		10	μs	
$P\Phi_0$	Low time	180			ns	
$P\Phi_1$	High time	180			ns	
PW	WRITE Clock Period		4PΦ			Short cycle
PW_0	WRITE Clock Period		6PΦ			Long cycle
PW_1	WRITE Pulse Width	PΦ−100		PΦ		
t_{dw1}	Φ − to WRITE + delay			250	ns	
t_{dw0}	Φ − to WRITE − delay			225	ns	

F8 Family

OUTPUT TIMING

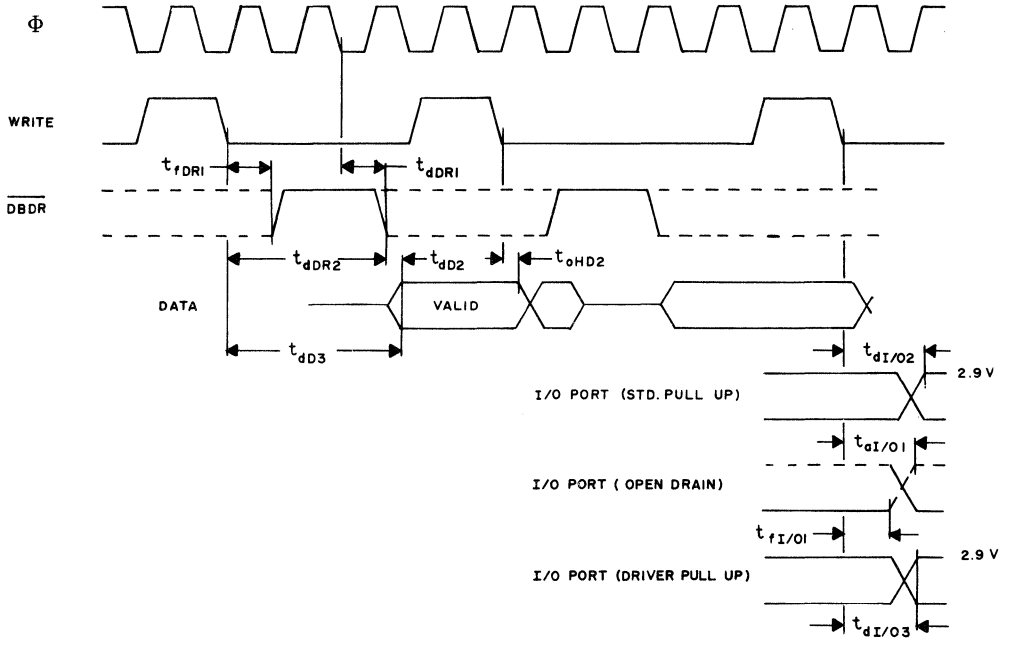

SYMBOL	PARAMETER	MIN	TYP	MAX	UNITS	CONDITIONS
t_{fDR1}	WRITE to DBDR floating			400	ns	
t_{dDR1}	Φ to DBDR 1-0		200	625	ns	C_L = 100pF, R_L = 12.5K
t_{dDR2}	WRITE to DBDR 1-0			2P Φ+ 625− tdw0	ns ns	C_L = 100pF, R_L = 12.5K C_L = 100pF
t_{dD3}	WRITE to DATA VALID	2P Φ− tdW0	2P Φ− 400	2P Φ+ 700− t_{dW0}	ns	C_L = 100pF
t_{0HD2}	Guaranteed Data Hold Time After Fall of WRITE	30			ns	
$t_{dI/02}$	WRITE to I/0 Port Valid			1.5	μs	STD Pull up, C_L = 50pF
$t_{dI/03}$	WRITE to I/0 Port Valid			400	ns	Driver Pullup, C_L = 50pF
$t_{d\ I/01}$	WRITE to I/0 Port-Actively Pulled Down			400	ns	Open Drain R_L = 12.5K, C_L = 50pF
$t_{fI/01}$	WRITE to I/0 Port-Floating			375	ns	Open Drain

F8 Family

INPUT TIMING

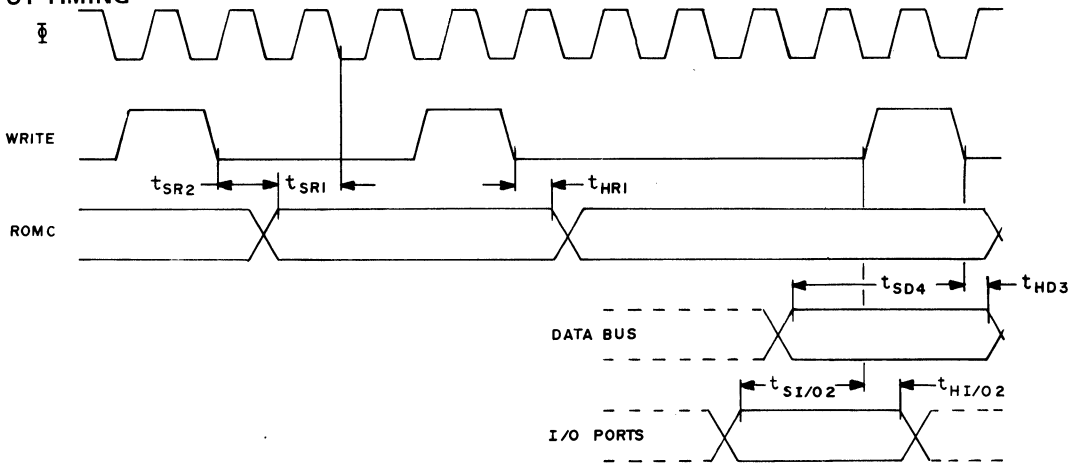

SYMBOL	PARAMETER	MIN	TYP	MAX	UNITS	CONDITIONS
t_{SR1}	ROMC Setup Time	225			ns	
t_{SR2}	ROMC Valid Measured From Fall of WRITE			550	ns	
t_{HR1}	ROMC Required Hold After Fall Of WRITE	20			ns	
t_{SD4}	Data Bus Set-up Time				ns	
t_{HD3}	Data Input Hold Time	20			ns	
$t_{SI/O2}$	I/0 Input Set-up Time	1.3			ns	
$t_{HI/O2}$	I/0 Input Hold Time	20			ns	

5.2.4 INTERRUPT TIMING

A. Request Made

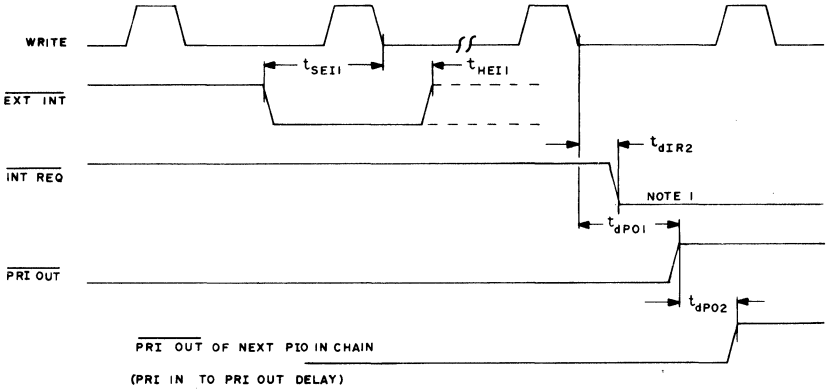

B. Request Allowed By CPU

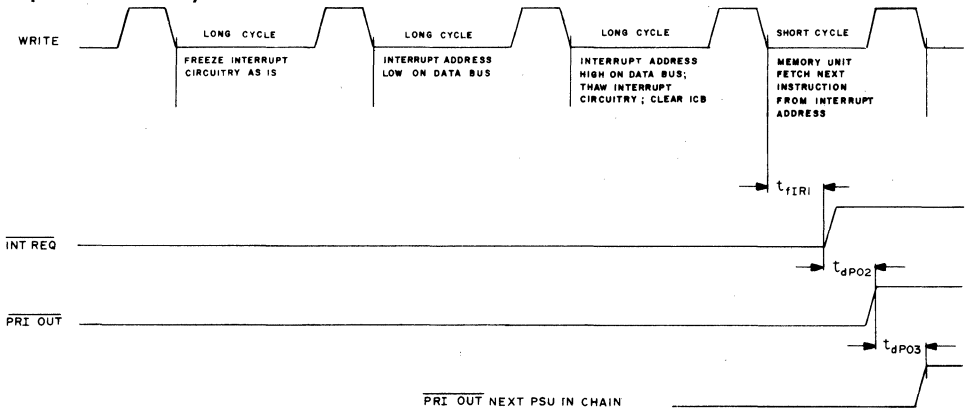

NOTES.

1. Assuming PRI IN is already low. If not, INT REQ 1–0 transition will be delayed 240ns max from the time PRI IN is enabled, and PRI OUT 0–1 transition will be delayed t_{dPO2} from the time PRI IN is enabled.

SYMBOL	PARAMETER	MIN	TYP	MAX	UNITS	CONDITIONS
t_{SEI1}	EXT INT Setup Time			1.3	ns	
t_{HEI}	EXT INT Hold Time	30			ns	
t_{dIR2}	WRITE to INT REQ Delay			430	ns	C_L = 100pF
t_{dPO1}	WRITE to PRI OUT Delay			640	ns	C_L = 50pF
t_{dPO2}	PRI IN to PRI OUT 0–1 Delay			300	ns	C_L = 50pF
t_{fIR1}	WRITE to INT REQ Float by PSU			640	ns	Open Drain Output
t_{dPO3}	PRI IN to PRI OUT 1–0 Delay			365	ns	C_L = 50pF

F8 Family

INTERFACING

STANDARD CONFIGURATION

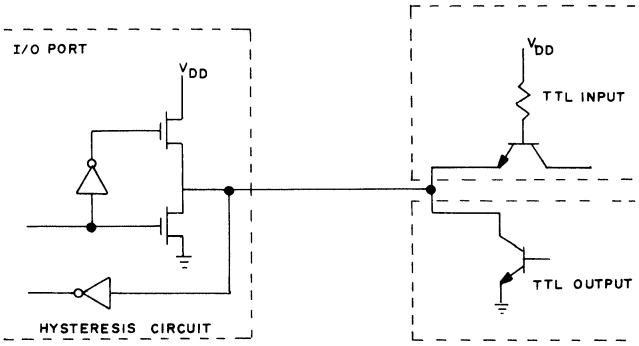

OPEN DRAIN CONFIGURATION

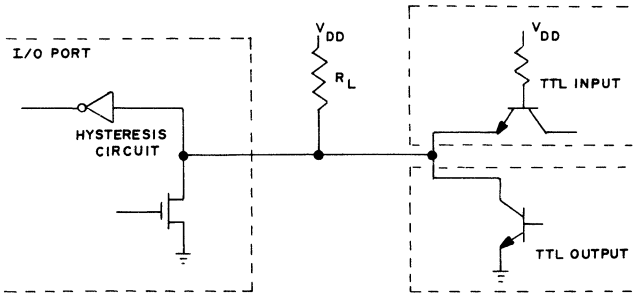

DRIVER PULL–UP CONFIGURATION

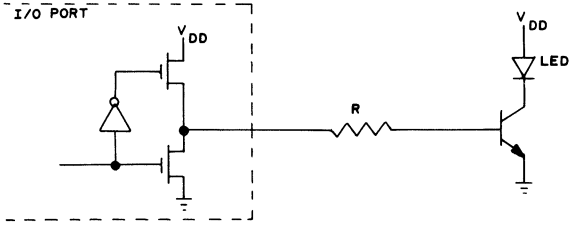

F8 Family

APPENDIX A-TIMER COUNTS

CONTENTS OF COUNTER	COUNTS TO INTERRUPT	CONTENTS OF COUNTER	COUNTS TO INTERRUPT	CONTENTS OF COUNTER	COUNTS TO INTERRUPT
FE	254	A4	198	70	142
FD	253	49	197	E1	141
FB	252	92	196	C3	140
F7	251	25	195	86	139
EE	250	4A	194	0C	138
DC	249	94	193	18	137
B8	248	29	192	31	136
71	247	53	191	63	135
E3	246	A6	190	C6	134
C7	245	4D	189	8C	133
8E	244	9A	188	19	132
1D	243	34	187	33	131
3B	242	69	186	67	130
76	241	D3	185	CE	129
ED	240	A7	184	9D	128
DA	239	4F	183	3A	127
B4	238	9E	182	74	126
68	237	3C	181	E9	125
D1	236	78	180	D2	124
A3	235	F0	179	A5	123
47	234	E0	178	4B	122
8F	233	C1	177	96	121
1F	232	82	176	2D	120
3F	231	04	175	5B	119
7E	230	09	174	B7	118
FC	229	12	173	6E	117
F9	228	24	172	DD	116
F3	227	48	171	BA	115
E6	226	90	170	75	114
CD	225	21	169	EB	113
9B	224	42	168	D6	112
36	223	85	167	AD	111
6D	222	0A	166	5A	110
DB	221	14	165	B5	109
B6	220	28	164	6A	108
6C	219	51	163	D5	107
D9	218	A2	162	AB	106
B2	217	45	161	56	105
64	216	8B	160	AC	104
C8	215	17	159	58	103
91	214	2E	158	B1	102
23	213	5D	157	62	101
46	212	BB	156	C4	100
8D	211	77	155	88	99
1B	210	EF	154	11	98
37	209	DE	153	22	97
6F	208	BC	152	44	96
DF	207	79	151	89	95
BE	206	F2	150	13	94
7D	205	E4	149	26	93
FA	204	C9	148	4C	92
F5	203	93	147	98	91
EA	202	27	146	30	90
D4	201	4E	145	61	89
A9	200	9C	144	C2	88
52	199	38	143	84	87

CONTENTS OF COUNTER	COUNTS TO INTERRUPT	CONTENTS OF COUNTER	COUNTS TO INTERRUPT
08	86	EC	30
10	85	D8	29
20	84	B0	28
40	83	60	27
81	82	C0	26
02	81	80	25
05	80	00	24
0B	79	01	23
16	78	03	22
2C	77	07	21
59	76	0F	20
B3	75	1E	19
66	74	3D	18
CC	73	7A	17
99	72	F4	16
32	71	E8	15
65	70	D0	14
CA	69	A1	13
95	68	43	12
2B	67	87	11
57	66	0E	10
AE	65	1C	9
5C	64	39	8
B9	63	72	7
73	62	E5	6
E7	61	CB	5
CF	60	97	4
9F	59	2F	3
3E	58	5F	2
7C	57	BF	1
F8	56	7F	0
F1	55		
E2	54		
C5	53		
8A	52		
15	51		
2A	50		
55	49		
AA	48		
54	47		
A8	46		
50	45		
A0	44		
41	43		
83	42		
06	41		
0D	40		
1A	39		
35	38		
6B	37		
D7	36		
AF	35		
5E	34		
BD	33		
7B	32		
F6	31		