MOSTEK®

F8 MICROPROCESSOR DEVICES

Program Storage Unit MK3851

FEATURES

- ☐ 1024 x 8 ROM storage
- ☐ Two 8-bit I/O Ports
- ☐ Programmable timer
- ☐ External/timer interrupt circuitry
- ☐ Low power dissipation < 275mW typical

GENERAL DESCRIPTION

The MK 3851 program storage unit (PSU) provides 1024 bytes of read only memory (ROM) for the F8 system. Additionally each PSU provides two 8-bit I/O ports, a programmable timer and vectored timer and external interrupts. The PSU contains three 16-bit address registers and a 16-bit incrementer/adder. On command from the F8 CPU the MK 3851 accesses its internal memory using one of these three registers and increments or adds displacement to the register if required.

The MK 3851 PSU is manufactured using N-channel Isoplanar MOS technology. Power dissipation is very low, typically less than 275mW.

PIN NAME	DESCRIPTION	TYPE
$\overline{\text{I/O A0-I/O A7}}$	I/O Port A	Bi-directional
$\overline{\text{I/O B0-I/O B7}}$	I/O Port B	Bi-directional
DB0-DB7	Data Bus	Bi-directional, tri-state
ROMC0-ROMC4	Control Lines	Input
Φ, WRITE	Clock Lines	Input
$\overline{\text{EXT INT}}$	External Interrupt	Input
$\overline{\text{PRI IN}}$	Priority In	Input
$\overline{\text{PRI OUT}}$	Priority Out	Output
$\overline{\text{INT REQ}}$	Interrupt Request	Output
$\overline{\text{DBDR}}$	Data Bus Drive	Output
V_{SS}, V_{DD}, V_{GG}	Power Supply Lines	Input

F8 FAMILY

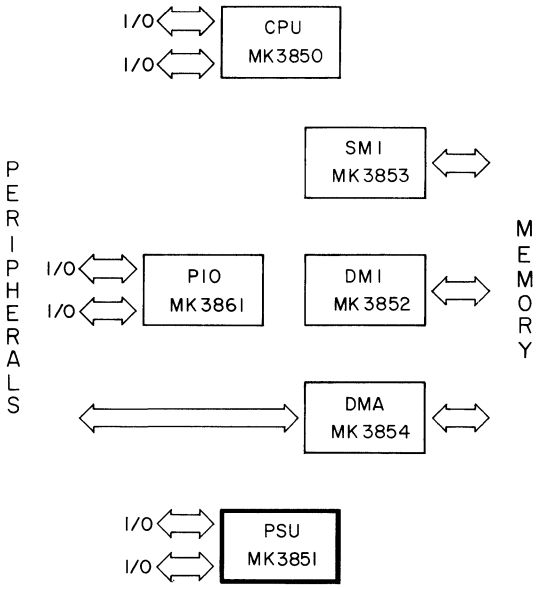

PIN CONNECTIONS

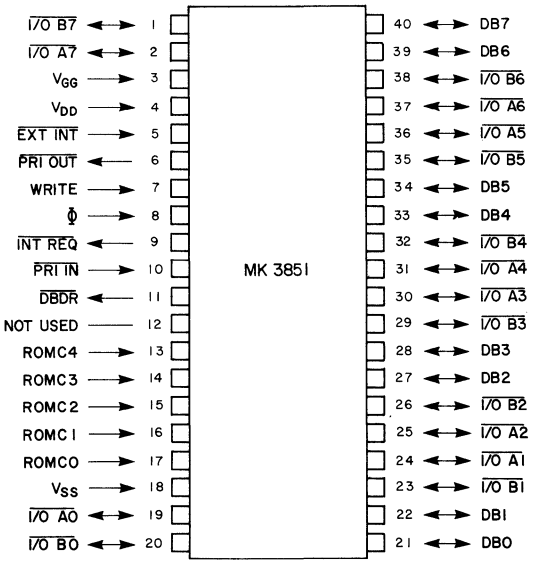

F8 Family

FUNCTIONAL DIAGRAM

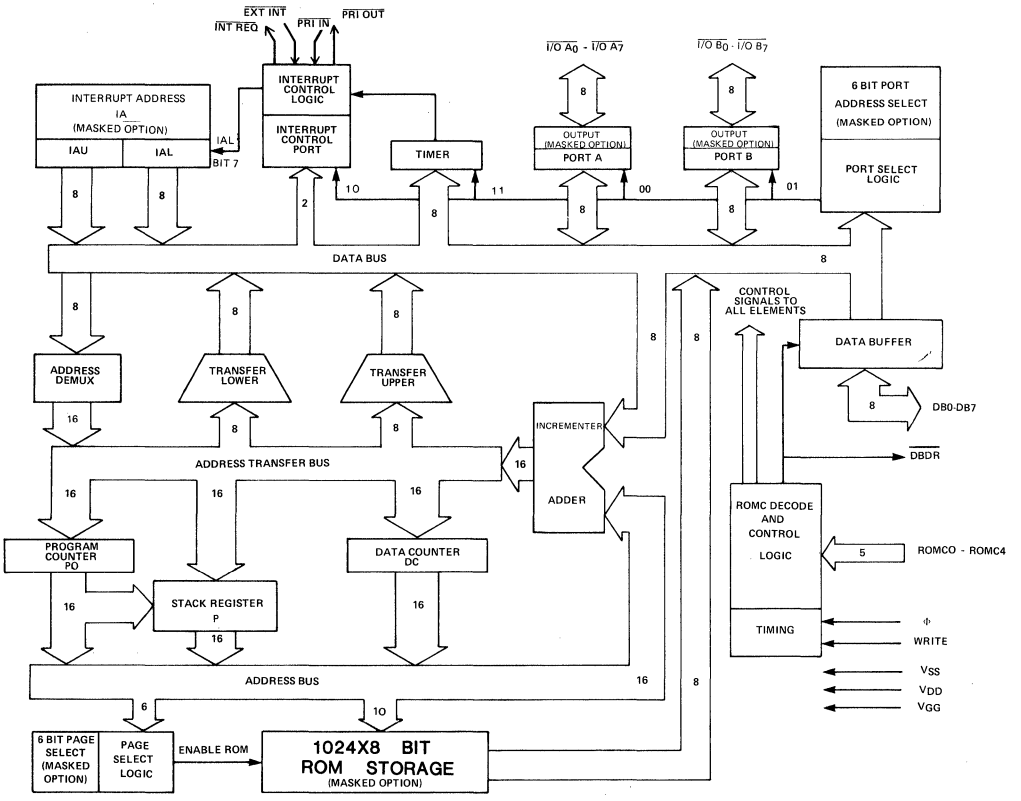

Figure 1

FUNCTIONAL PIN DESCRIPTION

Φ and WRITE are clock inputs generated by the MK 3850 CPU.

ROMC0 through ROMC4 are control inputs generated by the MK 3850 CPU.

DB0 through DB7 are bi-directional data bus lines which link the MK 3851 PSU with all other devices in the F8 system.

$\overline{\text{INT REQ}}$. This signal is connected to the $\overline{\text{INT REQ}}$ input on the 3850 CPU. $\overline{\text{INT REQ}}$ is output low to interrupt the MK 3850 CPU. This occurs only if $\overline{\text{PRI IN}}$ is low, and MK 3851 PSU interrupt control logic is requesting an interrupt.

$\overline{\text{EXT INT}}$. A high to low transition on this signal is recognized by the MK 3851 as an interrupt request from an external device.

$\overline{\text{PRI IN}}$. This input must be low to allow the MK 3851 PSU to set $\overline{\text{INT REQ}}$ low in response to an interrupt.

$\overline{\text{PRI OUT}}$. This signal is connected to $\overline{\text{PRI IN}}$ on the next device in the interrupt priority daisy chain. $\overline{\text{PRI OUT}}$ is output high unless $\overline{\text{PRI IN}}$ is entering the MK 3851 PSU low, and the MK 3851 PSU is not requesting an interrupt.

$\overline{\text{I/O A0}}$ through $\overline{\text{I/O A7}}$ and $\overline{\text{I/O B0}}$ through $\overline{\text{I/O B7}}$ are two Input/Output bi-directional ports through which the MK 3851 PSU communicates with logic external to the microprocessor system.

$\overline{\text{DBDR}}$ is low when the MK 3851 PSU is outputting data on the data bus (DB0-DB7). $\overline{\text{DBDR}}$ is an open drain signal.

DEVICE ORGANIZATION

This section describes the operation of the basic functional elements of the MK 3851 PSU. These elements are shown on the PSU functional block diagram. (Fig.1)

ROM STORAGE

The MK 3851 PSU has 1024 bytes of read-only memory. This ROM array may contain object program code and/or tables of non-varying data. Every MK 3851 PSU is implemented using a custom mask which specifies the state of every ROM bit, as well as certain address mask options which are external to the ROM array.

THE PROGRAM COUNTER (P0) AND DATA COUNTER (DC)

The MK 3851 PSU addressing logic consists primarily of two 16-bit registers: the program counter (P0) and the data counter (DC).

The program counter will at all times address the memory word from which the next object program code must be fetched. The data counter addresses memory words containing individual data bytes or bytes within data tables to be used as operands. The mechanism whereby an address is decoded by the MK 3851 PSU logic is identical, whether the address originated in P0 or in DC.

Recall that P0 always addresses the memory location out of which the next object program instruction byte will be read. If the instruction requires data (an operand) other than an immediate operand to be accessed, DC must address memory. P0 cannot be used to address a non-immediate operand since P0 is saving the address of the next instruction code.

THE STACK REGISTER

The MK 3851 PSU addressing logic contains a third 16-bit register, called the stack register. The stack register is labeled P on Figure 1. The stack register is a buffer for the program counter P0. The contents of the stack register are never used directly to address memory.

The following instructions access P:

LR K,P	MOVE THE CONTENTS OF P TO THE CPU SCRATCHPAD K REGISTERS
LR P,K	MOVE THE CONTENTS OF THE CPU K SCRATCHPAD REGISTERS TO P
PK	SAVE THE CONTENTS OF P0 IN P THEN MOVE THE CONTENTS OF CPU SCRATCHPAD REGISTERS 12 AND 13 TO P0
PI H'aaaa'	MOVE THE CONTENTS OF P0 TO P THEN LOAD THE HEXADECIMAL VALUE INTO P0
POP	MOVE THE CONTENTS OF P TO P0

In addition, when an interrupt is acknowledged, the contents of P0 are saved in P.

PAGE SELECT LOGIC

All memory addresses are 16-bits wide, whether the memory address originates in the program counter or the data counter. Addressing logic within the MK 3851 PSU separates the 16-bit address into two portions. The low-order 10 bits address one of the PSU's 1024 bytes of ROM storage. The high order 6-bits constitute a page select.

Every MK 3851 PSU has a 6-bit page select register, which is a mask option that must be specified when the PSU ROM chip is ordered. If the high order six bits of the address match the page select mask, an enable signal will be generated which causes PSU logic to respond to a memory access request. If the high order 6-bits of the address do not match the page select, no enabling signal is generated and the PSU will not respond to memory access requests.

The 6-bit page select register may be looked upon as identifying the memory addressing space of the individual MK 3851 PSU device. Each of the 64 page select options allowed by the 6-bit page select register identifies a single address space consisting of 1024 contiguous memory addresses. Following are two examples:

Page Select Mask:
0 0 0 0 0 0

PSU Address Space:
0 0 0 0 0 0 0 0 0 0 0 0 0 0 0 0 H'0000'
0 0 0 0 0 0 1 1 1 1 1 1 1 1 1 1 through
H'03FF'

Page Select Mask:
0 0 1 0 1 1

PSU Address Space:
0 0 1 0 1 1 0 0 0 0 0 0 0 0 0 0 H'2C00'
0 0 1 0 1 1 1 1 1 1 1 1 1 1 1 1 through
H'2FFF'

Six high order address bits — Ten low order address bits

INCREMENTER ADDER LOGIC

There are only two arithmetic operations that memory devices need to perform on the contents of memory address registers:

1. Increment by 1 the 16-bit value stored in an address register.
2. Add an 8-bit value, treated as a signed binary number (subject to twos complement arithmetic) to the 16-bit value stored in an address register.

The incrementer adder logic performs these two functions in the MK 3851 PSU.

INTERRUPT LOGIC

This logic responds to an interrupt request signal which may originate internally from timer logic, or be input by an external device. Based on priority considerations, the interrupt request is passed on to the MK 3851 CPU.

TIMER LOGIC

Every MK 3851 PSU has a polynomial shift register which may be used in conjunction with interrupt logic to generate real-time intervals.

Upon counting down to zero, the timer uses interrupt logic to signal that it has timed out.

The timer is programmable and is handled as though it were an I/O port. Using an OUT or OUTS instruction, a value may be loaded into the timer in order to determine the real-time period at the end of which a time-out interrupt will be generated.

THE DATA BUS

The 8-bit data bus is the main path for transfer of information between the MK 3850 CPU and other devices in the F8 microprocessor system. It is identified in Figure 1 by data lines DB0-DB7.

I/O PORTS

Every MK 3851 PSU has four, 8-bit I/O ports. Associated with the I/O ports is an I/O port address select register. This is a 6-bit register, the contents of which is a PSU mask option, that must be specified at the time the MK 3851 PSU is ordered.

Two of the four I/O ports, identified as I/O ports A and B in Figure 1, are used to transfer data to or from external devices. A third I/O port is assigned to the programmable timer while the fourth port is the Interrupt Control Port.

The four I/O ports of any MK 3851 PSU are addressed by an 8-bit I/O port address. The high order 6 bits are specified by the I/O port address select code with the remaining 2 bits identifying the particular I/O port as following:

XXXXXX00 I/O Port A
XXXXXX01 I/O Port B
XXXXXX10 Interrupt control
XXXXXX11 Programmable Timer

XXXXXX represents a six bit PSU mask option. For example, if the six are 000010, the four I/O port addresses are H'08', H'09', H'0A' and H'0B'.

When a logic "1" is output to I/O port A or B, it places a 0 volt level on the output pin. This same negative true logic also applies to input. The I/O ports, timer, and interrupt control ports are not initialized during the power on reset.

F8 Family

MASK OPTIONS

The following mask options must be specified for every MK 3851 PSU:

1. The 1024 bytes of ROM storage. This will reflect programs and permanent data tables stored in the PSU memory.
2. The 6-bit page select. This defines the PSU address space
3. The 6-bit I/O port address select. This defines the four PSU I/O port addresses.
4. The 16-bit interrupt address vector, excluding bit 7.
5. The I/O port output option. The choices are the standard Pull-up (Option A), the Open-Drain (Option B) and the Driver Pull-up (Option C)

OPERATIONAL DESCRIPTION

CLOCK TIMING

All timing within the MK 3851 PSU is controlled by Φ and WRITE, which are input from the MK 3850 CPU.

The WRITE clock refreshes and updates MK 3851 PSU address registers, which are dynamic.

The Φ clock drives sequencing logic to precharge the ROM matrix. The Φ clock also drives the programmable timer.

INSTRUCTION EXECUTION

The MK 3851 PSU responds to signals which are output by the MK 3850 CPU in the course of executing instruction cycles.

Table 1 summarizes the response of the MK 3851 PSU to the ROMC states.

MEMORY ADDRESSING

Those ROMC states which specify a memory access call for only one memory device to respond to the memory access operation. However, every memory device responds to ROMC states that call for modification of program counter or data counter register contents. Consider two examples:

1. ROMC state 5 specifies that the data counter (DC) register contents must be incremented. Every memory device will simultaneously receive this ROMC state, and will simultaneously increment the contents of its DC register.
2. ROMC state 0 is the standard instruction fetch. Only the memory device whose address space includes the current contents of the program counter (P0) registers will respond to this ROMC state by accessing memory and placing the contents of the addressed memory word on the 8-bit data bus. However, every memory device will increment the contents of its P0 register, whether or not the P0 register contents are within the memory space of the device.

When all memory devices connected to the 8-bit data bus of a MK 3850 CPU are also connected to the ROMC control lines of the same CPU, the memory devices simultaneously receive the same ROMC state signals from the CPU and respond to ROMC states by identically modifying the contents of memory address registers. Therefore the P0 register on all memory devices contain identical information. The same holds true for DC and P registers.

Only the memory device whose address space includes the specified memory address, will respond to any memory access request. To avoid addressing conflicts, it is necessary to insure that the following three conditions exist:

1. Memory devices must receive the ROMC state signals from one CPU.
2. Page select masks must not be duplicated. (More than one memory device cannot have the same memory space).
3. The memory address contained in the specified register (P0 or DC) must be within the memory space of a memory device.

DATA OUTPUT BY THE PSU

Figure 10 shows the timing when the MK 3851 PSU outputs data on the data bus. This timing applies whenever a MK 3851 PSU is the data source. The MK 3851 PSU always places data on the data bus in time for the set-up required by an MK 3850 CPU destination.

ROMC STATES ROMC (Hexadecimal)	OPERATION PERFORMED	COMMENT
00	DB ← ((P0)) ; P0←P0 +1	OP CODE, FETCH
01	DB ← ((P0)) ; P0←P0 +DB	BRANCH OFFSET FETCH
02	DB ←((DC)); DC←DC+1	
03	DB ←((P0)) ; P0←P0+1	IMMEDIATE OPERAND FETCH
04	P0 ←P	
05	((DC))←DB ; DC←DC+1	MK 3851:DC←DC+1 ONLY
06	DB←DCU	
07	DB←PU	
08	P←P0 ; DB←H'00'; P0L, P0H← DB	EXTERNAL RESET
09	DB ←DCL	
0A	DC ←DC+DB	
0B	DB ←PL	
0C	DB ←((P0)) ; DCL←DB	
0D	P←P0+1	
0E	DB←((P0)) ; DCL←DB	
0F	P←P0 ; DB←IAL ; P0L←DB	LOWER BYTE OF ADDRESS VECTOR
10	FREEZE INTERRUPT STATUS	PREVENT ADDRESS VECTOR CONFLICTS
11	DB ←((P0)) ; DCU←DB	
12	P0L←DB ; P←P0	
13	DB←IAU; P0U←DB	UPPER BYTE OF ADDRESS VECTOR
14	P0U←DB	
15	PU←DB	
16	DCU←DB	
17	P0L ←DB	
18	PL←DB	
19	DCL←DB	
1A	((pp))←DB or ((p))←DB	
1B	DB←(pp)) or DB←((p))	
1C	NO OPERATION	
1D	DC ⇄ DC1	MK 3851: NO OPERATION
1E	DB←P0L	
1F	DB←P0U	

Definitions

DB	-	Data Bus	IA	-	Interrupt address vector
P0	-	Program Counter	L	-	Lower byte suffix
DC	-	Data Counter	U	-	Upper byte suffix
P	-	Stack Register	( )	-	Contents of
pp	-	Two hex digits (long I/O port address)	←	-	transfer to
p	-	One hex digit (short I/O port address)	⇄	-	exchange

Table 1

Observe that $\overline{DBDR}$ is low while data output by the MK 3851 PSU is stable on the data bus. Thus $\overline{DBDR}$ low indicates that the data bus currently contains data flowing from a MK 3851 PSU. For systems with more than one MK 3851 PSU the $\overline{DBDR}$ outputs may be wire-ORed and the result may be used as a bus data flow direction indicator. $\overline{DBDR}$ may remain low until td8 into the instruction cycle following the one in which $\overline{DBDR}$ was set low.

DATA INPUT TO THE PSU

The worst case timing for the MK 3851 PSU receiving data from the data bus is when the data must be added to a 16 bit number within the PSU's Incrementer Adder. This worst case corresponds to data coming from the accumulator in the CPU for an ADC instruction or from a memory device for a BR instruction. For this worst case, arriving data must allow sufficient time for 16-bit Adder logic.td4 in Figure 10 identifies this worst case timing.

INPUT/OUTPUT INTERFACING

The two PSU I/O ports with addresses xxxxxx00 and xxxxxx01 (xxxxxx is the 6-bit I/O port address select) may be used to transmit data between the PSU and external devices. IN and INS instructions

F8 Family

STANDARD PULL–UP CONFIGURATION

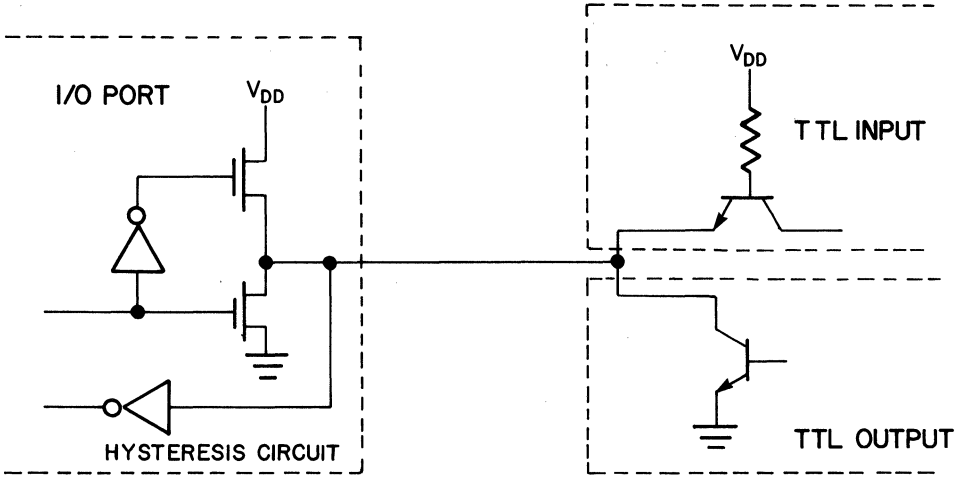

Figure 2

OPEN DRAIN CONFIGURATION

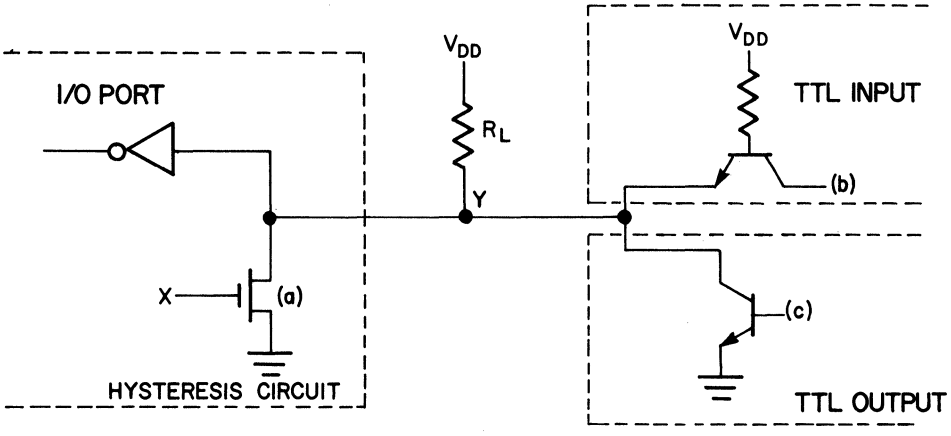

Figure 3

DRIVER PULL–UP CONFIGURATION

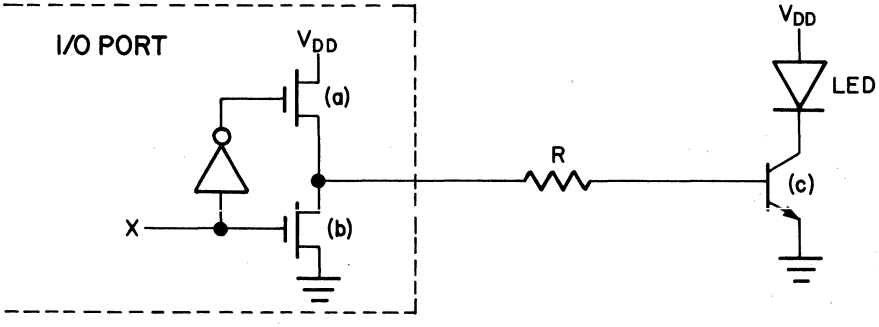

Figure 4

cause data at the I/O ports to be transmitted to the CPU. OUT and OUTS instructions cause data in the CPU's accumulator to be loaded into an I/O port latch.

Data bus timing associated with the execution of I/O instructions does not differ from data bus timing associated with any other data transfer to or from the PSU. However, timing at the I/O port depends on which port option is being used. Figures 2,3 and 4 illustrate the three port options. Figure 11 illustrates timing for the three cases. Figure 2 illustrates the standard pull-up configuration.

When the I/O port is configured as shown in Figure 3 the drain connection of FET (a) is "open", (not connected to V_{DD} through a pull-up transistor). This option is most useful in applications where several signals (possibly several I/O port lines) are to be wire-ORed together. A common external pull-up, R_L, is used to establish the 2 high output levels. Another advantage of this option is that the output (point Y) may be tied through a pull-up resistor to a voltage higher than V_{DD} (up to V_{GG}) for interfacing to external circuits requiring a higher level than V_{DD} would provide. The process of inputting and outputting with this configuration can be described as follows:

If a high level is present at point X, (this would be coming from the port latch), FET (a) will conduct and pull point Y to a low level by current flow through R_L. This low level at Y will cause transistor (b) to turn on and present a low level to the input TTL circuit. If a low level is present at X, FET (a) will turn off and point Y will be pulled toward V_{DD} by R_L. This causes transistor (b) to turn off and present a high level to the internal TTL circuits.

When data is input, a high level at the base of transistor (c) causes it to conduct and pull point Y low. This transfers a high level to the internal I/O port logic through the inverting hysteresis circuit. If a low level is present at the base of (c), conduction stops and point Y is pulled toward V_{DD} by R_L. This is then transferred as a low level to the internal I/O port logic through the hysteresis circuit.

Figure 4 shows the I/O port driver pull-up option shown driving a LED indicator. This application is typical of a front-panel address or data display, where a row of LED indicators shows the logic state of an I/O port. In this case, a high level at X turns FET (b) on and (a) off, providing a path for current through resistor R from the base of transistor (c). This stops (c) from conducting and the LED does not light. However, if a low level is present at X, (b) turns off and (a) turns on, providing a path for current from V_{DD} through (a) to R. This current through R turns on (c), causing the LED to conduct and be lit.

The three options for I/O port output configurations described above are provided to aid the designer in optimizing (minimizing) the system hardware for his particular application. The option is specified as a mask option by the designer.

THE PROGRAMMABLE TIMER

The MK 3851 PSU has an 8-bit shift register, addressable as I/O port xxxxxx11, which may be used as a programmable timer. (xxxxxx is the 6-bit I/O port address select, a PSU mask option.) Figure 5 illustrates the shift register logic and the exclusive-OR feedback path.

CONVERSION OF TIMER COUNTS INTO TIMER CONTENTS

	0	1	2	3	4	5	6	7	8	9
0	7F	BF	5F	2F	97	CB	E5	72	39	1C
1	0E	87	43	A1	D0	E8	F4	7A	3D	1E
2	0F	07	03	01	00	80	C0	60	B0	D8
3	EC	F6	7B	BD	5E	AF	D7	6B	35	1A
4	0D	06	83	41	A0	50	A8	54	AA	55
5	2A	15	8A	C5	E2	F1	F8	7C	3E	9F
6	CF	E7	73	B9	5C	AE	57	2B	95	CA
7	65	32	99	CC	66	B3	59	2C	16	0B
8	05	02	81	40	20	10	08	84	C2	61
9	30	98	4C	26	13	89	44	22	11	88
10	C4	62	B1	58	AC	56	AB	D5	6A	B5
11	5A	AD	D6	EB	75	BA	DD	6E	B7	5B
12	2D	96	4B	A5	D2	E9	74	3A	9D	CE
13	67	33	19	8C	C6	63	31	18	0C	86
14	C3	E1	70	38	9C	4E	27	93	C9	E4
15	F2	79	BC	DE	EF	77	BB	5D	2E	17
16	8B	45	A2	51	28	14	0A	85	42	21
17	90	48	24	12	09	04	82	C1	E0	F0
18	78	3C	9E	4F	A7	D3	69	34	9A	4D
19	A6	53	29	94	4A	25	92	49	A4	52
20	A9	D4	EA	F5	FA	7D	BE	DF	6F	37
21	1B	8D	46	23	91	C8	64	B2	D9	6C
22	B6	DB	6D	36	9B	CD	E6	F3	F9	FC
23	7E	3F	1F	8F	47	A3	D1	68	B4	DA
24	ED	76	3B	1D	8E	C7	E3	71	B8	DC
25	EE	F7	FB	FD	FE	FF halts timer				

Each timer count = 15.5 μs at 2MHz

Table 2

Based on the logic illustrated in Figure 5 binary values in the range 0 through 254 when loaded into the timer, are converted into "timer counts", as shown in table 2. Table 2 contains the actual (HEX) value loaded into the timer, and the column/row is the corresponding decimal number of time intervals the timer will take to time out. Data cannot be read out of the programmable timer I/O port.

Either the OUT or OUTS instruction is used to load "timer counts" into the programmable timer. The contents of the programmable timer can not be read using an IN or INS instruction. The timer will time out after a time interval given by the product:
(period of clock Φ) X (timer counts) X 31

For example, a value of H 'C8' loaded into the programmable timer becomes 215 timer counts. The timer will therefore time out in 3.33 milliseconds, if the period of clock signal Φ is 500 nanoseconds.

A value of H'FF' loaded into the programmable timer will stop the timer. This is because the timer shift

TIMER LOGIC DIAGRAM

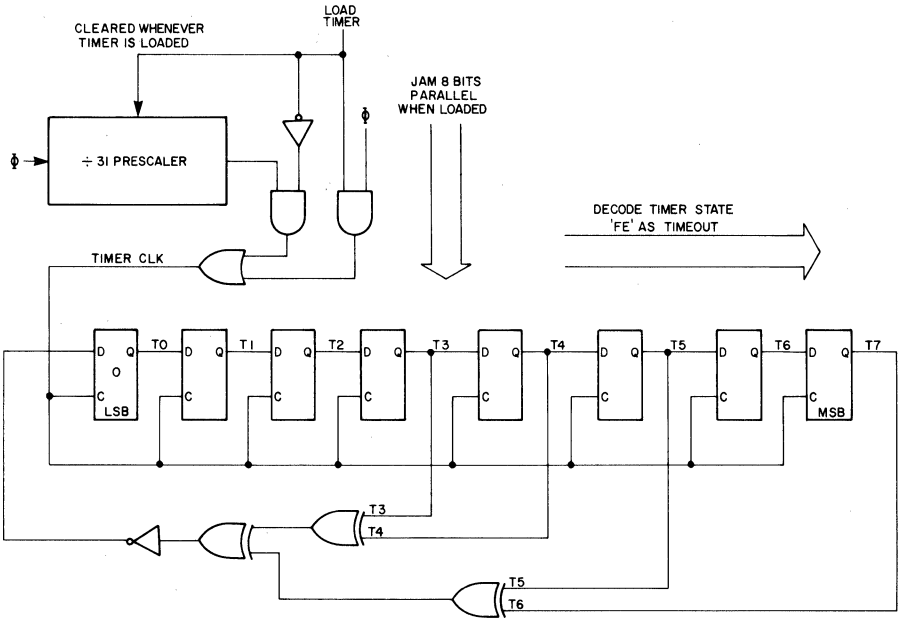

Figure 5

register feedback gates will always present a logic 1 to the D input of the LSB flip-flop (fig. 5). Therefore the timer will retain a value to H'FF' and a H'FE' will never be decoded to cause a time out.

The timer runs continuously unless it has been stopped by loading H'FF' into it. Upon timing out, the timer transmits an interrupt request to the interrupt logic. If proper interrupt logic conditions exist, the timer interrupt request is passed on to the CPU via $\overline{\text{INT REQ}}$.

After the programmable timer has timed out it will again time out after 255 time counts. Therefore if the programmable timer is simply left running, it will time out every 7905 Φclock periods, or every 3.9525 milliseconds for a 500 nanosecond clock.

Whenever the timer and timer interrupt are being set to time a new interval, the timer should be loaded before enabling the timer interrupt. The act of loading the timer clears any pending timer interrupts. When the timer interrupt is enabled, any pending timer interrupt will be acknowledged and forwarded to the CPU. Since the timer runs continuously (unless stopped under program control) enabling the timer before loading a time count can cause a spurious interrupt. Time outs of the timer are latched in the interrupt logic of the PSU, even while timer interrupts are disabled. When the timer is enabled, an immediate interrupt acknowledge will occur if the continuous running timer timed out while timer interrupts were disabled.

If the timer is loaded just prior to enabling timer interrupts a spurious interrupt request will not exist when the timer interrupt is enabled.

Figure 6 illustrates a possible sequence for a timer which is initially loaded with H'C8' then allowed to run continuously.

INTERRUPT LOGIC ORGANIZATION

The Interrupt Control Port has the I/O port address xxxxxx10, where xxxxxx is the 6-bit I/O port address select. Data is loaded into this register (I/O port) using an OUT or OUTS instruction. Data cannot be read from this port. The contents of the Interrupt Control Port are interpreted as follows:

CONTENTS OF INTERRUPT CONTROL PORT	FUNCTION
B'xxxxxx00'	Disable all interrupts
B'xxxxxx01'	Enable external interrupt, disable timer interrupt
B'xxxxxx10'	Disable all interrupts
B'xxxxxx11'	Disable external interrupt, enable timer interrupt

In the above I/O port contents definitions x represents "don't care" bits.

Depending on the contents of the Interrupt Control Port, a MK 3851 PSU's interrupt control logic can be accepting timer interrupts, or external interrupts, or neither, but never both.

Figure 7 is a conceptual logic diagram of the PSU's interrupt logic. Between the $\overline{\text{EXT INT}}$ input or the time-out input and the output $\overline{\text{INT REQ}}$, there are 4 flip-flops. $\overline{\text{EXT INT}}$ and the time-out interrupt input each have 2 synchronizing flip-flops to detect the active edge.

TIME OUT AND INTERRUPT REQUEST

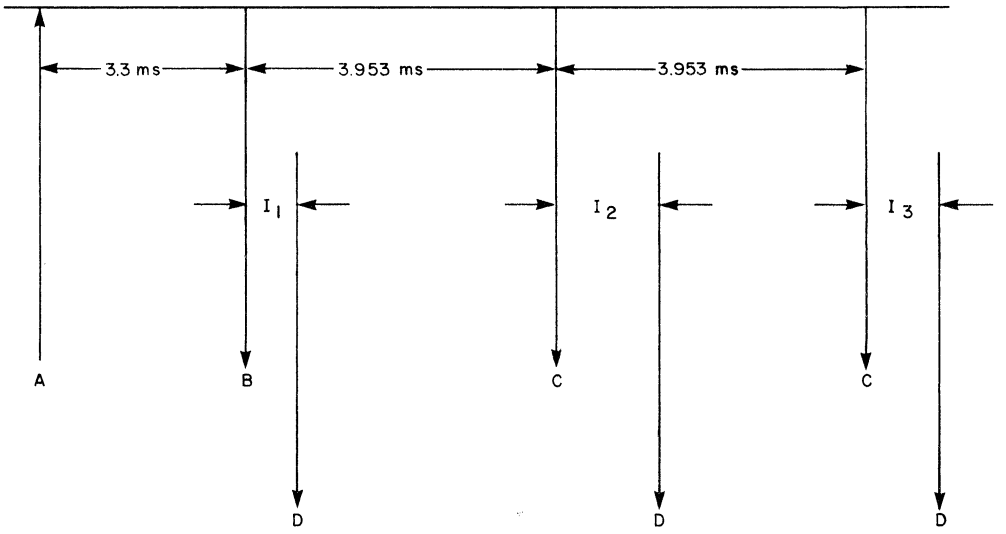

Figure 6

Each edge detect circuit is followed by its own INTERRUPT flip-flop which latches the true condition.

The outputs of the TIMER INTERRUPT flip-flop and the EXTERNAL INTERRUPT flip-flop are ORed to set the SERVICE REQUEST flip-flop, providing that an interrupt from some other PSU is not being acknowledged by the CPU.

$\overline{\text{INT REQ}}$ is the NAND of PRI IN and SERVICE REQUEST.

$\overline{\text{INT REQ}}$ is an open drain signal. The $\overline{\text{INT REQ}}$ signal of several PSU's may be tied together so that any one can force the line to 0V if it is requesting interrupt service. A pull-up to V_{DD} is provided by the MK 3850 CPU to $\overline{\text{INT REQ}}$ input pin.

$\overline{\text{PRI IN}}$ is part of the interrupt priority chain. The chain begins by a strap to V_{SS}. Each device in the chain has a $\overline{\text{PRI IN}}$ input and $\overline{\text{PRI OUT}}$ output. $\overline{\text{PRI OUT}}$ of the PSU will be true (0V) only if $\overline{\text{PRI IN}}$ is true (0V) and SERVICE REQUEST is false. This means that when $\overline{\text{PRI IN}}$ is true (0V), $\overline{\text{PRI OUT}}$ and $\overline{\text{INT REQ}}$ are always at opposite levels. $\overline{\text{PRI OUT}}$ is connected to $\overline{\text{PRI IN}}$ on the next device in the interrupt priority daisy chain, if there is one. The function of the priority daisy chain is to insure that just one device at a time be requesting interrupt service.

The SERVICE REQUEST flip-flop cannot be set if another interrupt request is in the process of being acknowledged anywhere in the system. If an interrupt request has been latched into the TIMER INTERRUPT flip-flop, or the EXTERNAL INTERRUPT flip-flop, the PSU logic waits until after the process of acknowledging the other interrupt has been completed before setting SERVICE REQUEST. This precaution is necessary to insure that the priority chain is not altered during acknowledgement. Chaos would result if half of the interrupt vector came from one device and the second half from some other device.

The SERVICE REQUEST flip-flop is cleared after an interrupt from the PSU has been acknowledged. It is also cleared whenever the PSU's interrupt control register is accessed by an output instruction.

The conditions for setting the TIMER INTERRUPT flip-flop and the EXTERNAL INTERRUPT flip-flop differ slightly. External interrupts must be enabled before the EXTERNAL INTERRUPT flip-flop can be set by a negative going transition of $\overline{\text{EXT INT}}$. However, TIMER INTERRUPT will be set by a timer TIME OUT independent of Interrupt Control Port bit 1. This means that the PSU can detect a time out interrupt that occurred while the external interrupt was enabled in the PSU.

The TIMER INTERRUPT flip-flop is cleared whenever the PSU's timer is loaded or when its timer interrupt has been acknowledged. The EXTERNAL INTERRUPT flip-flop is cleared whenever the PSU's interrupt control register is accessed by an output instruction, or when its external interrupt has been acknowledged.

INTERRUPT ACKNOWLEDGE SEQUENCE

Upon receiving an interrupt request, whether from an external source via $\overline{\text{EXT INT}}$ or from the internal timer, the PSU and CPU go through an interrupt

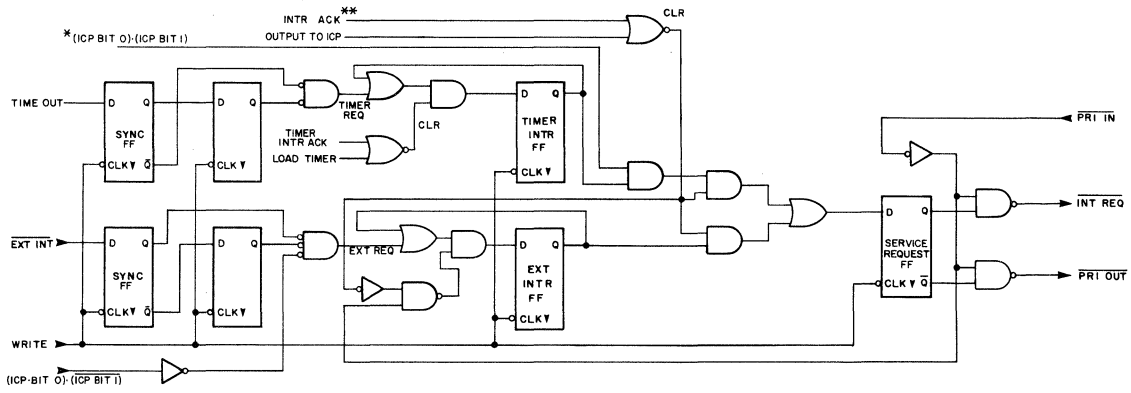

* ICP-Interrupt Control Port
**1 During Event G in Fig 8

Figure 7

sequence which results in the execution of an interrupt service routine located at the memory address pointed to by the Interrupt Address Vector. Figures 8 and 9 illustrate the interrupt sequence for the two cases. Events occuring in these sequences are labeled with the letters A through H. Events are described as follows.

EVENT A

The initial interrupt request arrives. The falling edge of $\overline{\text{EXT INT}}$ pin identifies an external interrupt. The rising edge of interval timer output indicates a time-out.

EVENT B

The synchronizing flip-flop in the PSU control logic changes state.

EVENT C

The timer interrupt, or external interrupt flip-flop goes true, indicating the local interrupt logic's acknowledgement of the interrupt. The timer interrupt flip-flop will always respond and save the time-out occurrence, whereas the external interrupt flip-flop will only be set at this time if the external interrupt mode is enabled within the local control logic.

EVENT D

The $\overline{\text{INT REQ}}$ line is pulled low by the PSU, passing the request for servicing on to the CPU. The conditions that must be present for this to occur are:

The $\overline{\text{PRI IN}}$ pin must be low.

The proper enable state must exist in the local control logic for the type of interrupt (timer or external).

The system is not already into Event F due to servicing some other interrupt.

EVENT E

The CPU now begins its response to the $\overline{\text{INT REQ}}$, line by outputting the unique ROMC state H'10' inhibiting modification of interrupt priority logic. This will only occur when the following conditions are satisfied:

The CPU is executing the last cycle of an instruction (beginning an instruction fetch).

The ICB is enabled (ICB = 0).

The current instruction fetch is not protected (not a privileged instruction).

EVENT F

The CPU generates the interrupt acknowledge sequence of ROMC states as follows:

ROMC STATE	
10	Inhibit modification of interrupt priority logic.
IC	No function
0F	Put lower byte of interrupt address vector on data bus
13	Put upper byte of interrupt address vector on data bus
00	Fetch instruction from memory (first instruction of interrupt service routine)

EVENT G

At this point the CPU begins fetching the first instruction of the interrupt service routine. In the PSU interrupt logic, the SERVICE REQUEST flip-flop and the appropriate INTERRUPT REQUEST flip-flop are cleared.

EVENT H

The CPU begins executing the first instruction of the interrupt service routine.

INTERRUPT ADDRESS VECTOR

During the interrupt acknowledge, the interrupting PSU provides a 16-bit interrupt address vector. The CPU causes this vector to be loaded into P0, so that program execution can branch to the routine that handles this particular interrupt. Fifteen bits of the interrupt vector are specified as a mask option. Bit 7 cannot be masked. It is set by the interrupt control logic to 0 if the timer interrupt is enabled or to a 1 if external interrupt is enabled. The interrupt vector is of the form:

WWWW, XXXX, 0YYY, ZZZZ for timer interrupt and WWWW, XXXX, 1YYY, ZZZZ for external interrupt where W,X Y and Z are the mask specified bits.

INTERRUPT SIGNALS TIMING

Timing for signals associated with the MK 3851 interrupt logic is shown in Figure 12.

TIMER INTERRUPT SEQUENCE

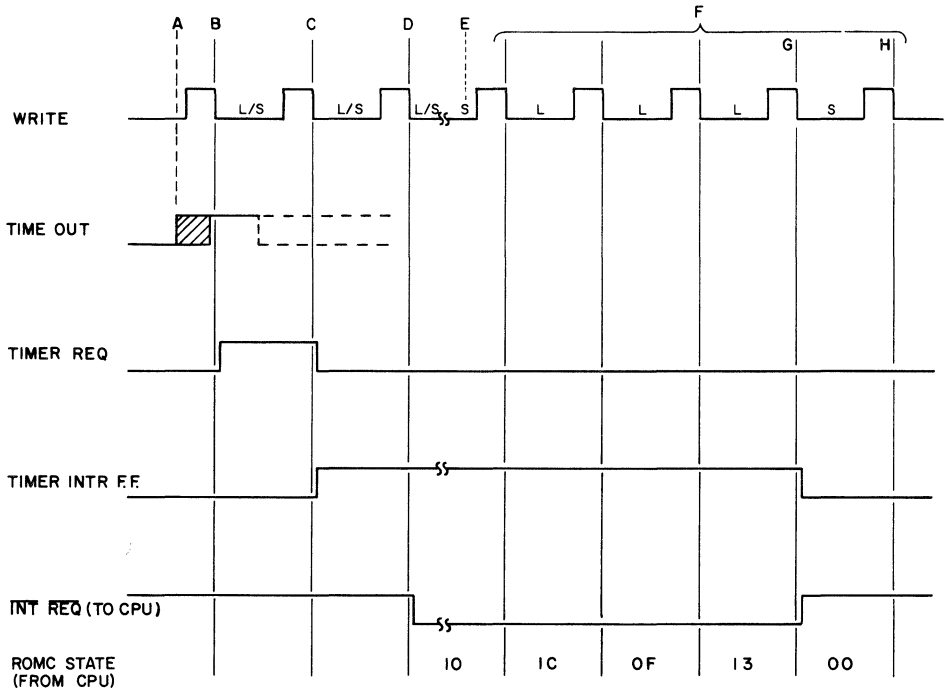

Figure 8

F8 Family

EXTERNAL INTERRUPT SEQUENCE

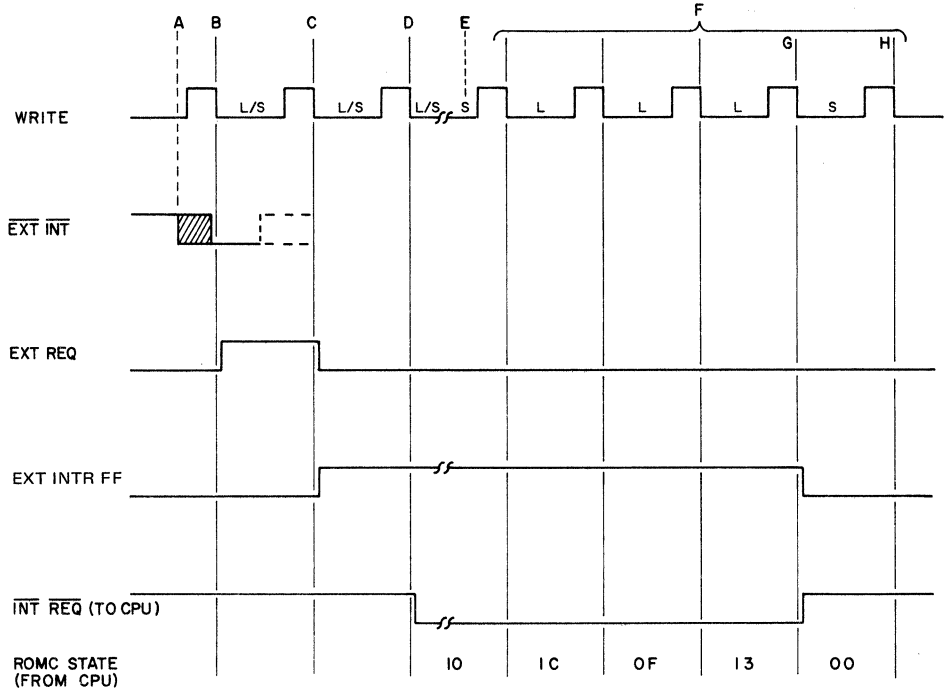

Figure 9

F8 Family

ELECTRICAL SPECIFICATIONS

ABSOLUTE MAXIMUM RATINGS (Above which useful life may be impaired)

V_{GG} ..... +15V to –0.3V
V_{DD} ..... +7V to –0.3V
I/O Port Open Drain Option ..... +15V to –0.3V
External Interrupt Input ..... –1mA to +225 μA
All other inputs & outputs ..... +7V to –0.3V
Storage Temperature ..... –55°C to +150°C
Operating Temperature ..... 0°C to +70°C

Note: All voltages with respect to V_{SS}.

DC CHARACTERISTICS

V_{SS} = 0V, V_{DD} = +5V ±5%; V_{GG} = +12V ± 5%, T_A = 0°C to + 70°C

SUPPLY CURRENTS

SYMBOL	PARAMETER	MIN	TYP	MAX	UNITS	TEST CONDITIONS
I_{DD}	V_{DD} Current		30	70	mA	f = 2MHz, Outputs Unloaded
I_{GG}	V_{GG} Current		10	18	mA	f = 2MHz, Outputs Unloaded

DC SIGNAL CHARACTERISTICS

V_{DD} = +5V ± 5%, V_{GG} = + 12V ± 5%, V_{SS} = 0V T_A = 0-70°C

SIGNAL	SYMBOL	PARAMETER	MIN	MAX	UNITS	TEST CONDITIONS
DATA BUS (DB0-DB7)	V_{IH}	Input High Voltage	3.5	V_{DD}	Volts	
	V_{IL}	Input Low Voltage	V_{SS}	0.8	Volts	
	V_{OH}	Output High Voltage	3.9	V_{DD}	Volts	I_{OH} = −100 μA
	V_{OL}	Output Low Voltage	V_{SS}	0.4	Volts	I_{OL} = 1.6mA
	I_{IH}	Input High Current		1	μA	V_{IN} = V_{DD}, tri-state mode
	I_{OL}	Input Low Current		−1	μA	V_{IN} = V_{SS}, tri-state mode
CLOCK LINES (Φ,WRITE)	V_{IH}	Input High Voltage	3.5	V_{DD}	Volts	
	V_{IL}	Input Low Voltage	V_{SS}	0.8	Volts	
	I_L	Leakage Current		1	μA	V_{IN} = V_{DD}
PRIORITY IN AND CONTROL LINES ($\overline{\text{PRI IN}}$, ROMC0–ROMC4)	V_{IH}	Input High Voltage	3.5	V_{DD}	Volts	
	V_{IL}	Input Low Voltage	V_{SS}	0.8	Volts	
	I_L	Leakage Current		1	μA	V_{IN} = V_{DD}
PRIORITY OUT ($\overline{\text{PRI OUT}}$)	V_{OH}	Output High Voltage	3.9	V_{DD}	Volts	I_{OH} = −100 μA
	V_{OL}	Output Low Voltage	V_{SS}	0.4	Volts	I_{OL} = 100 μA
INTERRUPT REQUEST ($\overline{\text{INT REQ}}$)	V_{OH}	Output High Voltage			Volts	Open Drain Output [1]
	V_{OL}	Output Low Voltage	V_{SS}	0.4	Volts	I_{OL} = 1mA
	I_L	Leakage Current		1	μA	V_{IN} = V_{DD}
DATA BUS DRIVE ($\overline{\text{DBDR}}$)	V_{OH}	Output High Voltage				Open Drain Output
	V_{OL}	Output Low Voltage	V_{SS}	0.4	Volts	I_{OL} = 1.6mA
	I_L	Leakage Current		1	μA	V_{IN} = V_{DD}
EXTERNAL INTERRUPT ($\overline{\text{EXT INT}}$)	V_{IH}	Input High Voltage	3.5	15	Volts	
	V_{IL}	Input Low Voltage	−V_{SS}	1.2	Volts	
	V_{IC}	Input Clamp Voltage		15	Volts	I_{IH} = 185 μA
	I_{IH}	Input High Current		10	μA	V_{IN} = V_{DD}
	I_{IL}	Input Low Current	−250	−750	μA	V_{IN} = V_{SS}
I/O PORT OPTION A	V_{OH}	Output High Voltage	3.9	V_{DD}	Volts	I_{OH} = −30 μA
(STANDARD PULL-UP)	V_{OH}	Output High Voltage	2.9	V_{DD}	Volts	I_{OH} = −100 μA
	V_{OL}	Output Low Voltage	V_{SS}	0.4	Volts	I_{OL} = 1.6mA
	V_{IH}	Input High Voltage	2.9	V_{DD}	Volts	Internal Pull-up to V_{DD} [3]
	V_{IL}	Input Low Voltage	V_{SS}	0.8	Volts	
	I_L	Input Low Current		−1.6	mA	V_{IN} = 0.4V [4]
I/O PORT OPTION B	V_{OH}	Output High Voltage				Open Drain Output
(OPEN DRAIN)	V_{OL}	Output Low Voltage	V_{SS}	0.4	Volts	I_{OL} = 1.6mA
	V_{IH}	Input High Voltage	2.9	V_{DD}	Volts	[3]
	V_{IL}	Input Low Voltage	V_{SS}	0.8	Volts	
	I_{IL}	Leakage Current		2	μA	V_{IN} = V_{DD}
I/O PORT OPTION (DRIVER PULL–UP)	V_{OH}	Output High Voltage	3.9	V_{DD}	Volts	I_{OH} = −850 μA
	V_{OL}	Output Low Voltage	V_{SS}	0.4	Volts	I_{OL} = 1.6mA

Notes:

1. Pull-up resistor to V_{DD} on CPU.
2. Positive current is defined as conventional current flowing into the pin referenced.
3. Hysteresis input circuit typically provides additional 0.3V noise immunity while internal/external pull-up provides TTL compatibility.
4. Measured while I/O port is outputting a high level.

AC CHARACTERISTICS

V_{SS} = 0V, V_{DD} = +5V ± 5%, V_{GG} = +12V ± 5%, T_A = 0°C to + 70°C

Symbols in this table are used by all timing diagrams.

Symbol	Parameters	Min	Typ	Max.	Units	Test Conditions/ Comments
P Φ	ΦPeriod	0.5		10	μs	
PW_1	ΦPulse Width	180		P Φ–180	ns	t_r, t_f = 50 ns typ
td_1	Φto WRITE + Delay	0		250	ns	C_L = 100pF
td_2	Φto WRITE – Delay	0		225	ns	C_L = 100pF
td_4	WRITE to DB Input Delay			2PΦ+1.0	μs	
PW_2	WRITE Pulse Width	P Φ–100		P Φ	ns	t_r,t_f = 50 ns typ.
PW_S	WRITE Period; Short		4P Φ			
PW_L	WRITE Period; Long		6P Φ			
td_3	WRITE to ROMC Delay			500	ns	
td_6	WRITE to DB Output Delay	2PΦ+100–td_2	2PΦ+200	2PΦ+800–td_2	ns	C_L = 100pF
td_7	WRITE to $\overline{DBDR}$ –Delay	2PΦ+100–td_2	2PΦ+200	2PΦ+800–td_2	ns	C_L = 100pF
td_8	WRITE to $\overline{DBDR}$ + Delay		200		ns	Open Drain
tr_1	WRITE to $\overline{INT\ REQ}$ – Delay			430	ns	C_L = 100 pF [1]
tr_2	WRITE to $\overline{INT\ REQ}$ + Delay			430	ns	C_L = 100pF [3]
tpr_1	PRI IN to $\overline{INT\ REQ}$ – Delay			240	ns	C_L = 100pF [2]
tpr_2	PRI IN to $\overline{INT\ REQ}$ + Delay			430	ns	C_L = 100pF
tpd_1	PRI IN to $\overline{PRI\ OUT}$ –Delay			300	ns	C_L = 50pF
tpd_2	PRI IN to $\overline{PRI\ OUT}$ + Delay			365	ns	C_L = 50pF
tpd_3	WRITE to $\overline{PRI\ OUT}$ + Delay			700	ns	C_L = 50pF
tpd_4	WRITE to $\overline{PRI\ OUT}$ – Delay			640	ns	C_L = 50pF
t_{sp}	WRITE to Output Stable			1.7	μs	C_L = 50pF, Standard Pull-up
t_{od}	WRITE to Output Stable			1.7	μs	C_L = 50pF R_L = 12.5K Ω Open Drain
t_{dp}	WRITE to Output Stable		200	400	ns	C_L = 50pF, Driver Pull-up
t_{su}	I/O Setup Time	1.3			μs	
t_h	I/O Hold Time	0			μs	
t_{ex}	$\overline{EXT\ INT}$ Setup Time	400			ns	

Table 4

Notes:

1. Assume Priority In was enabled ($\overline{PRI\ IN}$ = 0) in previous F8 cycle before interrupt is detected in the PSU.
2. PSU has interrupt pending before priority in is enabled.
3. Assume pin tied to $\overline{INT\ REQ}$ input of the 3850 CPU.
4. The parameters which are shaded in the table above represent those which are most frequently of importance when interfacing to an F8 system. Unshaded parameters are typically those that are relevant only between F8 chips and not normally of concern to the user.
5. Input and output capacitance is 3 to 5pF typical on all pins except V_{DD}, V_{GG}, and V_{SS}.

PSU DATA BUS TIMING

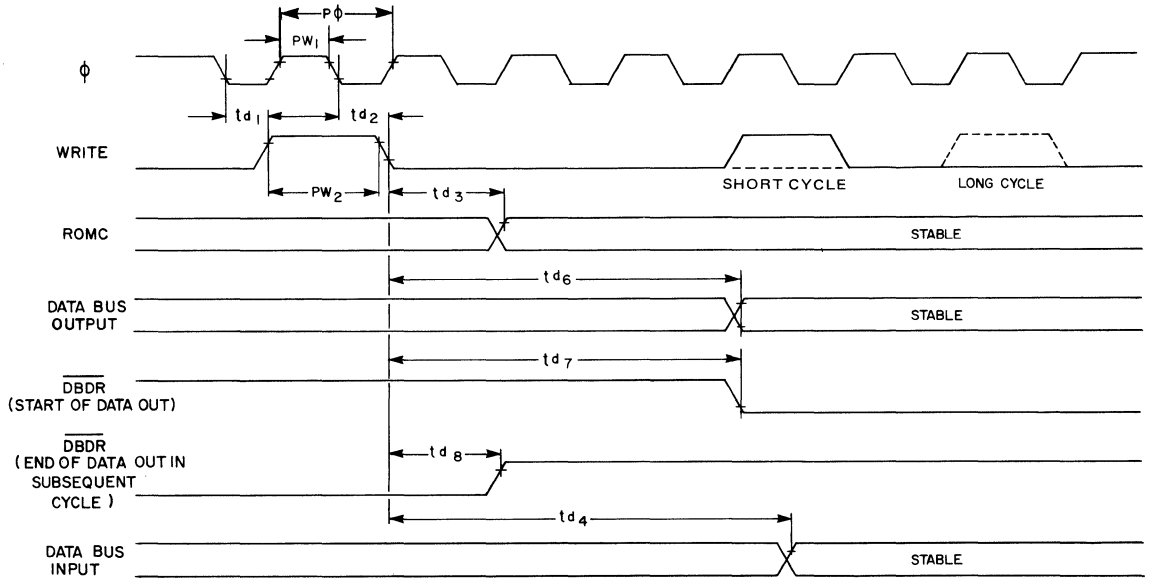

Figure 10

TIMING AT PSU I/O PORTS

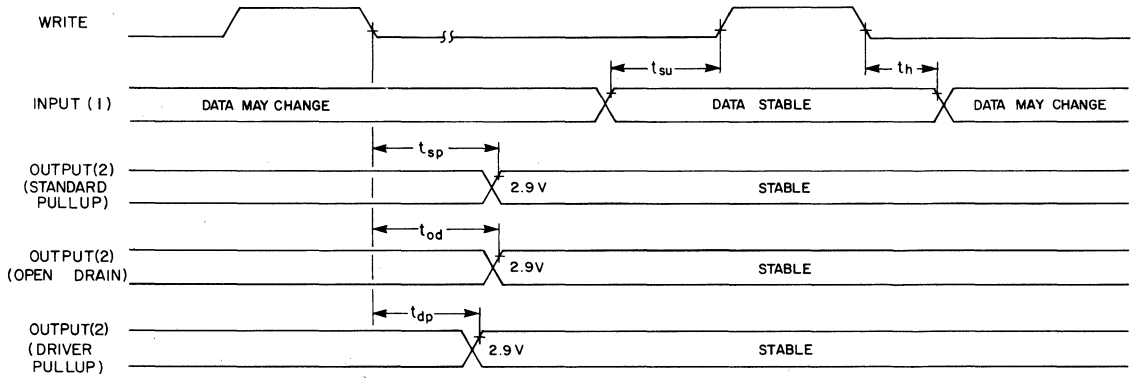

1. The set-up and hold times specified are with respect to the end of the second long cycle during execution of the three cycle IN or INS instruction.
2. All delay times are specified with respect to the end of the second long-cycle during execution of the three cycle OUT or OUTS instruction.

Figure 11

INTERRUPT LOGIC SIGNALS TIMING

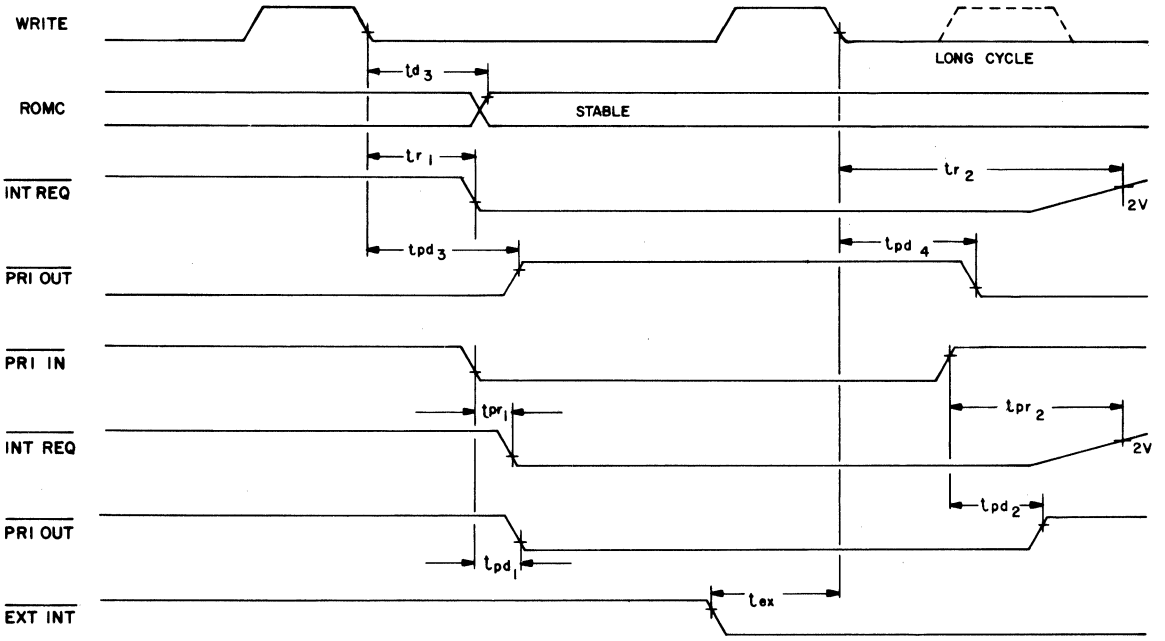

NOTE: Timing measurements are made at valid logic level of the signals referenced unless otherwise noted.

Figure 12

F8 Family

ORDER INFORMATION

PACKAGE SPECIFICATION

MK 3851N/12XXX	Plastic
MK 3851P/12XXX	Ceramic

The 12XXX number is assigned by MOSTEK when an MK 3851 is ordered. All mask options must also be specified as described in the next section.

OPTION SPECIFICATION

CARD FORMAT USED TO DEFINE MK 3851 PSU MASK OPTIONS

Mask options are specified using a card file which may include the following types of card:

- Option card,
- Comment cards,
- 'X' cards (text format commands), and
- 'C' cards (ROM truth table data).

OPTION CARD FORMAT

The option card must always be the first card in the input data file. The format of the option card follows:

Column	1-20	26-30	35-36	40-42	45	50-53	58-60	63-65
	User	SL	ROM	IO	Port	Timer	HEX DEC	HEX DEC

User is the customer name

SL is a 5-digit SL number for the device assigned by MOSTEK (Leave Blank)

ROM is the ROM number (0-63 decimal) Specifies ROM page

IO is the decimal number (n) of the lowest of the four I/O port addresses selected where: $n = 4a, 1 \leqslant a \leqslant 63$

Port is 1 for Standard I/O
2 for Open Drain
3 for Driver Pull-up (Output Only)

Timer is the Timer/External Interrupt Address Vector (4 Hexadecimal digits)

Columns 58-60 specify the desired number base for the address field on the output listing.

Columns 63-65 specify the desired number base for the data fields on the output listing. Each defaults to DECIMAL when not specified. All other fields on the option card must be specified.

COMMENT CARD FORMAT

Each comment card must have an asterisk (*) in column 1. All other columns are ignored. A comment card may occur any time after the option card in the input file. Comment cards are optional.

TEXT FORMAT CARD FORMAT

The text format commands are used to describe the format of the ROM data cards which follow. Text format commands should have the character 'X' in column 1 and should precede all ROM data cards. The valid text format commands are:

X SEQUENCE
indicates that the ROM has sequence numbers in columns 77-79. This command causes F8 ROM to do sequence checking.

X BASE HEX HEX
DEC DEC
specifies the number base of the ROM address input and the ROM data input respectively. If no X BASE card occurs, all fields are assumed to be decimal.

DATA CARD FORMAT

The data cards for F8 PSUs must have the character 'C' in column 1. The ROM truth table data card format is as follows:

Column	1	2-9	10-12	14-16	17-19	20-22	77-79
	C	Add	Bytes	Data 1	Data 2	Data 3. .	Data 22

Add is the ROM address of the first data field on the card
Bytes is the number of bytes of data on the card (< 23) Same number base as address.
Data n specifies the data to be coded at ROM address (Add + n − 1) for 0 < n < = Bytes
Data 22 is a sequence number if an X SEQUENCE card has occurred

NOTE: All numeric fields must be right justified.

OTHER INPUT METHODS

For information concerning other methods of input contact a MOSTEK representative.

PACKAGE DESCRIPTION

40-Pin Dual In-Line Ceramic

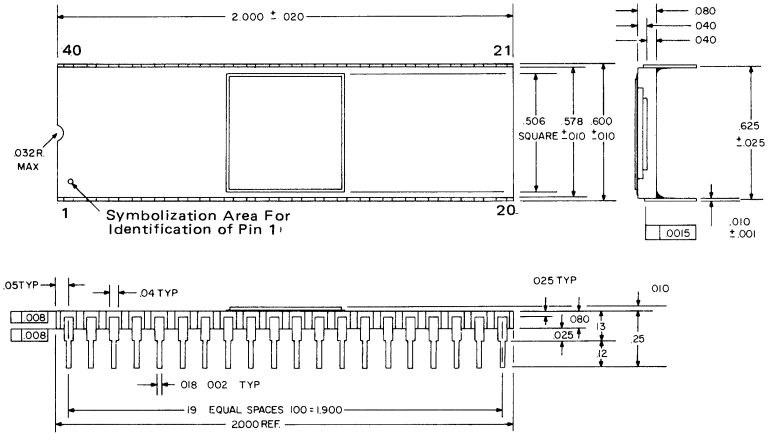

40-Pin Dual In-Line Plastic

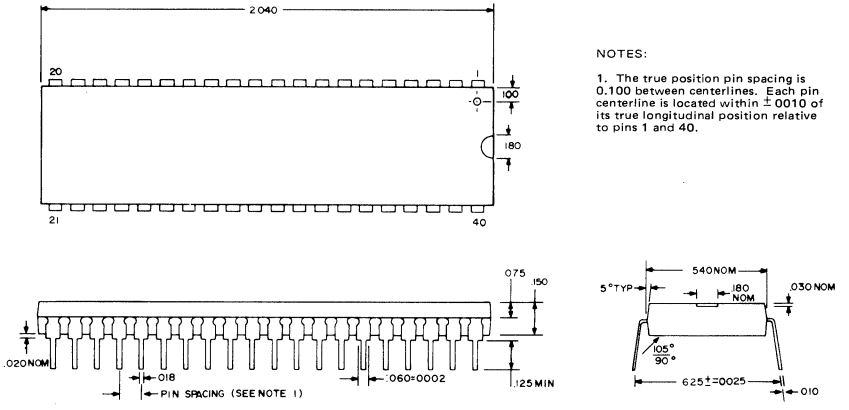

NOTES:

1. The true position pin spacing is 0.100 between centerlines. Each pin centerline is located within ±.0010 of its true longitudinal position relative to pins 1 and 40.

F8 Family