MOSTEK®

F8 MICROCOMPUTER DEVICES

Static Memory Interface MK 3853

FEATURES

- ☐ Static Memory Interface to RAM,ROM or PROM
- ☐ Programmable Timer
- ☐ Programmable Interrupt Vectors for Timer and External Interrupts
- ☐ Low Power Dissipation Typically Less Than 335 mw

GENERAL DESCRIPTION

The MK 3853 Static Memory Interface (SMI) provides all necessary address lines and control signals to interface up to 65,536 bytes of Static RAM, ROM or PROM to an F8 microcomputer system. When quantities do not justify the mask charges for the MK 3851 PSU, or a fast turn around is of high importance, the MK 3853 SMI can be used to interface the F8 to EPROM or fusible-link bipolar PROMs. The 3853 SMI along with standard PROM can emulate the memory function of the 3851 PSU, while the 3861 provides the I/O ports, interrupt and timer features of the 3851 PSU. The 3853 is a high performance MOS/LSI circuit using N-channel Isoplanar technology.

FUNCTIONAL PIN DESCRIPTION

ADDR0-ADDR15 – The address bus provides the location of a memory read or write cycle.

DB0-DB7 – The Data Bus provides bi-directional communication between the 3850 F8 CPU and the 3853 SMI and all other F8 peripheral devices.

ROMC0-ROMC4 – These lines provide the 3853 SMI with control information from the 3850 F8 CPU.

PIN NAME	DESCRIPTION	TYPE
DB0-DB7	Data Bus Lines	Bi-directional, tri-state
ADDR0-ADDR15	Address Lines	Output
Φ,WRITE	Clock Lines	Input
$\overline{\text{INT REQ}}$	Interrupt Request	Output
$\overline{\text{PRI IN}}$	Priority In Line	Input
$\overline{\text{RAM WRITE}}$	Write Line	Output
$\overline{\text{EXT INT}}$	External Interrupt Line	Input
REGDR	Register Drive Line	Input/Output
CPU READ	CPU Read Line	Output
ROMC0-ROMC4	Control Lines	Input
V_{GG}, V_{DD}, V_{SS}	Power Supply Lines	Input

SINGLE CHIP MICROCOMPUTER

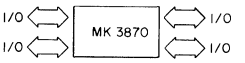

F8 FAMILY

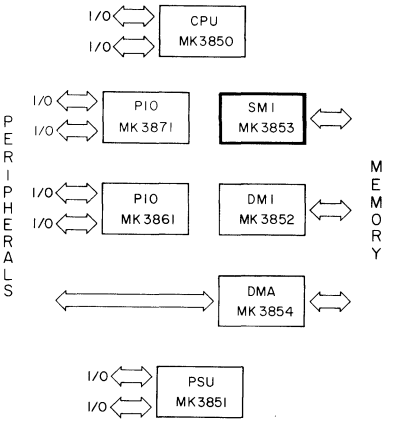

PIN CONNECTIONS

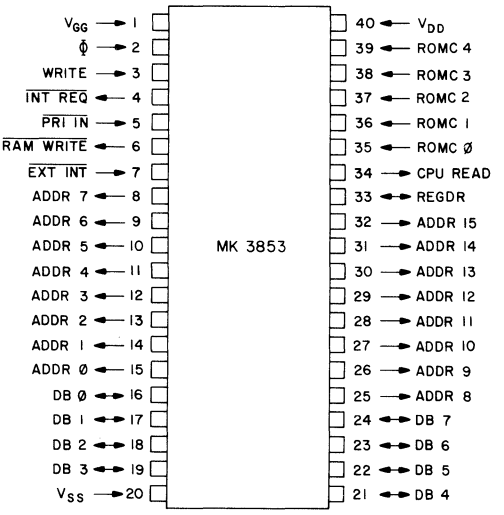

F8 Family

BLOCK DIAGRAM

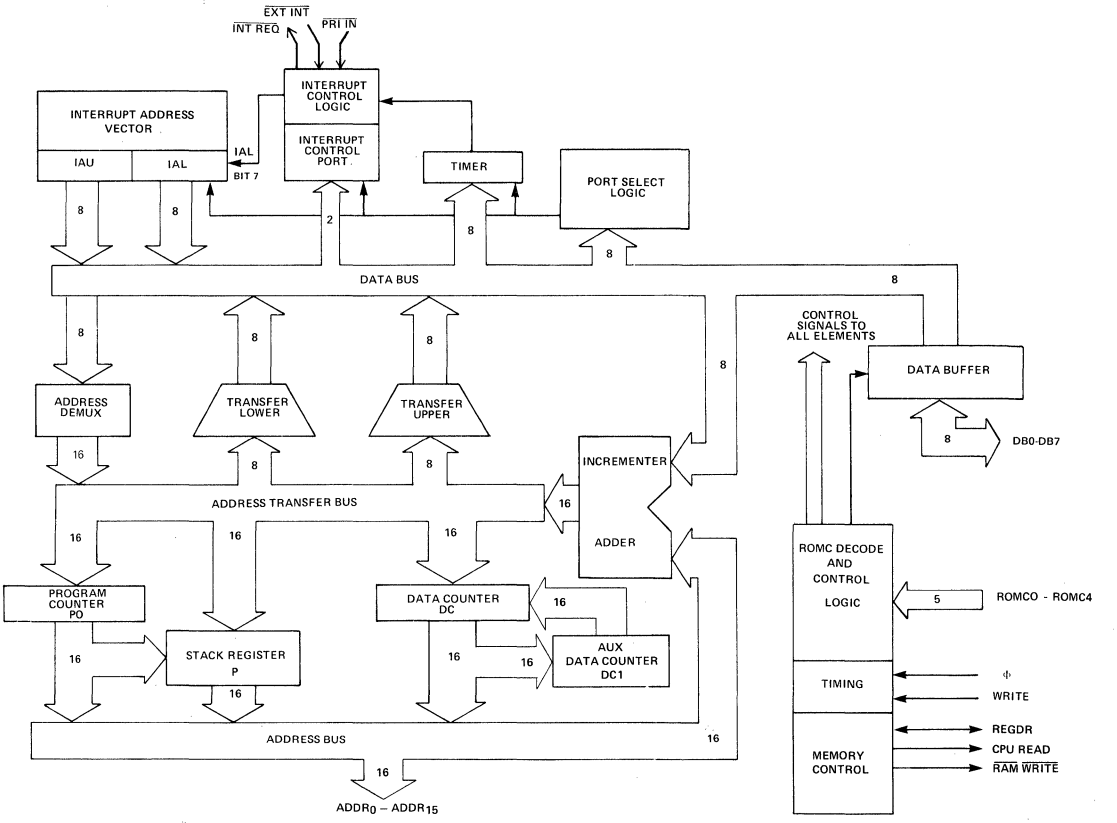

Figure 1

Φ– This is the system clock generated by the 3850 F8 CPU.

WRITE – This clock defines the machine cycle.

EXT INT – When an external circuit pulls this input "low", an external interrupt will be latched into the SMI if its interrupt control register has been set up to allow external interrupts. The SMI will then communicate this interrupt request to the CPU via INT REQ line.

PRI IN – This input signals the SMI that a higher priority peripheral has an interrupt request pending on the CPU. If the SMI has already requested an interrupt, the interrupt request will be maintained, but will not be serviced by the CPU until PRI IN is in the "low" state.

INT REQ – This is an open drain output that is wire ORed with the corresponding INT REQ outputs of all other peripherals to form the interrupt request input to the CPU.

RAM WRITE – This signal, when low, specifies that data from the data bus is to be written into a RAM location specified by the address bus.

CPU READ – This signal when high, specifies that data is to be read from the memory array interfaced to the SMI.

REGDR (OUTPUT/INPUT) – This signal functions both as an input and an output, to gate P0, DC, and I/O ports '0C' and '0D' onto the data bus at the proper time.

DEVICE ORGANIZATION

This section describes the basic functional elements of the MK 3853 SMI. These elements are shown in the SMI functional block diagram (figure 1).

PROGRAM COUNTER (PO) AND DATA COUNTERS (DC AND DC1)

The MK 3853 SMI addressing logic consists of 3 16-bit registers , the Program Counter (PO) and the Data Counters (DC and DC1)

The Program Counter will at all times address the memory word from which the next object program code must be fetched. The Data Counter (DC) addresses memory words containing individual data bytes or bytes within data tables to be used as operands.

It is important to note that the 3853 SMI has an auxiliary Data Counter (DC1). The contents of DC can be saved in DC1 by using the instruction XDC (exchange data counters). This instruction puts the contents of DC into DC1 and the contents of DC1 into DC. DC⇄DC1.

PO will always address the memory location out of which the next object program instruction byte will be read. If the instruction requires data (an operand) other than an immediate operand to be accessed, DC must address memory. PO cannot be used to address a NON-immediate operand since PO is saving the address of the next instruction code.

THE STACK REGISTER P

The MK 3853 SMI addressing logic contains a fourth 16-bit register called the stack register (P). The stack register is a buffer for the program counter PO. The contents of the stack register are never used directly to address memory.

The following instructions access P

LR K, P	Move the contents of P to the CPU scratchpad K registers
LR P,K	Move the contents of the CPU K scratchpad registers to P
PK	Save the contents of PO in P then move the contents of CPU scratchpad registers 12 and 13 to PO
PI H'aaaa'	Move the contents of PO to P then load the hexadecimal value into PO
POP	Move the contents of P to PO

In addition, when an interrupt is acknowledged, the contents of PO are saved in P.

MEMORY CONTROLS

The 3853 SMI provides three memory control outputs: $\overline{\text{RAM WRITE}}$, CPU READ and REGDR.

$\overline{\text{RAM WRITE}}$ is used to control the read/write cycle of a static memory. $\overline{\text{RAM WRITE}}$ should be tied directly to the R/$\overline{\text{W}}$ line of the static memory.

CPU READ is a control signal that signifies that data is to be read out of a memory location. CPU READ and an externally generated address page select signal can be gated together to form a signal to enable the output of the memory array onto the F8 data bus.

REGDR is both an input and an output that is used to gate the program counter PO, data counter (DC), and I/O ports ('0C'H and '0D'H) onto the data bus at the proper time. If the 3851 PSU or 3852 DMI are not used in the system, then REGDR may be left open. If one or more 3851 PSU's are used in a system without the 3852 DMI, then the signal DBDR from all PSU's in the system should be tied together and gated through an open collector AND gate and tied to REGDR of the SMI. If the 3852 DMI and the 3853 SMI are used in a system without the 3851 PSU, then REGDR of the SMI should be left open and REGDR of the 3852 DMI should be tied low to prevent a data bus conflict when the PO and DC registers are output onto the data bus.

INCREMENTER ADDER LOGIC

There are only two arithmetic operations that memory devices need to perform on the contents of memory address registers:

1. Increment by 1 the 16-bit value stored in an address register.
2. Add an 8-bit value, treated as a signed binary number (subject to twos complemented arithmetic) to the 16-bit value stored in address register.

The incrementer adder logic performs these two functions in the MK 3853 SMI.

INTERRUPT LOGIC

This logic responds to an interrupt request signal which may originate internally from timer logic, or be input by an external device. Based on priority considerations, the interrupt request is passed on to the MK 3850 CPU.

TIMER LOGIC

Every MK 3853 SMI has a polynomial shift register which may be used in conjunction with interrupt logic to generate real-time intervals.

Upon counting down to zero, the timer uses interrupt logic to signal that it has timed out.

The timer is programmable and is handled as though it were an I/O port. Using an OUT or OUTS instruction, a value may be loaded into the timer in order to determine the real-time period at the end of which a time-out interrupt will be generated.

THE DATA BUS

The 8-bit data bus is the main path for transfer of information between the MK 3850 CPU and other devices in the F8 microprocessor system.

ADDRESSABLE I/O PORTS

Every MK 3853 SMI has four, 8-bit I/O ports. Two of the I/O ports are used to store a programmable interrupt vector address. A third I/O port is assigned to a programmable timer while a fourth port is the Interrupt Control Port.

ROMC STATES ROMC (Hexadecimal)	OPERATION PERFORMED	COMMENT
00	DB ← ((P0)) ; P0←P0 +1	OP CODE, FETCH
01	DB ← ((P0)) ; P0←P0 +DB	BRANCH OFFSET FETCH
02	DB ←((DC)); DC←DC+1	
03	DB ←((P0)) ; P0←P0+1	IMMEDIATE OPERAND FETCH
04	P0 ←P	
05	((DC))←DB ; DC←DC+1	
06	DB←DCU	
07	DB←PU	
08	P←P0 ; DB←H'00'; P0L, P0H← DB	EXTERNAL RESET
09	DB ←DCL	
0A	DC←DC+DB	
0B	DB←PL	
0C	DB←((P0)) ; DCL←DB	
0D	P←P0+1	
0E	DB←((P0)) ; DCL←DB	
0F	P←P0 ; DB←IAL ; P0L← DB	LOWER BYTE OF ADDRESS VECTOR
10	FREEZE INTERRUPT STATUS	PREVENT ADDRESS VECTOR CONFLICTS
11	DB←((P0)) ; DCU←DB	
12	P0L←DB ; P←P0	
13	DB←IAU; P0U←DB	UPPER BYTE OF ADDRESS VECTOR
14	P0U←DB	
15	PU←DB	
16	DCU←DB	
17	P0L ←DB	
18	PL←DB	
19	DCL←DB	
1A	((pp))←DB or ((p))←DB	
1B	DB←(pp)) or DB←((p))	
1C	NO OPERATION	
1D	DC ⇄ DC1	
1E	DB←P0L	
1F	DB←P0U	

Definitions

DB - Data Bus		IA - Interrupt address vector	
P0 - Program Counter		L - Lower byte suffix	
DC - Data Counter		U - Upper byte suffix	
DC1 - Aux Data Counter		( ) - Contents of	
P - Stack Register		← - transfer to	
pp - Two hex digits (long I/O port address)		⇄ - exchange	
p - One hex digit (short I/O port address)			

Table 1

The four I/O ports of the MK 3853 SMI have the following port addresses:

H'OC'	Programmable Interrupt Vector (upper byte)
H'OD'	Programmable Interrupt Vector (lower byte)
H'OE'	Interrupt Control Port
H'OF'	Programmable Timer

OPERATIONAL DESCRIPTION

CLOCK TIMING

All timing within the MK 3853 SMI is controlled by Φ and WRITE, which are input from the MK 3850 CPU. Each machine cycle will contain either 4 Φ clock periods (short cycle) or 6 Φ clock periods (long cycle).

The WRITE clock refreshes and updates the MK3853 SMI. A machine cycle begins with the fall of the WRITE clock and the system control lines become stable shortly after the start of the cycle.

INSTRUCTION EXECUTION

The MK 3853 SMI responds to signals which are output by the MK 3850 CPU in the course of executing instruction cycles.

Table 1 summarizes the response of the MK 3853 SMI to the ROMC states.

MEMORY ADDRESSING

Those ROMC states which specify a memory access call for only one memory device to respond to the memory access operation. However, every memory device responds to ROMC states that call for modification of program counter or data counter register contents. Consider two examples:

1. ROMC state 5 specifies that the data counter DC register contents must be incremented. Every memory device will simultaneously receive this ROMC state, and will simultaneously increment the contents of its DC register.

2. ROMC state 0 is the standard instruction fetch. Only the memory device whose address space includes the current contents of the program counter P0 registers will respond to this ROMC state by accessing memory and placing the contents of the addressed memory word on the 8-bit data bus. However, every memory device will increment the contents of its P0 register, whether or not the P0 register contents are within the memory space of the device.

When all memory devices are connected to the 8-bit data bus of a MK 3850 CPU and are also connected to the ROMC control lines of the same CPU, the memory devices simultaneously receive the same ROMC state signals from the CPU and respond to ROMC states by identically modifying the contents of memory address registers. Therefore the P0 register on all memory devices contains identical information. The same holds true for DC and P registers.

Only the memory device whose address space includes the specified memory address, will respond to any memory access request. To avoid addressing conflicts, it is necessary to insure that the following three conditions exist:

1. Memory devices must receive the ROMC state signals from one CPU.

2. Memory array decoding must not overlap. (More than one memory device cannot have the same memory space).

3. The memory address contained in the specified register (P0 or DC) must be within the memory space of memory device.

TIMER LOGIC DIAGRAM

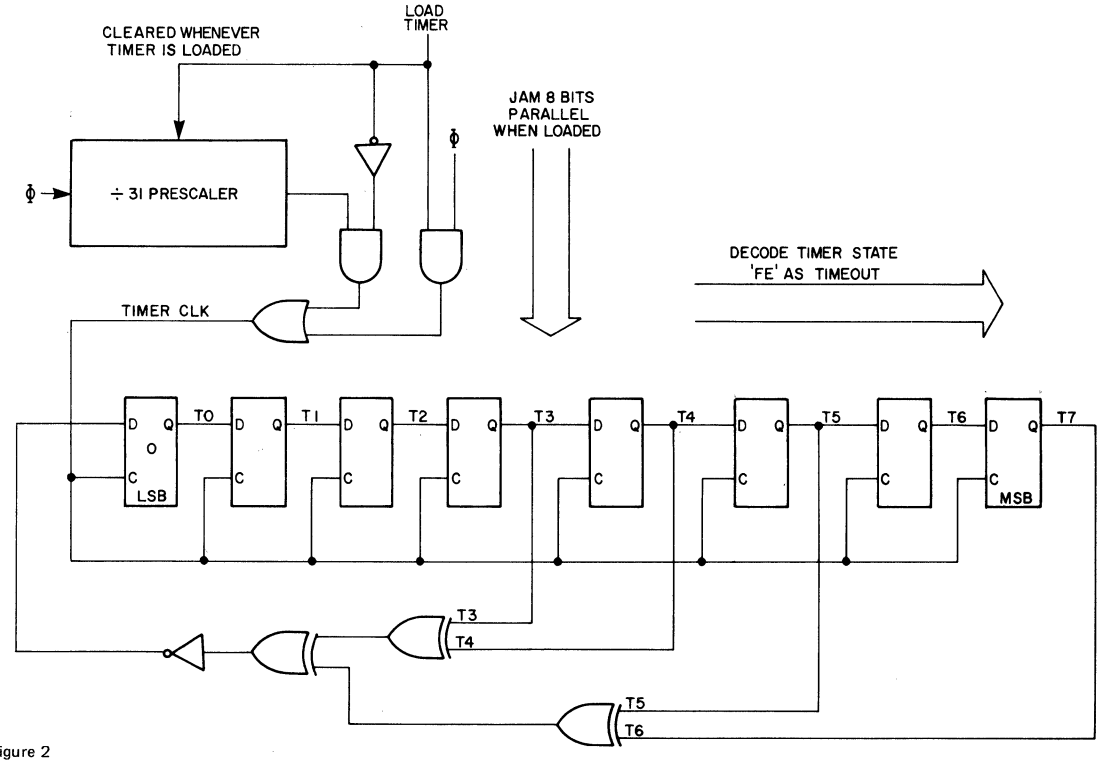

Figure 2

DATA INPUT TO THE SMI

The worst case timing for the MK 3853 SMI receiving data from the data bus is when the data must be added to a 16-bit number within the SMI's Incrementer Adder. This worst case corresponds to data coming from the accumulator in the CPU for an ADC instruction or from a memory device for a BR instruction. For this worst case, arriving data must allow sufficient time for 16-bit Adder logic.

THE PROGRAMMABLE TIMER

The MK 3853 SMI has an 8-bit shift register, addressable as an I/O port, of which may be used as a programmable timer. Figure 2 illustrates the shift register logic and the exclusive OR feedback path.

Based on the logic illustrated in Figure 2, binary values in the range 0 through 254, when loaded into the timer, are converted into "timer counts", as shown in Table 2. Table 2 contains the actual (HEX) value loaded into the timer, and the column/row is the corresponding decimal number of time intervals the timer will take to time out. Data cannot be read out of the programmable timer I/O port.

Either the OUT or OUTS instruction is used to load "timer counts" into the programmable timer. The contents of the programmable timer cannot be read using an IN or INS instruction. The timer will time out after a time interval given by the product:

(period of clock Φ) X (timer counts) X 31

For example, a value of H'C8' loaded into the programmable timer becomes 215 timer counts. The timer will therefore time out in 3.33 milliseconds, if the period of clock signal Φ is 500 nanoseconds.

A value of H'FF' loaded into the programmable timer will stop the timer. This is because the timer shift register feedback gates will always present a logic 1 to the D input of the LSB flip-flop (Fig. 2). Therefore, the timer will retain a value to H'FF' and a H'FE' will never be decoded to cause a time out.

The timer runs continuously unless it has been stopped by loading H'FF' into it. Upon timing out, the timer transmits an interrupt request to the interrupt logic. If proper interrupt logic conditions exist, the timer interrupt request is passed on to the CPU via INT REQ.

After the programmable timer has timed out it will again time out after 255 time counts. Therefore, if the programmable timer is simply left running, it will time out every 7905 Φ clock periods or every 3.9525 milliseconds for a 500 nanosecond clock.

Whenever the timer and timer interrupt are being set to time a new arrival, the timer should be loaded before enabling the timer interrupt. The act of loading the timer clears any pending timer interrupts. When the timer interrupt is enabled, any pending timer interrupt will be acknowledged and forwarded to the CPU. Since the timer runs continuously (unless stopped under program control) enabling the timer before loading a time count can cause a spurious interrupt. Time outs of the timer are latched in the interrupt logic of the SMI, even while timer interrupts are disabled. When the timer is enabled, an immediate interrupt acknowledge will occur if the continuous running timer timed out while timer interrupts were disabled.

If the timer is loaded just prior to enabling timer interrupts a spurious interrupt request will not exist when the timer interrupt is enabled.

Figure 3 illustrates a possible sequence for a timer which is initially loaded with H'C8' then allowed to run continuously.

CONVERSION OF TIMER COUNTS INTO TIMER CONTENTS

	0	1	2	3	4	5	6	7	8	9
0	7F	BF	5F	2F	97	CB	E5	72	39	1C
1	0E	87	43	A1	D0	E8	F4	7A	3D	1E
2	0F	07	03	01	00	80	C0	60	B0	D8
3	EC	F6	7B	BD	5E	AF	D7	6B	35	1A
4	0D	06	83	41	A0	50	A8	54	AA	55
5	2A	15	8A	C5	E2	F1	F8	7C	3E	9F
6	CF	E7	73	B9	5C	AE	57	2B	95	CA
7	65	32	99	CC	66	B3	59	2C	16	0B
8	05	02	81	40	20	10	08	84	C2	61
9	30	98	4C	26	13	89	44	22	11	88
10	C4	62	B1	58	AC	56	AB	D5	6A	B5
11	5A	AD	D6	EB	75	BA	DD	6E	B7	5B
12	2D	96	4B	A5	D2	E9	74	3A	9D	CE
13	67	33	19	8C	C6	63	31	18	0C	86
14	C3	E1	70	38	9C	4E	27	93	C9	E4
15	F2	79	BC	DE	EF	77	BB	5D	2E	17
16	8B	45	A2	51	28	14	0A	85	42	21
17	90	48	24	12	09	04	82	C1	E0	F0
18	78	3C	9E	4F	A7	D3	69	34	9A	4D
19	A6	53	29	94	4A	25	92	49	A4	52
20	A9	D4	EA	F5	FA	7D	BE	DF	6F	37
21	1B	8D	46	23	91	C8	64	B2	D9	6C
22	B6	DB	6D	36	9B	CD	E6	F3	F9	FC
23	7E	3F	1F	8F	47	A3	D1	68	B4	DA
24	ED	76	3B	1D	8E	C7	E3	71	B8	DC
25	EE	F7	FB	FD	FE	FF halts timer				

Each timer count = 15.5 μs at 2MHz

Table 2

INTERRUPT LOGIC ORGANIZATION

The interrupt Control Port has the I/O port address 'OE'H. Data is loaded into this register (I/O port) using an OUT or OUTS instruction. Data cannot be read from this port. The contents of the Interrupt Control Port are interpreted as follows:

CONTENTS OF INTERRUPT CONTROL PORT	FUNCTION
B'xxxxxx00'	Disable all interrupts
B'xxxxxx01'	Enable external interrupt, disable timer interrupt
B'xxxxxx10'	Disable all interrupts
B'xxxxxx11'	Disable external interrupt Enable timer interrupt

TIME OUT AND INTERRUPT REQUEST

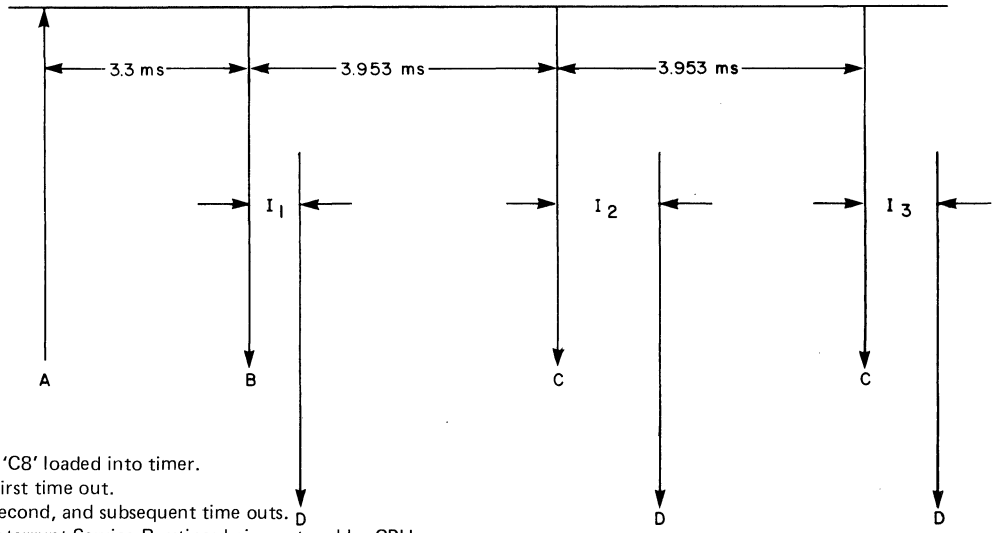

A – H'C8' loaded into timer.
B – First time out.
C – Second, and subsequent time outs.
D – Interrupt Service Routines being entered by CPU.
I_1, I_2, I_3 – Intervals between time out interrupt request reaching interrupt logic and service routines being entered by CPU. These time intervals depend on the number of privileged instructions encountered from the time $\overline{\text{INT REQ}}$ goes low. If none are encountered, 34P Φ is the minimum interval (17 μs for P Φ = 500ns)

Figure 3

In the preceding I/O port contents definitions x represents "don't care" bits.

Depending on the contents of the Interrupt Control Port, a MK 3853 SMI's interrupt control logic can be accepting timer interrupts, or external interrupts, or neither, but never both.

Figure 4 is a conceptual logic diagram of the SMI's interrupt logic. Between the $\overline{\text{EXT INT}}$ input or the time-out input and the output $\overline{\text{INT REQ}}$, there are 4 flip-flops. $\overline{\text{EXT INT}}$ and the time-out interrupt input each have 2 synchronizing flip-flops to detect the active edge.

Each edge detect circuit is followed by its own INTERRUPT flip-flop which latches the true condition.

The outputs of the TIMER INTERRUPT flip-flop and the EXTERNAL INTERRUPT flip-flop are ORed to set the SERVICE REQUEST flip-flop, provided that an interrupt from some other device is not being acknowledged by the CPU.

$\overline{\text{INT REQ}}$ is an open drain signal that is the NAND of PRI IN and SERVICE REQUEST. The $\overline{\text{INT REQ}}$ signal of several devices may be tied together so that any one can force the line to OV if it is requesting

INTERRUPT LOGIC

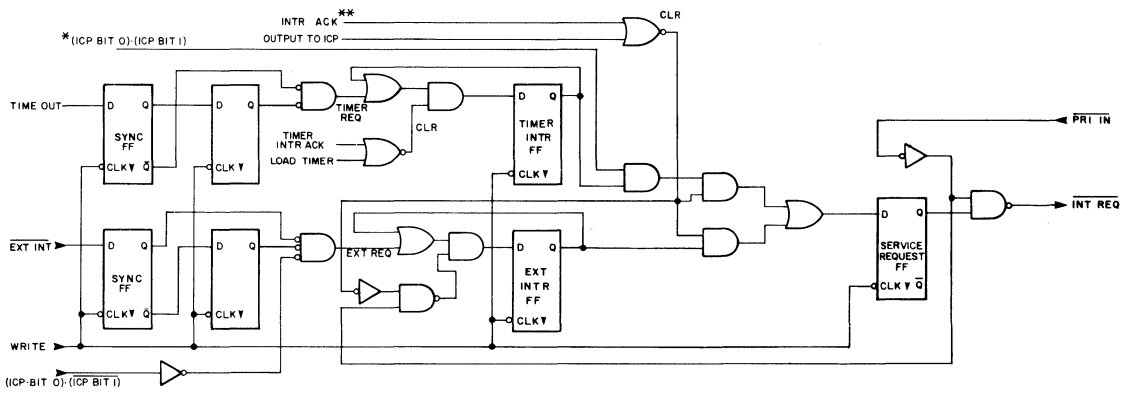

*ICP–INTERRUPT CONTROL PORT
**1 DURING EVENT G IN FIG 6

Figure 4

F8 Family

interrupt service. An internal pull-up to V_{DD} is provided by the MK 3850 CPU to the $\overline{\text{INT REQ}}$ input pin.

$\overline{\text{PRI IN}}$ is part of the interrupt priority chain. Each SMI has a $\overline{\text{PRI IN}}$ input but, it is important to note that the SMI does not have a $\overline{\text{PRI OUT}}$. This means that the SMI will be the last device in the daisy chain interrupt network. In a small system where only a CPU and a SMI are used, then $\overline{\text{PRI IN}}$ should be tied low. See Figure 5.

The SERVICE REQUEST flip-flop cannot be set if another interrupt request is in the process of being acknowledged anywhere in the system. If an interrupt request has been latched into the TIMER INTERRUPT flip-flop, or the EXTERNAL INTERRUPT flip-flop, the SMI logic waits until after the process of acknowledging the other interrupt before setting SERVICE REQUEST. This precaution is necessary to insure that the priority chain is not altered during acknowledgment. Chaos would result if half of the interrupt vector came from one device and the second half from some other device.

THE SERVICE REQUEST flip-flop is cleared after an interrupt from the SMI has been acknowledged. It is also cleared whenever the SMI interrupt control register is accessed by an output instruction.

The conditions for setting the TIMER INTERRUPT flip-flop and the EXTERNAL INTERRUPT flip-flop differ slightly. External interrupts must be enabled before the EXTERNAL INTERRUPT flip-flop can be set by a negative going transition of $\overline{\text{EXT INT}}$. However, TIMER INTERRUPT will be set by a timer TIME OUT independent of Interrupt Control Port bit 1. This means that the SMI can detect a time out interrupt that occurred while the external interrupt was enabled in the SMI.

The TIMER INTERRUPT flip-flop is cleared whenever the SMI's timer is loaded or when its timer interrupt has been acknowledged. The EXTERNAL INTERRUPT flip-flop is cleared whenever the SMI's interrupt control register is accessed by an output instruction, or when its external interrupt has been acknowledged.

INTERRUPT ACKNOWLEDGE SEQUENCE

Upon receiving an interrupt request, whether from an external source via $\overline{\text{EXT INT}}$ or from the internal timer, the SMI and CPU go through an interrupt sequence which results in the execution of an interrupt service routine located at the memory address pointed to by the Interrupt Address Vector. Figures 6 and 7 illustrate the interrupt sequence for the two cases. Events occurring in these sequences are labeled with the letters A through H. Events are described as follows.

EVENT A

The initial interrupt request arrives. The falling edge of $\overline{\text{EXT INT}}$ pin identified an external interrupt. The rising edge of interval timer output indicates a timeout.

EVENT B

The synchronizing flip-flop in the SMI control logic changes state.

EVENT C

The timer interrupt, or external interrupt flip-flop goes true, indicating the local interrupt logic's acknowledgment of the interrupt. The timer interrupt flip-flop will always respond and save the time-out occurrence, whereas the external interrupt flip-flop will only be set at this time if the external interrupt mode is enabled within the local control logic.

EVENT D

The $\overline{\text{INT REQ}}$ line is pulled low by the SMI, passing

INTERRUPT INTERCONNECTION

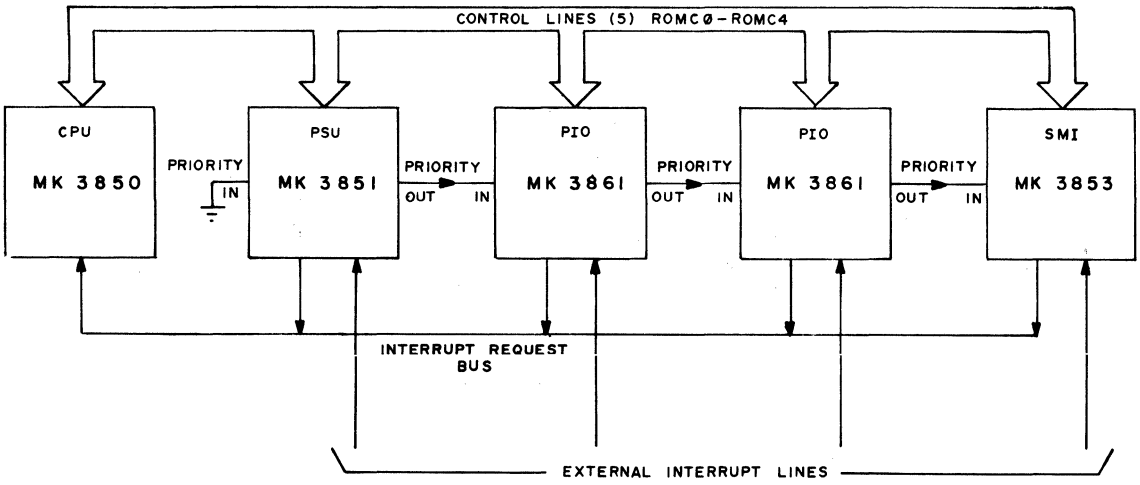

Figure 5

the request for servicing on to the CPU. The conditions that must be present for this to occur are:

The $\overline{\text{PRI IN}}$ pin must be low.

The proper enable state must exist in the local control logic for the type of interrupt (time or external). The system is not already into Event F due to servicing some other interrupt.

EVENT E

The CPU now begins its response to the $\overline{\text{INT REQ}}$, line by outputting the unique ROMC state H'10' inhibiting modification of interrupt priority logic. This will only occur when the following conditions are satisfied:

The CPU is executing the last cycle of an instruction (beginning an instruction fetch).

The ICB is enabled (ICB = 0).

The current instruction fetch is not protected (not a privileged instruction).

EVENT F

The CPU generates the interrupt acknowledge sequence of ROMC states as follows:

ROMC STATE

10 Inhibit modification of interrupt priority logic.

IC No function

0F Put lower byte of interrupt address vector on data bus

13 Put upper byte of interrupt address vector on data bus

00 Fetch instruction from memory (first instruction of interrupt service routine)

EVENT G

At this point the CPU begins fetching the first instruction of the interrupt service routine. In the SMI interrupt logic, the SERVICE REQUEST flip-flop and the appropriate INTERRUPT REQUEST flip-flop are cleared.

EVENT H

The CPU begins executing the first instruction of the interrupt service routine.

INTERRUPT ADDRESS VECTOR

During the interrupt acknowledge, the interrupting SMI provides a 16-bit interrupt address vector. The CPU causes this vector to be loaded into P0, so that program execution can branch to the routine that handles this particular interrupt. Fifteen bits of the interrupt vector are programmable from I/O ports 'OC'H and 'OD'H. Bit 7 cannot be programmed. It is set by the interrupt control logic to 0 if the timer interrupt is enabled or to a 1 if external interrupt is enabled. The interrupt vector is of the form: WWWW, XXXX, 0YYY, ZZZZ for timer interrupt and WWWW, XXXX, 1YYY, ZZZZ for external interrupt

TIMER INTERRUPT SEQUENCE

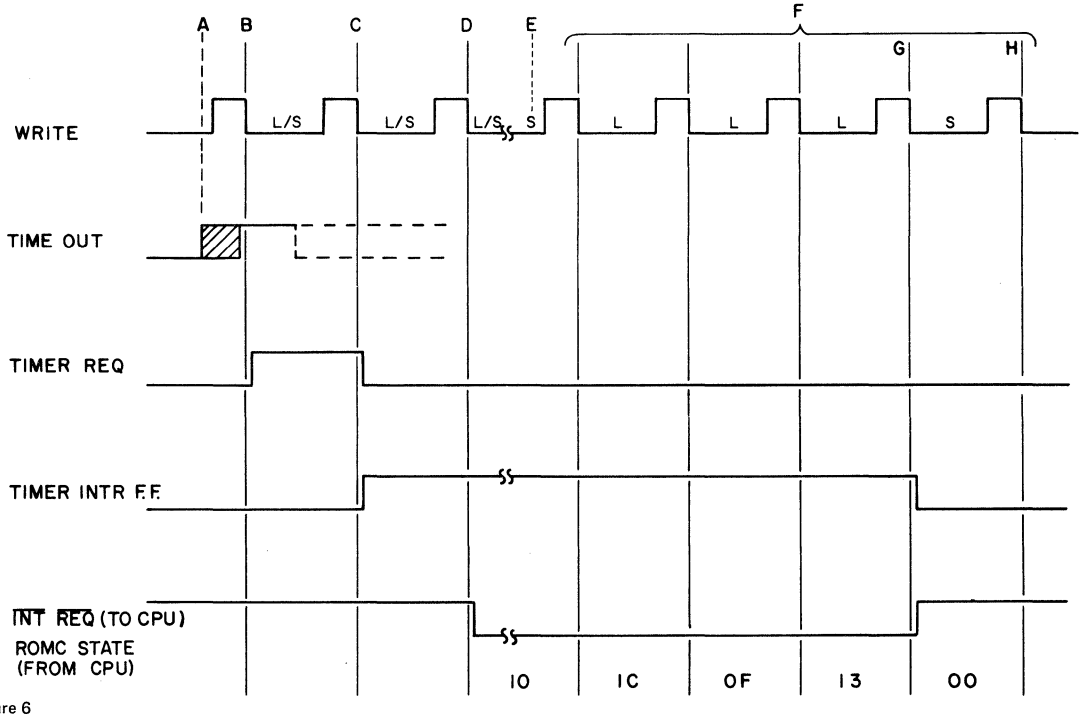

Figure 6

where W, X, Y and Z are the bits programmed by I/O ports '0C'H and '0D'H.

INTERRUPT SIGNALS TIMING

Timing for signals associated with the MK 3853 interrupt logic is shown in Figure 9.

EXTERNAL INTERRUPT SEQUENCE

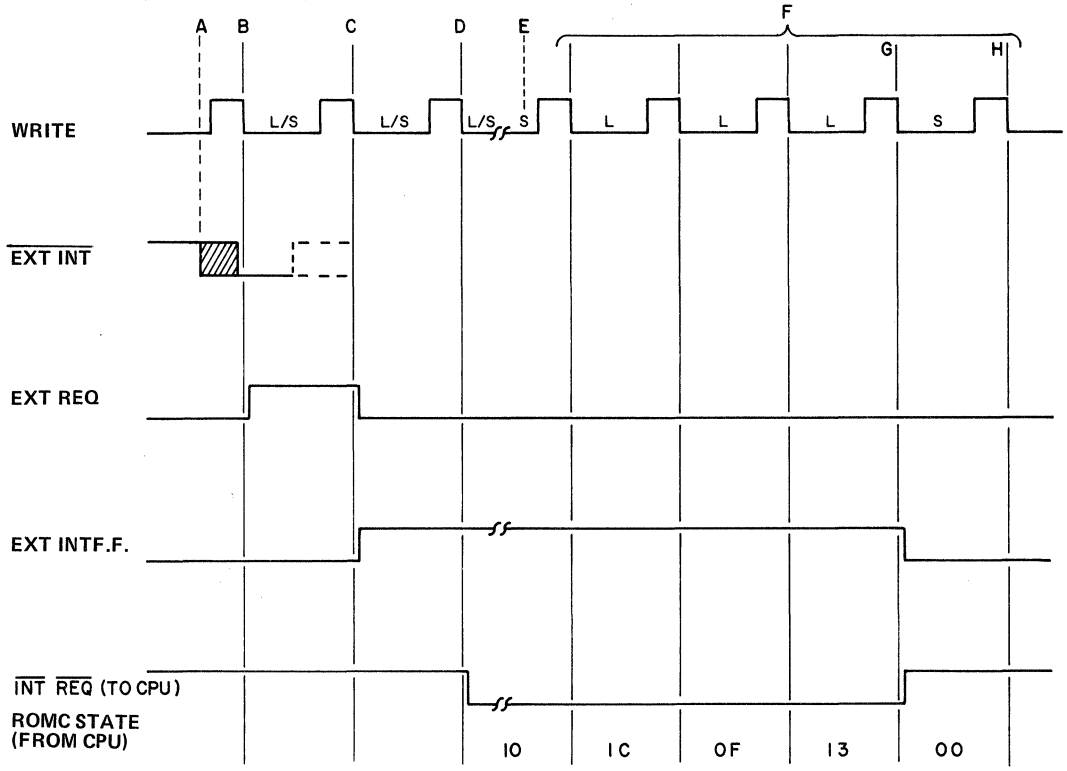

Figure 7

ELECTRICAL SPECIFICATIONS

ABSOLUTE MAXIMUM RATING (All voltages with respect to V_{SS}) *

V_{GG} ..... +15V to −0.3V
V_{DD} ..... +7V to −0.3V
All other inputs and outputs ..... +7V to −0.3V
Operating temperature, T_A (Ambient) ..... 0°C to +70°C
Storage temperature - Ambient (Ceramic) ..... −65°C to +150°C
Storage temperature - Ambient (Plastic) ..... −55°C to +125°C

*Stresses above those listed under "Absolute Maximum Ratings" may cause permanent damage to the device. This is a stress rating only and functional operation of the device at these or any other condition above those indicated in the operational sections of this specification is not implied. Exposure to absolute maximum rating conditions for extended periods may affect device reliability.

RECOMMENDED DC OPERATING CONDITIONS

($0°C \leqslant T_A \leqslant 70°C$)

SYMBOL	PARAMETER	MIN	TYP	MAX	UNITS	TEST CONDITIONS
V_{DD}	Supply	4.75	5.0	5.25	Volts	
V_{GG}	Voltage	11.4	12.0	12.6	Volts	
V_{SS}		0	0	0	Volts	

DC ELECTRICAL CHARACTERISTICS

($0°C \leqslant T_A \leqslant 70°C$) ($V_{DD}$ = +5V ± 5%; V_{GG} = +12V ± 5%; V_{SS} = 0V)

SYMBOL	PARAMETER	MIN	TYP	MAX	UNITS	TEST CONDITIONS
I_{DD}	V_{DD} Current		35	70	mA	f = 2 MHz, Outputs unloaded
I_{GG}	I_{GG} Current		13	30	mA	f = 2 MHz, Outputs unloaded

DATA BUS (DB0-DB7)

SYMBOL	PARAMETER	MIN	MAX	UNITS	TEST CONDITIONS
V_{IH}	Input High Voltage	3.5	V_{DD}	Volts	
V_{IL}	Input Low Voltage	V_{SS}	.8	Volts	
V_{OH}	Output High Voltage	3.9	V_{DD}	Volts	I_{OH} = −100μA
V_{OL}	Output Low Voltage	V_{SS}	.4	Volts	I_{OL} = 1.6mA
I_{IH}	Input High Current		1	μA	$V_{IN} = V_{DD}$, three-state mode
I_{IL}	Input Low Current		−1	μA	$V_{IN} = V_{SS}$, three-state mode
C_I	Capacitance		10	pF	Three-state mode

PRIORITY IN ($\overline{\text{PRI IN}}$), CONTROL LINES (ROMCO–ROMC4) AND CLOCK LINES (Φ, WRITE)

SYMBOL	PARAMETER	MIN	MAX	UNITS	TEST CONDITIONS
V_{IH}	Input High Voltage	3.5	V_{DD}	Volts	
V_{IL}	Input Low Voltage	V_{SS}	.8	Volts	
I_L	Leakage Current		1	μA	$V_{IN} = V_{DD}$
C_I	Capacitance		10	pF	

ADDRESS LINES (ADDR0-ADDR15) and $\overline{\text{RAM WRITE}}$

SYMBOL	PARAMETER	MIN	MAX	UNITS	TEST CONDITIONS
V_{OH}	Output High Voltage	3.9	V_{DD}	Volts	I_{OH} = −1mA
V_{OL}	Output Low Voltage		.4	Volts	I_{OL} = 3.2mA
I_L	Leakage Current		1	μA	$V_{IN} = V_{DD}$

INTERRUPT REQUEST ($\overline{\text{INT REQ}}$)

SYMBOL	PARAMETER	MIN	MAX	UNITS	TEST CONDITIONS
V_{OH}	Output High Voltage				Open Drain Output [1]
V_{OL}	Output Low Voltage	V_{SS}	.4	Volts	I_{OL} = 1mA
I_L	Leakage Current		1	μA	$V_{IN} = V_{DD}$

EXTERNAL INTERRUPT ($\overline{\text{EXT INT}}$)

SYMBOL	PARAMETER	MIN	MAX	UNITS	TEST CONDITIONS
V_{IH}	Input High Voltage	3.5	15	Volts	
V_{IL}	Input Low Voltage	V_{SS}	1.2	Volts	
V_{IC}	Input Clamp Voltage		15	Volts	I_{IH} = 185 μA
I_{IH}	Input High Current		10	μA	$V_{IN} = V_{DD}$
I_{IL}	Input Low Current	−250	−750	μA	$V_{IN} = V_{SS}$

Notes:
1. Pull-up resister to V_{DD} on CPU.

REGDR

SYMBOL	PARAMETER	MIN	MAX	UNITS	TEST CONDITIONS
V_{OH}	Output High Voltage	3.9	V_{DD}	Volts	$I_{OH} = -300\ \mu A$
V_{OL}	Output Low Voltage	V_{SS}	.4	Volts	$I_{OL} = 2mA$
V_{IH}	Input High Voltage	3.5	V_{DD}	Volts	Internal Pull-up to V_{DD}
V_{IL}	Input Low Voltage	V_{SS}	.8	Volts	
I_{IL}	Input Low Current	−3.5	−14.0	mA	V_{IN} = .4V and Device outputting a logic "1"
I_L	Leakage Current		1	μA	$V_{IN} = V_{DD}$

CPU READ

SYMBOL	PARAMETER	MIN	MAX	UNITS	TEST CONDITIONS;
V_{OH}	Output High Voltage	3.9	V_{DD}	Volts	$I_{OH} = -1mA$
V_{OL}	Output Low Voltage	V_{SS}	.4	Volts	$I_{OL} = 2mA$
I_L	Leakage Current		1	μA	$V_{IN} = V_{DD}$

AC ELECTRICAL CHARACTERISTICS

($0°C \leqslant T_A \leqslant 70°C$) ($V_{DD}$ = + 5V ± 5%; V_{GG} = + 12V ± 5%; V_{SS} = 0V)

SYMBOL	PARAMETER	MIN	TYP	MAX	UNITS	TEST COND
$P\Phi$	Φ CLOCK Period	0.5		10	μS	
PW_1	Φ Pulse Width	180		PΦ−180	nS	
td_1	Φ to write + delay	0		300	nS	CL = 100pF
td_2	Φ to write − delay	0		250	nS	CL = 100pF
PW_2	Write Pulse Width	PΦ−100		PΦ	nS	
PW_S	Write Period; Short		4 PΦ		nS	
PW_L	Write Period; Long		6 PΦ		nS	
td_3	Write to ROMC Delay			750	nS	
td_4	Write to DB Input Delay			2PΦ+1.0	μS	
td_6	Write to DB Output Delay	2PΦ+100−td_2	2PΦ+200	2PΦ+800−td_2	nS	CL = 100pF
tad_1	Address delay if P0 (Instruction by immediate data)	50	300	500	nS	C_L = 500pF
tad_2	Address delay if DC (Operand fetch) or WRITE cycle	2Φ+50−td_2		2PΦ+620−td_2	nS	C_L = 500pF
tcr_1	CPU READ − Delay	50	250	450	nS	50pF
tcr_2	CPU READ + Delay	2PΦ+50−td_2		2PΦ+400−td_2	nS	50pF
tw_1	$\overline{\text{RAM WRITE}}$ − Delay	4PΦ+50−td_2		4PΦ+450−td_2	nS	500pF
tw_2	$\overline{\text{RAM WRITE}}$ + Delay	5PΦ+50−td_2		5PΦ+300−td_2	nS	500pF
tw_p	$\overline{\text{RAM WRITE}}$ Pulse Width	350		PΦ	nS	500pF
trg_1	WRITE to REGDR −Delay	70	300	500	nS	50pF
trg_2	WRITE to REGDR + Delay	2PΦ+80−td_2		2PΦ+500−td_2	nS	50pF

F8 Family

AC ELECTRICAL CHARACTERISTICS (Continued)

SYMBOL	PARAMETER	MIN	TYP	MAX	UNITS	TEST CONDITIONS
t_{r1}	WRITE to $\overline{\text{INT REQ}}$ – Delay			430	nS	C_L = 100 pF [1]
t_{r2}	WRITE to $\overline{\text{INT REQ}}$ + Delay			1.65	μs	C_L = 100 pF [3]
t_{pr1}	$\overline{\text{PRI IN}}$ to $\overline{\text{INT REQ}}$ – Delay			240	nS	C_L = 100 pF [2]
t_{pr2}	$\overline{\text{PRI IN}}$ to $\overline{\text{INT REQ}}$ + Delay			1.5	μs	C_L = 100 pF
t_{ex}	$\overline{\text{EXT INT}}$ Setup Time	400			nS	

NOTES:
1. Assume PRIORITY IN was enabled ($\overline{\text{PRI IN}}$ = 0) in previous F8 cycle before interrupt is detected in the SMI.
2. SMI has interrupt pending before $\overline{\text{PRIORITY IN}}$ is enabled.
3. Assume pin tied to $\overline{\text{INT REQ}}$ input of 3850 CPU.

TIMING DIAGRAM

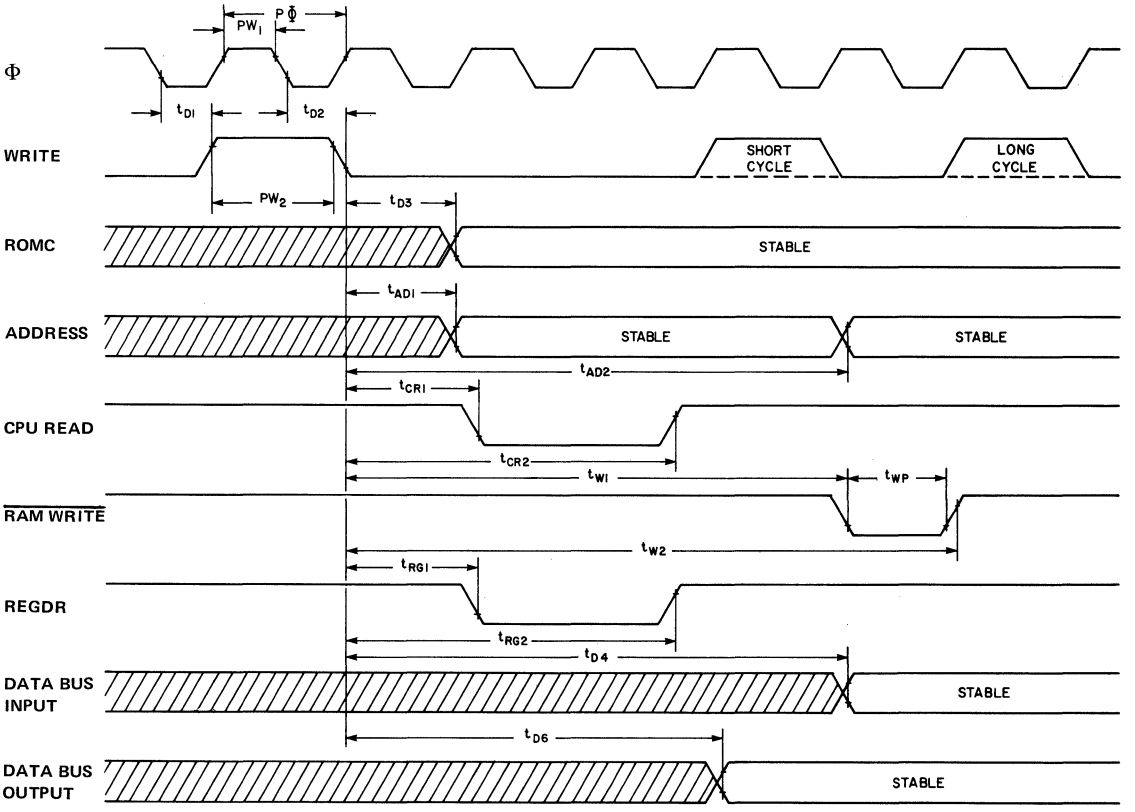

Figure 8

TIMING DIAGRAM

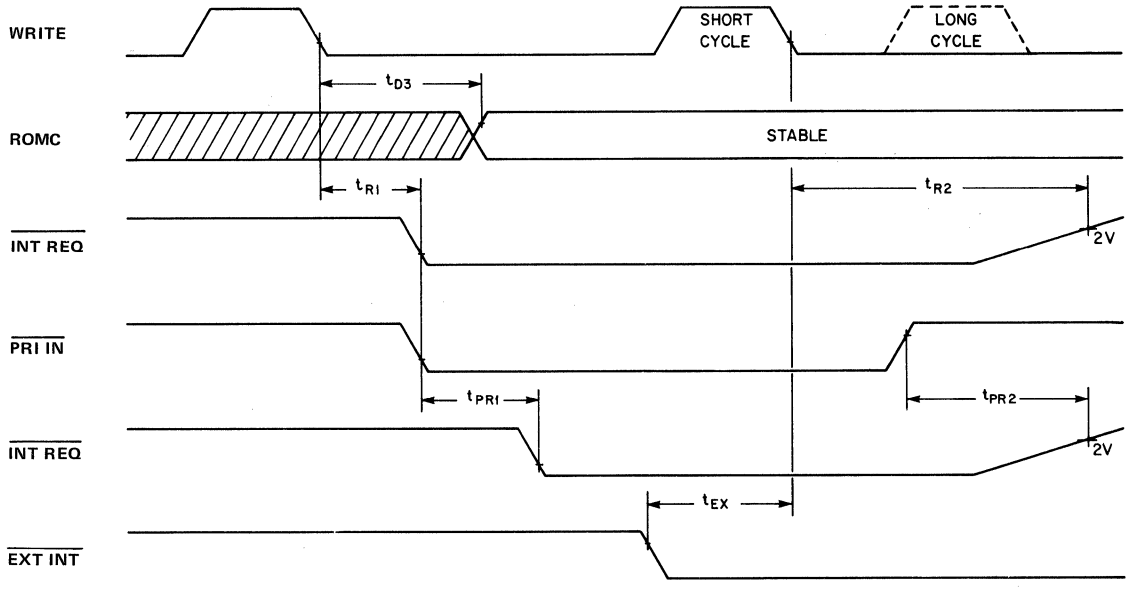

Figure 9

TIMING DIAGRAM

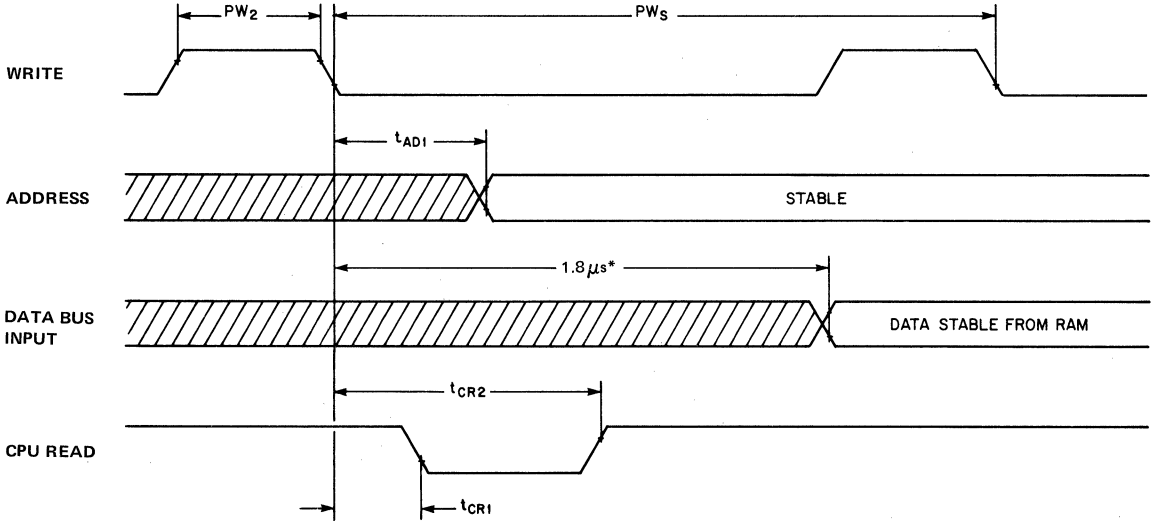

MK 3853 SMI TIMING SIGNALS OUTPUT DURING A SHORT CYCLE MEMORY READ USING P0

Figure 10

*NOTE: This is the time at which the CPU will strobe data in from the memory. (Φ = 2 MHz) Refer to MK3850 CPU data sheet for further information.

TIMING DIAGRAM

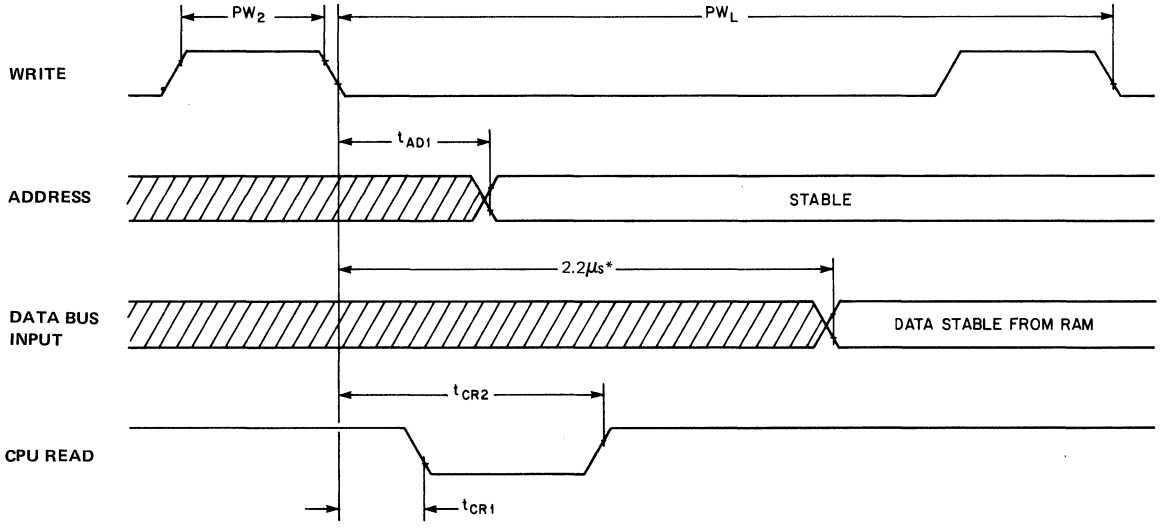

MK 3853 SMI TIMING SIGNALS OUTPUT DURING A LONG CYCLE MEMORY READ, WITH ADDRESS OUT OF PROGRAM COUNTER

Figure 11

TIMING DIAGRAM

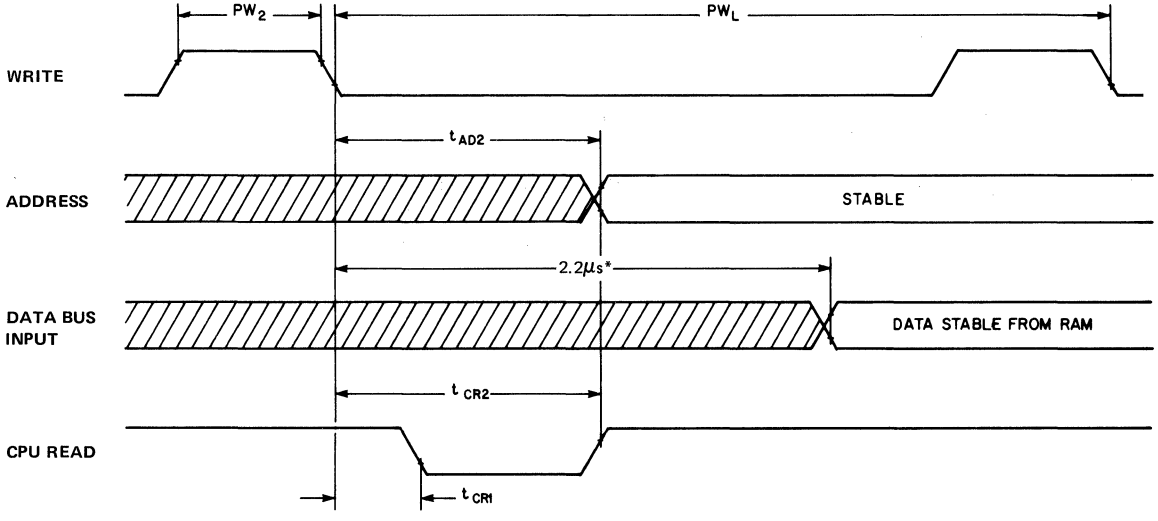

MK 3853 SMI TIMING SIGNALS OUTPUT DURING A LONG CYCLE MEMORY READ, WITH ADDRESS OUT OF DATA COUNTER

Figure 12

*NOTE: This is the time at which the CPU will strobe data in from the memory. (Φ = 2 MHz) Refer to MK3850 CPU data sheet for further information.

TIMING DIAGRAM

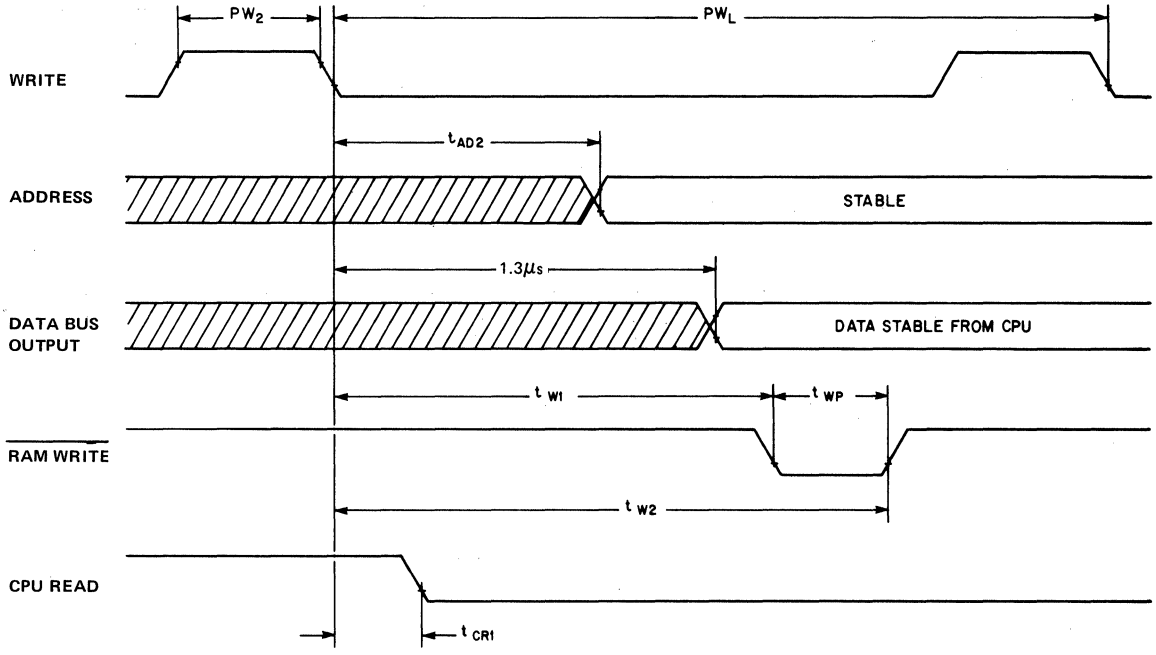

MK 3853 SMI TIMING SIGNALS OUTPUT DURING A WRITE TO MEMORY

Figure 13

*NOTE: This is the time at which the CPU will output data to memory. (Φ= 2 MHz) Refer to MK3850 CPU data sheet for further information.

F8 Family

MK 3853 APPLICATION

Figure 9 shows a typical application for interfacing the MK 3853 SMI to static memories. This particular example shows a memory system using the MK 2708 1K x 8 EPROM and the MK 4102 1K x 1 Static RAM. Decoding is provided in 1K boundaries for up to 8K of memory. This should be more than adequate for most systems. However, if memory expansion is desired, decoders can be added to provide additional decoding.

The input to the memory array is isolated from the F8 data bus to avoid capacitive loading of the data bus and the output of the memory array is buffered with C/MOS drivers to meet the 3.5 V_{IH} requirement for the MK 3850 CPU.

MK 3853 APPLICATION

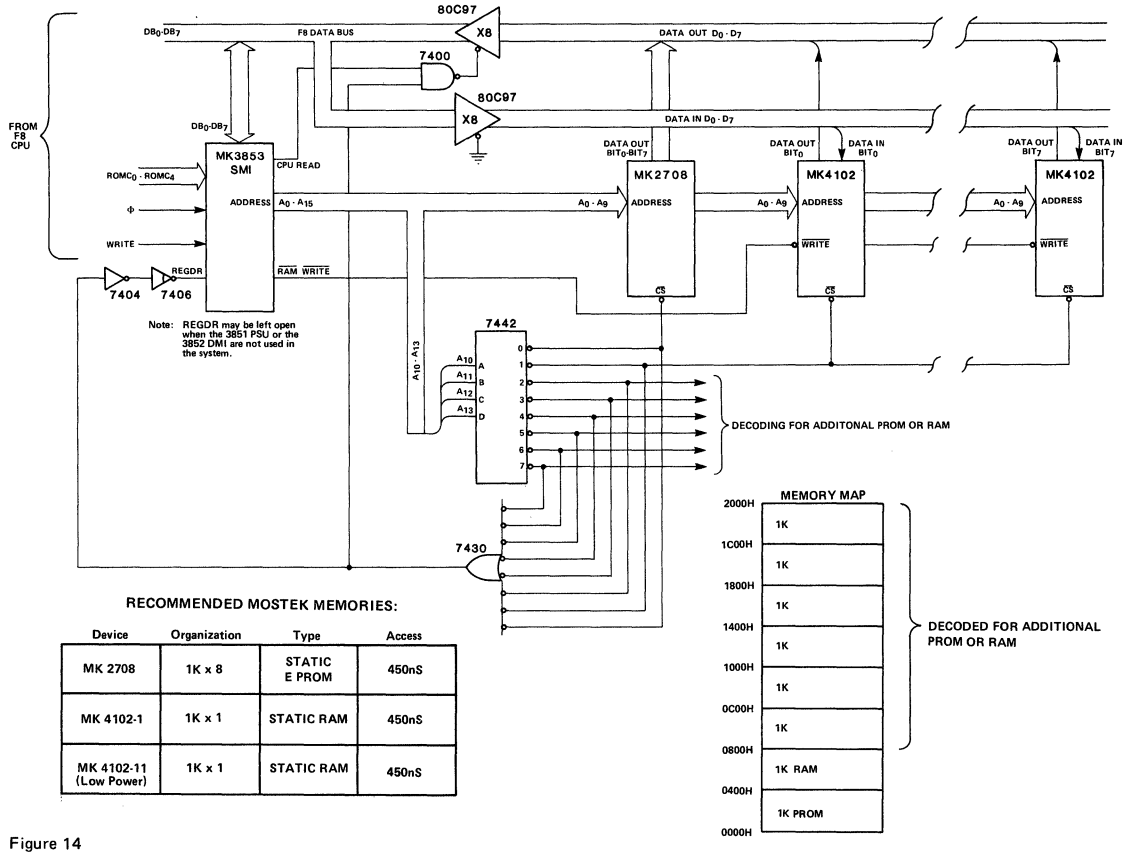

RECOMMENDED MOSTEK MEMORIES:

Device	Organization	Type	Access
MK 2708	1K x 8	STATIC E PROM	450nS
MK 4102-1	1K x 1	STATIC RAM	450nS
MK 4102-11 (Low Power)	1K x 1	STATIC RAM	450nS

Figure 14

F8 Family

PACKAGE DESCRIPTION

40-lead plastic package

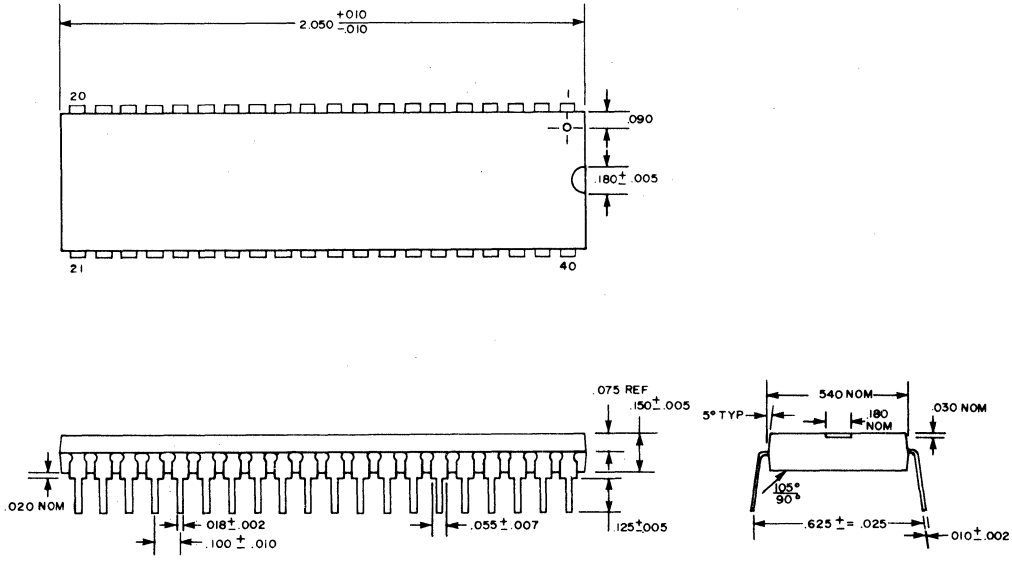

40-lead side-braze ceramic package

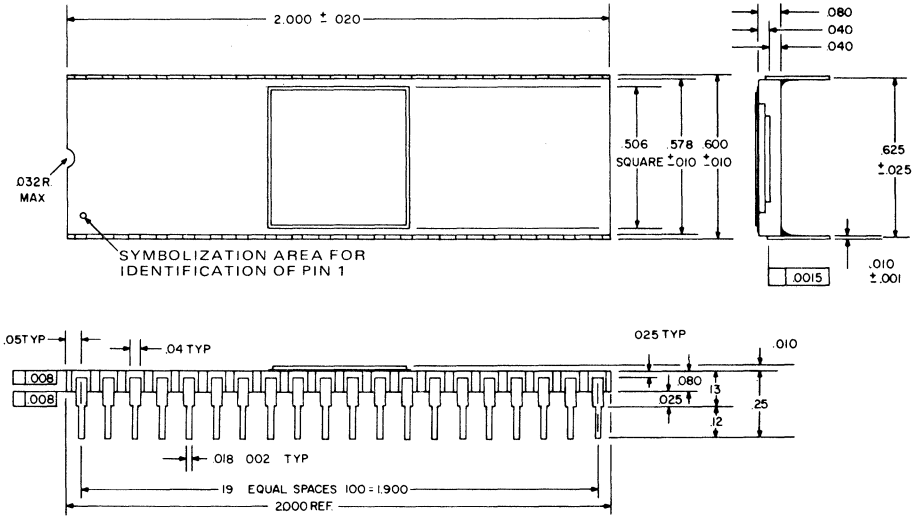

ORDERING INFORMATION		
MK3853P	0°C To 70°C	Ceramic
MK3853N	0°C To 70°C	Plastic
MK3853P-10	−40°C To +85°C	Ceramic
MK3853N-10	−40°C To +85°C	Plastic
MK3853P-20	−55°C To +125°C	Ceramic
MK3853N-20	−55°C To +125°C	Plastic