F8 Direct Memory Access MK3854

FEATURES

- ☐ 2 μsec cycle time
- ☐ Provides strobe for timing peripherals
- ☐ 16-bit address
- ☐ 12-bit byte count
- ☐ Control registers
- ☐ Port address selection
- ☐ +5V and +12V power supplies
- ☐ Low power dissipation—280mW

GENERAL DESCRIPTION

The MK 3854 Direct Memory Access (DMA) chip facilitates high speed data transfer between the main memory of an F8 system and peripherals. This transfer occurs without suspending normal operation of the processor, allowing DMA with no reduction of program execution speed. The MK 3854 DMA is manufactured using N-channel, Isoplanar MOS technology. Power dissipation is low, typically less than 280mW.

PIN NAME	DESCRIPTION	TYPE
DB0-DB7	Data bus lines	Bidirectional three state
ADDR0-ADDR15	Address lines	Output three state
Φ, WRITE	Clock lines	Input
LOAD REG/ READ REG	Registers load/ read line	Input
P1, P2	Port address select	Input
MEM IDLE	Memory idle line	Input
XFER REQ	Transfer request line	Input
ENABLE, DIRECTION	Control status lines	Output
DWS, XFER	DMA Write slot, transfer	Output
STROBE	Output strobe line	Output
V_{SS}, V_{DD}, V_{GG}	Power lines	Input

F8 FAMILY

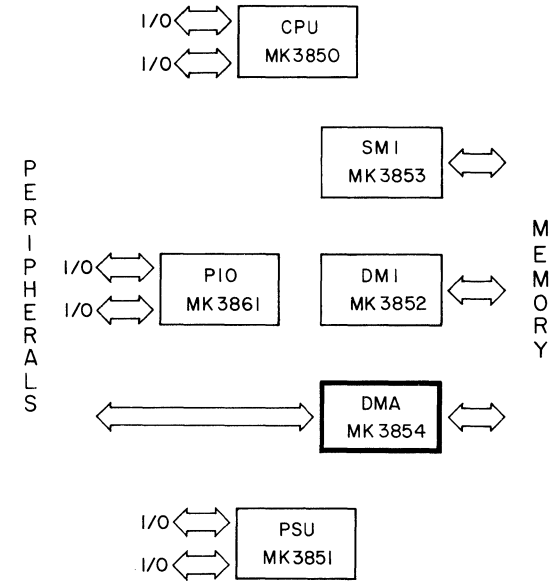

PIN CONNECTIONS

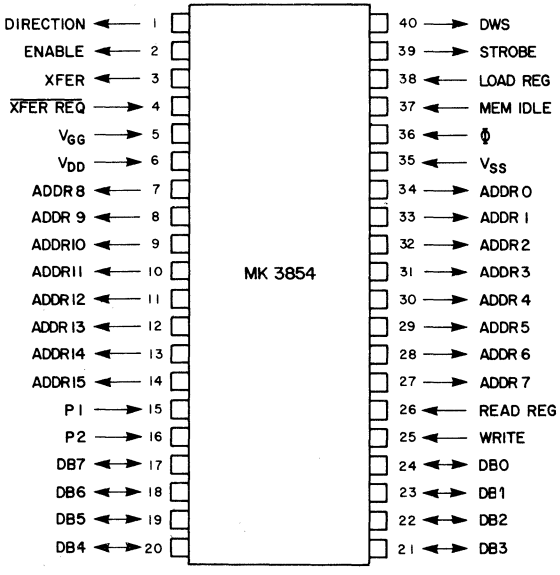

F8 Family

MK 3854 DMA FUNCTIONAL DIAGRAM

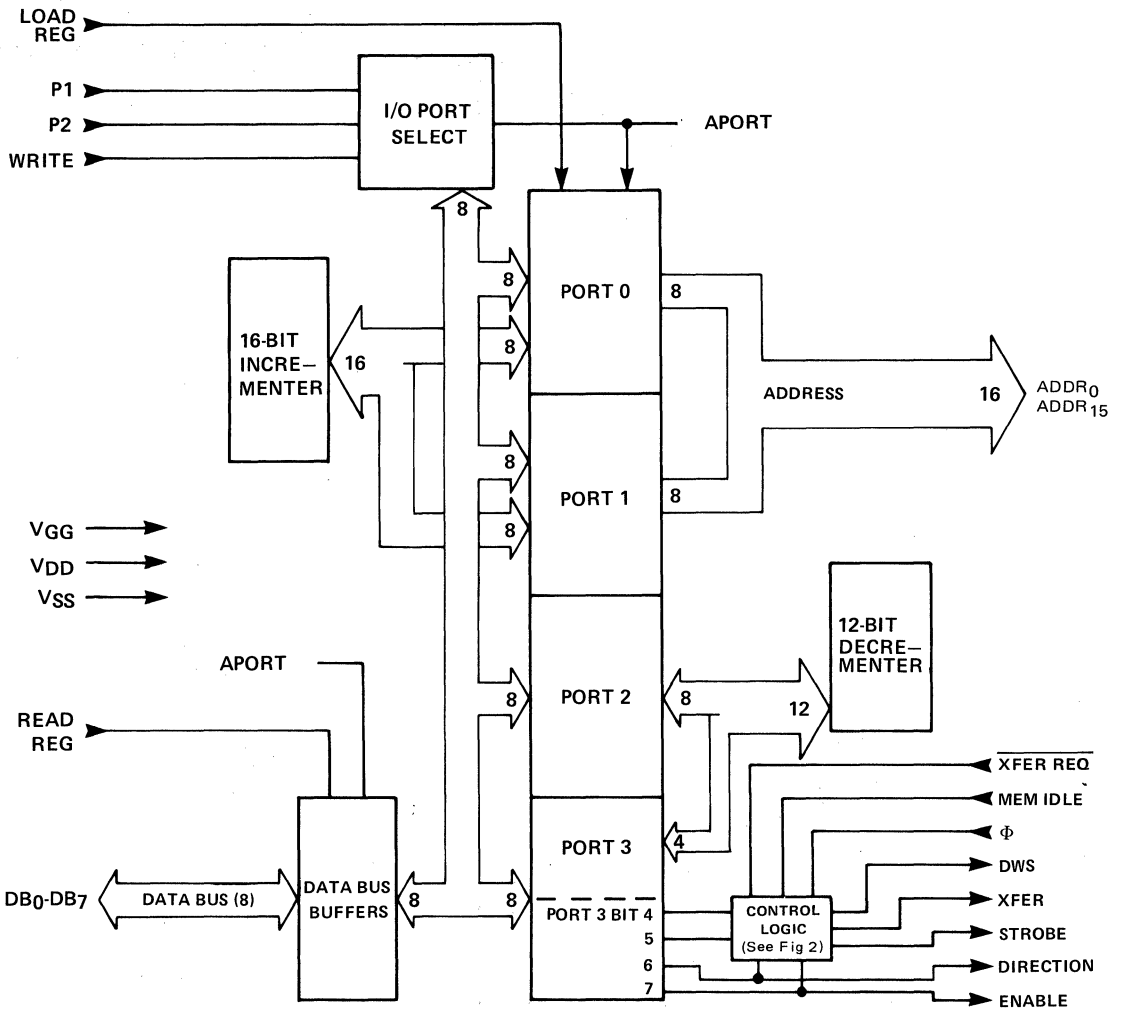

Figure 1

FUNCTIONAL PIN DESCRIPTION

Φ and **WRITE** are clocks provided by the MK 3850 CPU. Φ is only used in the generation of STROBE. WRITE is only used for loading I/O ports and data bus monitoring for I/O match.

READ REG and LOAD REG are control signals that must be input to the MK 3854 DMA device in lieu of the five ROMC state signals. Since the MK 3854 DMA device only responds to ROMC states 1A and 1B, external logic must generate READ REG true for ROMC state 1B and LOAD REG true for ROMC state 1A, as follows:

READ REG = ROMC0-ROMC1-$\overline{\text{ROMC2}}$-ROMC3-ROMC4
LOAD REG = $\overline{\text{ROMC0}}$-ROMC1-$\overline{\text{ROMC2}}$-ROMC3-ROMC4

ADDR0 through ADDR15 are the 16 address lines which address the memory location to be accessed during the current DMA operation. This memory address originates in I/O ports 0 and 1 as illustrated in Figure 1. These lines are in a high impedance state when no DMA operation is taking place (XFER = 0).

MEM IDLE is a timing signal input to the MK 3854 DMA device from the MK 3852 DMI device. This signal is output high to identify time slots when memory is available for DMA access.

$\overline{\text{XFER REQ}}$ is a control signal which must be input to the MK 3854 DMA device by an external device which is controlling the DMA transfer rate (I/O port 3, bit 4 must be set to zero in this case). When

low, this signal causes a byte of data to be transferred to or from memory during the next available DMA time slot. This signal is latched while MEM IDLE = 1. Changes during a DMA time slot are therefore ignored.

DB0 through DB7 are the bidirectional data bus lines which link the MK 3850 CPU with all other devices in the F8 system. Note that only data being transferred to or from one of the four MK 3854 I/O ports uses the data bus pins. Data being transferred to or from memory under DMA control completely bypasses the MK 3854 DMA device.

P1 and P2 must be strapped externally to determine the addresses of the four MK 3854 DMA device I/O ports as illustrated in the section titled 'I/O ports'.

XFER is a control output which identifies the time slots when a DMA data transfer is occurring. XFER is high whenever, MEM IDLE is high and other conditions specify that a DMA data transfer is to occur during the next available time slot. These conditions are that a DMA transfer is specified either by bit 4 of I/O port 3 being set to 1, or by $\overline{\text{XFER REQ}}$ being low while DMA has been enabled and the currently executed instruction is not attempting to access the DMA device's I/O ports. ENABLE is provided by I/O port 3 bit 7. DMA data transfers are inhibited while an instruction is accessing the I/O ports of the MK 3854 DMA device since these instructions may be in the process of modifying the parameters that control the DMA operation. This inhibit is generated by ANDing the LOAD REG input with an internal I/O port selected signal.

DIRECTION is a control output which reflects the contents of I/O port 3, bit 6. When high, data is being written into memory. When low, data is being read from memory.

ENABLE is a control output which reflects the contents of I/O port 3, bit 7. When high, DMA data transfers may occur. When low, DMA is disabled.

DWS is a DMA write slot signal. It is the logical AND of XFER and DIRECTION, thus it is true during any DMA write to memory.

STROBE is a DMA transfer signal output that is used for strobing data and for generating RAM WRITE. STROBE is high only during the second occurrence of Φclock high after MEM IDLE goes true, provided that XFER is also true.

DEVICE ORGANIZATION

This section describes the operation of the basic functional elements of the MK 3854 DMA. These elements are shown on the DMA block diagram (fig. 1).

I/O PORTS

The MK 3854 DMA controller has four 8-bit registers which are addressed as I/O ports.

Since there may be up to four DMA controllers in an F8 system, 16 I/O port addresses are reserved for the exclusive use of DMA controllers, as shown in Table 1.

The four I/O port address used by a DMA are defined by the two signals (P1 and P2) which are input to the DMA controller and become bits 2 and 3 of the I/O port address. This may be illustrated as follows:

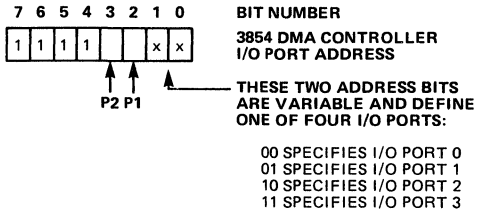

MK 3854 DMA I/O PORT ADDRESSES

FUNCTION OF I/O PORT	FIRST 3854	SECOND 3854	THIRD 3854	FOURTH 3854
Address, L.O. Byte (PORT0)	F0	F4	F8	FC
Address, H.O. Byte (PORT1)	F1	F5	F9	FD
Count, L.O. Byte (PORT2)	F2	F6	FA	FE
Count, H.O. Four bits, and Control (PORT3)	F3	F7	FB	FF

Table 1

The four I/O ports are not initialized during the power on reset.

DMA CONTROL LOGIC

This logic provides the control signals required to implement DMA data transfers. Figure 2 shows the detailed logic that generates these control signals.

LOAD REG/READ REG

The LOAD REG and READ REG signal inputs to the DMA require special mention.

Most F8 support devices have a control unit which decodes the five ROMC signals output by the MK 3850 CPU. However, the MK 3854 DMA controller will only respond to ROMC states 1A and 1B, which are "write to I/O port" and "read from I/O port" controls, respectively. All other states constitute "No Operations". Therefore, instead of having a control unit, external logic is used to decode these ROMC state signals, creating READ REG in response to state 1B, and LOAD REG in response to state 1A.

INCREMENT AND DECREMENT LOGIC

This logic is used to increment the address in ports 0 and 1 and to decrement the byte count in ports 2 and 3.

THE DATA AND ADDRESS BUSSES

Note carefully that whereas the address bus is used to output the address of the memory location which will be accessed during the next DMA operation, MK 3854 DMA controller's connection to the data bus is used only to transfer data between MK 3854 DMA device I/O ports and the CPU. The data bus is not used to transfer data bytes during a DMA operation.

DMA CONTROL SIGNALS

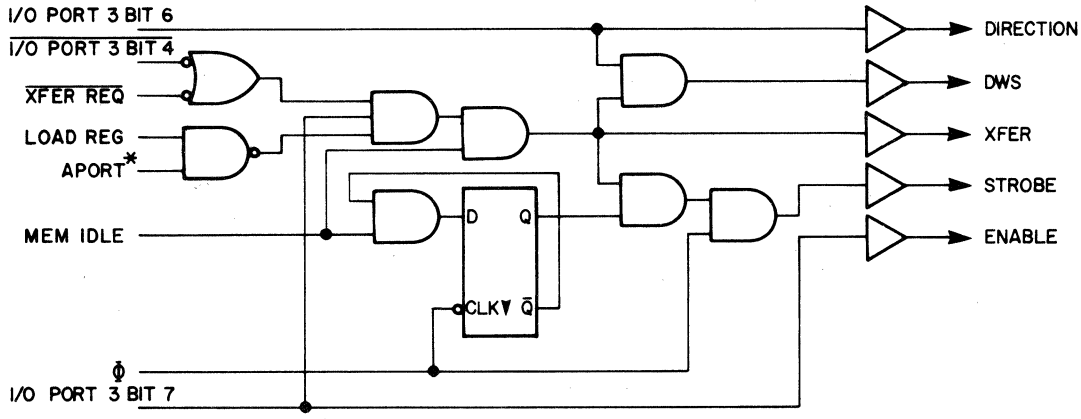

Figure 2

*AN I/O PORT WAS BEING SELECTED

OPERATIONAL DESCRIPTION

The MK 3854 DMA device makes use of time slots during which the CPU is not accessing memory. During these time slots, the MK 3854 DMA device generates data transfer control signals which enable data to be read out of memory, or to be written into memory. The MK 3852 DMI device outputs the MEM IDLE signal to identify time slots available for DMA access.

In addition to providing data transfer control signals, the MK 3854 DMA controller outputs the address of the memory location which is to be accessed.

The four I/O ports of a DMA device must be loaded with appropriate data to control the DMA operation. I/O ports are loaded using OUT instructions. The contents of I/O ports may be read at any time using IN instructions.

Before a DMA operation starts the beginning address of the memory buffer from which data will be read, or to which data will be written, must be loaded into I/O ports 0 and 1. I/O ports 2 and 3 are used to define the length of the memory buffer which is to be accessed plus various DMA options and controls, as illustrated in Figure 3.

With reference to Figure 3, observe that 12 bits are set aside to define the memory buffer length (byte count), therefore memory buffers up to 4096 bytes in length may be written into or read via DMA. A byte count of 01 transfers one byte; a count of 00 transfers 4096 bytes.

Bit 7 of I/O port 3 may be used at any time to start or stop DMA operations. During normal initiation sequence this bit will be zero while I/O ports 0, 1 and 2 are loaded with appropriate data. Then in order to initiate the DMA operations, I/O port 3 will be loaded with a data byte that includes a 1 in the high order bit. However, in the case of repeated block transfers, it may only be necessary to reload port 3, and port 2 will hold zero and the contents of port 0 and 1 will be the address of the last byte previously transferred plus 1.

The direction of the DMA data transfer is determined by bit 6 of I/O port 3. If this bit is zero, data will be read out of memory by the external device. If this bit is one, data will be written into memory by the external device.

The rate of DMA data transfer is determined by bit 4 of I/O port 3. If this bit is zero, then the external device must provide a transfer request (XFER REQ) signal whenever it is ready for a DMA data transfer. The actual data transfer will then occur during the next DMA slot, as identified by MEM IDLE high. The external device controls DMA transfer rate in this mode. If bit 4 of I/O port 3 is 1, the MK 3854 DMA controller assumes that external logic is ready for a DMA transfer whenever MEM IDLE high identifies a DMA slot. In this mode, the F8 system controls DMA transfer rate.

Each time a DMA data transfer occurs, logic within the MK 3854 DMA controller that is clocked by XFER increments the memory address in I/O ports 0 and 1 and decrements the byte counter in I/O ports 2 and 3. If bit 5 of I/O port 3 is zero, then DMA transfer will automatically halt and clear bit 7—the enable bit—as soon as the byte counter is decremented to zero. If bit 5 of I/O port 3 is 1, however, the byte count is ignored and DMA data transfer will continue until halted by an OUT instruction setting bit 7 of I/O port 3 to zero. If continuous DMA data transfer is specified by bit 5 of I/O port 3 being set to 1, then the memory address in I/O port 0 and 1 will still be incremented and the byte counter decremented after each DMA access even though the byte counter is ignored.

DMA registers are loaded and read when the MK 3850 CPU executes I/O instructions that access the DMA registers. The I/O instructions use the DATA BUS to transmit the I/O address in one instruction cycle and to transfer data during the following instruction cycle. The appropriate control signal, LOAD REG or READ REG, will become active during this second cycle. The DMA will load one of its registers during a cycle with LOAD REG high if the I/O address, which had been on the data bus during the previous

cycle, matched a DMA port address. The register is loaded and the address comparator is up-dated by the WRITE clock. These are the only functions of WRITE in the MK 3854 DMA. Likewise a DMA chip will drive the contents of a selected register onto the DATA BUS only while READ REG is high if there was a similar address match during the prior cycle. I/O address assignment is made using pins P1 and P2.

USE OF PORT 2 AND PORT 3 AS DMA CONTROLS

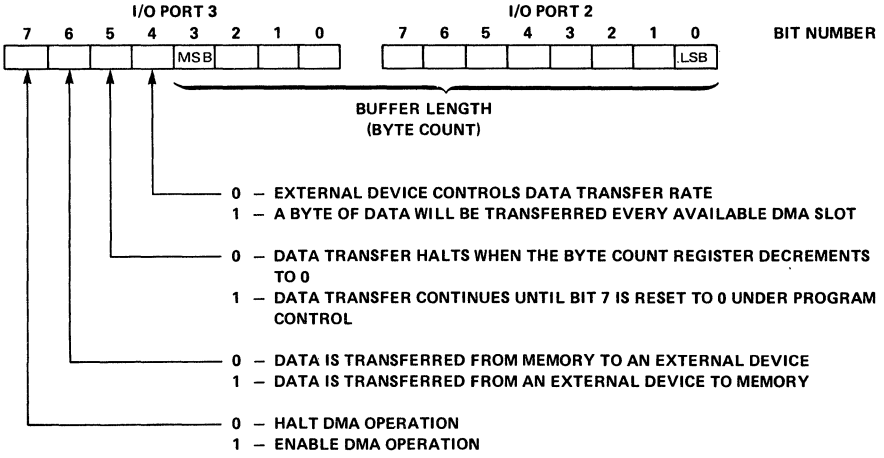

Figure 3

ELECTRICAL SPECIFICATIONS

ABSOLUTE MAXIMUM RATINGS (Above which useful life may be impaired)

V_{GG} ..... +15V to –0.3V
V_{DD} ..... +7 to –0.3V
All other Inputs and Outputs ..... +7V to –0.3V
Storage Temperature ..... –55°C to + 150°C
Operating Temperature ..... 0°C to + 70°C

Note: All voltages with respect to V_{SS}.

DC CHARACTERISTICS: V_{SS} = 0V, V_{DD} = +5V ± 5%, V_{GG} = +12V ± 5%, T_A = 0 to + 70°C

SUPPLY CURRENTS

SYMBOL	PARAMETER	MIN	TYP	MAX	UNITS	TEST CONDITIONS
I_{DD}	V_{DD} Current		20	40	mA	f = 2MHz, Outputs Unloaded
I_{GG}	V_{GG} Current		15	28	mA	f = 2MHz, Outputs Unloaded

DC SIGNAL CHARACTERISTICS

SIGNAL	SYMBOL	PARAMETER	MIN	MAX	UNITS	TEST CONDITIONS
DATA BUS (DB0-DB7)	V_{IH}	Input High Voltage	3.5	V_{DD}	Volts	
	V_{IL}	Input Low Voltage	V_{SS}	0.8	Volts	
	V_{OH}	Output High Voltage	3.9	V_{DD}	Volts	I_{OH} = –100 μA
	V_{OL}	Output Low Voltage	V_{SS}	0.4	Volts	I_{OL} = 1.6mA
	I_{IH}	Input High Current		1	μA	V_{IN} = 6V, three-state mode
	I_{IL}	Input Low Current		–1	μA	V_{IN} = V_{SS} three-state mode
ADDRESS LINES	V_{OH}	Output High Voltage	3.9	V_{DD}	Volts	I_{OH} = –1 mA
(ADDR0-ADDR15)	V_{OL}	Output Low Voltage	V_{SS}	0.4	Volts	I_{OL} = 3.2 mA
	I_L	Leakage Current		1	μA	V_{IN} = 6V, three-state mode
ENABLE, DIRECTION	V_{OH}	Output High Voltage	3.9	V_{DD}	Volts	I_{OH} = –100 μA

Table 2

(continued)

(Table 2 continued)

SIGNAL	SYMBOL	PARAMETER	MIN	MAX	UNITS	TEST CONDITIONS
DWS (DMA WRITE SLOT), XFER, STROBE	V_{OL}	Output Low Voltage	V_{SS}	0.4	Volts	I_{OL} = 1.6 mA
	I_L	Leakage Current		1	μA	V_{IN} = 6V
MEM IDLE, $\overline{\text{XFER REQ}}$	V_{IH}	Input High Voltage	3.5	V_{DD}	Volts	
	V_{IL}	Input Low Voltage	V_{SS}	0.8	Volts	
	I_L	Leakage Current		1	μA	V_{IN} = 6V
LOAD REG, READ REG, P1, P2	V_{IH}	Input High Voltage	3.5	V_{DD}	Volts	
	V_{IL}	Input Low Voltage	V_{SS}	0.8	Volts	
	I_L	Leakage Current		1	μA	V_{IN} = 6V
WRITE, Φ	V_{IH}	Input High Voltage	3.5	V_{DD}	Volts	
	V_{IL}	Input Low Voltage	V_{SS}	0.8	Volts	
	I_L	Leakage Current		1	μA	V_{IN} = 6V

NOTE: Positive current is defined as conventional current flowing into the pin referenced.

Table 2

AC CHARACTERISTICS

SYMBOL	PARAMETER	MIN	TYP	MAX	UNITS	NOTES
PΦ	Φ Clock Period	.5		10	μs	Note 1
PW1	Φ Pulse Width	180		PΦ −180	ns	t_r, t_f = 50ns typical
t_{d1}	Φ to WRITE ↑ Delay	0		250	ns	Note 1
t_{d2}	Φ to WRITE ↓ Delay	0		200	ns	Note 1
PW2	WRITE Pulse Width	P Φ−100		P Φ	ns	t_r, t_f = 50ns typical
t_1	WRITE ↓ to CYCLE REQ ↑	P Φ+100-t_{d2}		P Φ +300-t_{d2}	ns	Note 4
t_2	WRITE ↓ to ENABLE & DIRECTION ↑			450	ns	
t_3	MEM IDLE ↓ to ENABLE ↓			400	ns	
t_4	$\overline{\text{XFER REQ}}$ ↓ to MEM IDLE ↑ Set-up	200			ns	
t_5	MEM IDLE ↑ to ADDR Valid	50	200	300	ns	C_L = 500 pF
t_6	MEM IDLE ↓ to ADDR Hi-Z	30		250	ns	C_L = 500 pF
t_7	MEM IDLE ↑ to XFER & DWS ↑	50		300	ns	C_L = 50 pF
t_8	MEM IDLE ↓ to XFER & DWS ↓	50		300	ns	C_L = 50 pF
t_9	MEM IDLE ↑ to STROBE ↑	600		$\frac{3P\Phi}{2}$ + 100	ns	C_L = 50 pF
t_{10}	STROBE Pulse Width	200		$\frac{P\Phi}{2}$ + 30	ns	C_L = 50 pF
t_{11}	DB Input Set-up Time	300			ns	
t_{12}	WRITE ↓ to READ/LOAD REG ↑			600	ns	
t_{13}	READ REG ↑ to DB Valid	40		300	ns	C_L = 100 pF
t_{14}	WRITE ↓ to MEM IDLE ↑	2PΦ +50-t_{d2}		2PΦ+300-t_{d2}	ns	Short Cycle
t_{15}	WRITE ↓ to MEM IDLE ↓	4PΦ+50-t_{d2}		4PΦ+300-t_{d2}	ns	Short Cycle
t_{16}	XFER & DWS ↓ to CYCLE REQ ↑	0		400	ns	Note 3

Table 3

1. These specifications are those of Φ and WRITE as supplied by the MK 3850 CPU.
2. Input and Output capacitance is 3 to 5pF typical on all pins except V_{DD}, V_{GG}, and V_{SS}.
3. If the next Cycle Req ↑ initiates a new read, XFER ↓ can be used to clock DMA read data into the peripheral.
4. Cycle Req is output by the MK 3852 DMI to initiate a memory READ/WRITE cycle.

F8 Family

MK 3854 DMA DEVICE TIMING

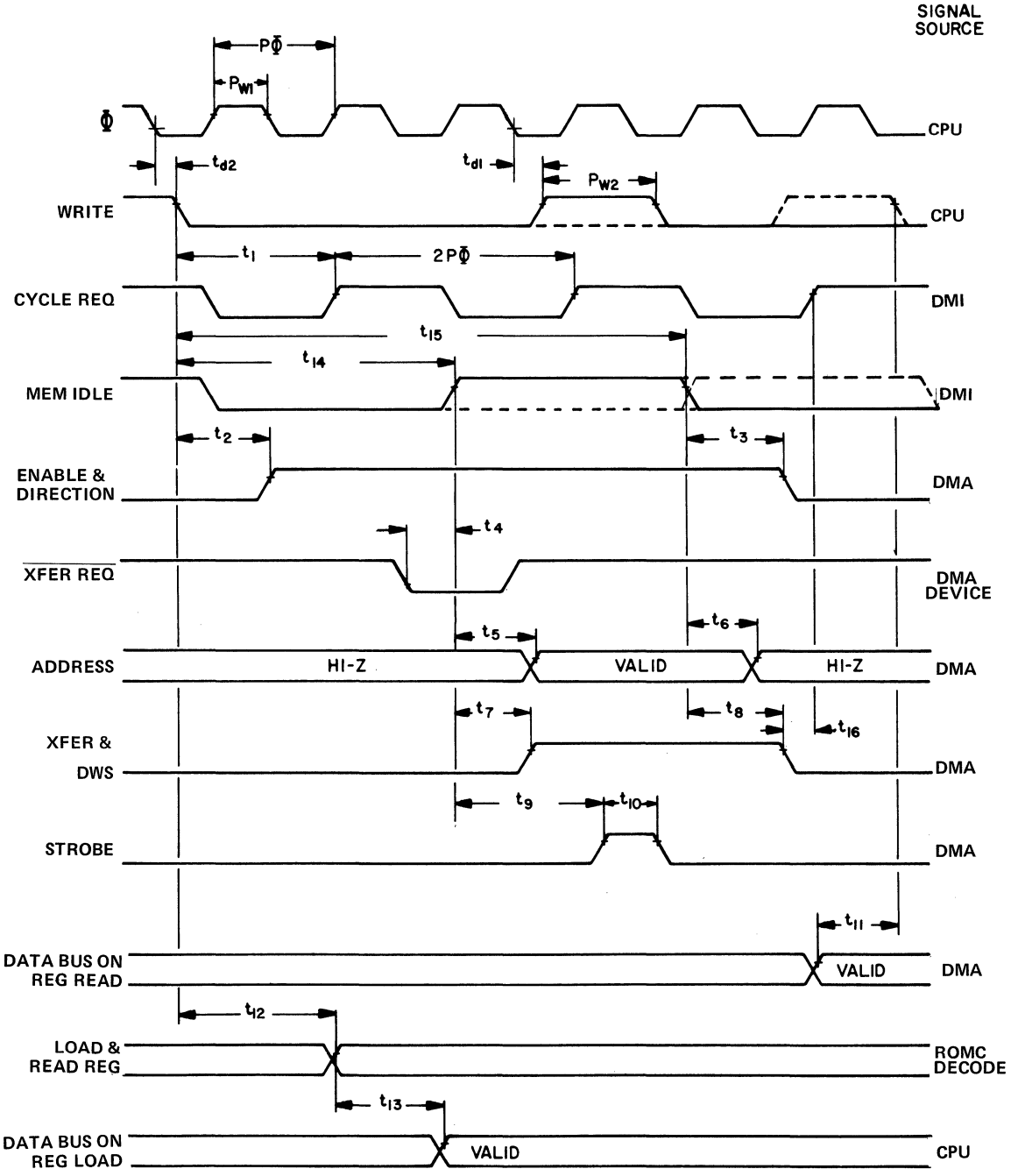

Figure 4

F8 Family

PACKAGE DESCRIPTION — 40-Pin Dual-in-Line Ceramic Package

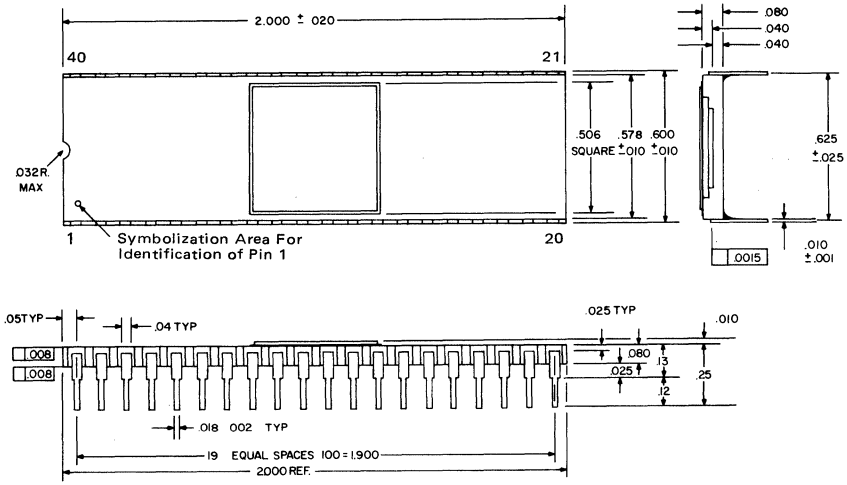

40-Pin Dual-in-Line Plastic Package

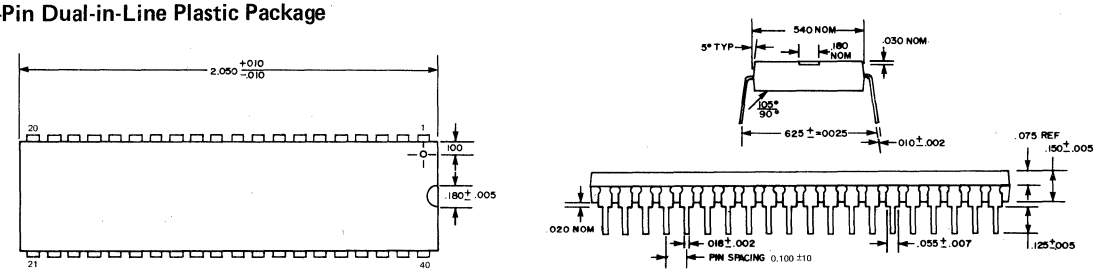

ORDERING INFORMATION

PART NUMBER	PACKAGE	TEMPERATURE RANGE
MK3854(N)	Plastic	0° C to +70° C
MK3854(P)	Ceramic	0° C to +70° C
MK3854(N)-10	Plastic	-40° C to +85° C
MK3854(P)-10	Ceramic	-40° C to +85° C

F8 Family