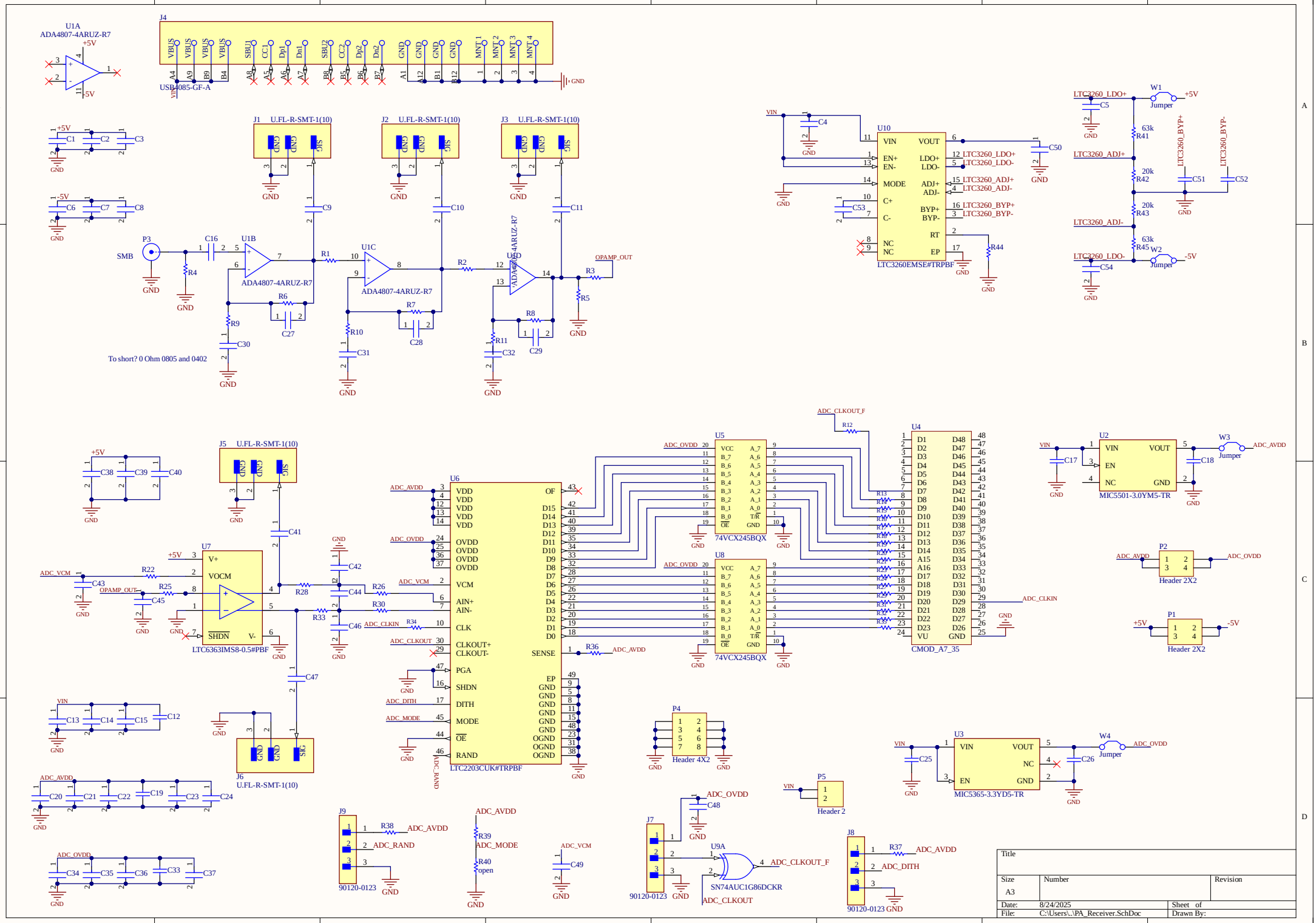
U1A
ADA4807-4ARUZ-R7
J4
USB4085-GF-A
J1 U.FL-R-SMT-1(10)
J2 U.FL-R-SMT-1(10)
J3 U.FL-R-SMT-1(10)
J5 U.FL-R-SMT-1(10)
J6 U.FL-R-SMT-1(10)
P3
SMB
U1B
U1C
U1D
ADA4807-4ARUZ-R7
OPAMP_OUT
To short? 0 Ohm 0805 and 0402
U10
LTC3260EMSE#TRPBF
LTC3260_LDO+
LTC3260_LDO-
LTC3260_ADJ+
LTC3260_ADJ-
LTC3260_BYP+
LTC3260_BYP-
W1
W2
Jumper
U7
LTC6363IMS8-0.5#PBF
U6
LTC2203CUK#TRPBF
U5
U8
74VCX245BQX
U4
CMOD_A7_35
ADC_CLKOUT_F
ADC_CLKIN
U2
MIC5501-3.0YM5-TR
W3
ADC_AVDD
P2
Header 2X2
P1
P4
Header 4X2
U3
MIC5365-3.3YD5-TR
W4
ADC_OVDD
P5
Header 2
J7
90120-0123
J8
90120-0123
J9
90120-0123
U9A
SN74AUC1G86DCKR
ADC_CLKOUT
ADC_RAND
ADC_MODE
ADC_DITH
ADC_VCM
GND
Title
Size
A3
Number
Revision
Date: 8/24/2025
Sheet of
File: C:\Users\..\PA_Receiver.SchDoc
Drawn By: