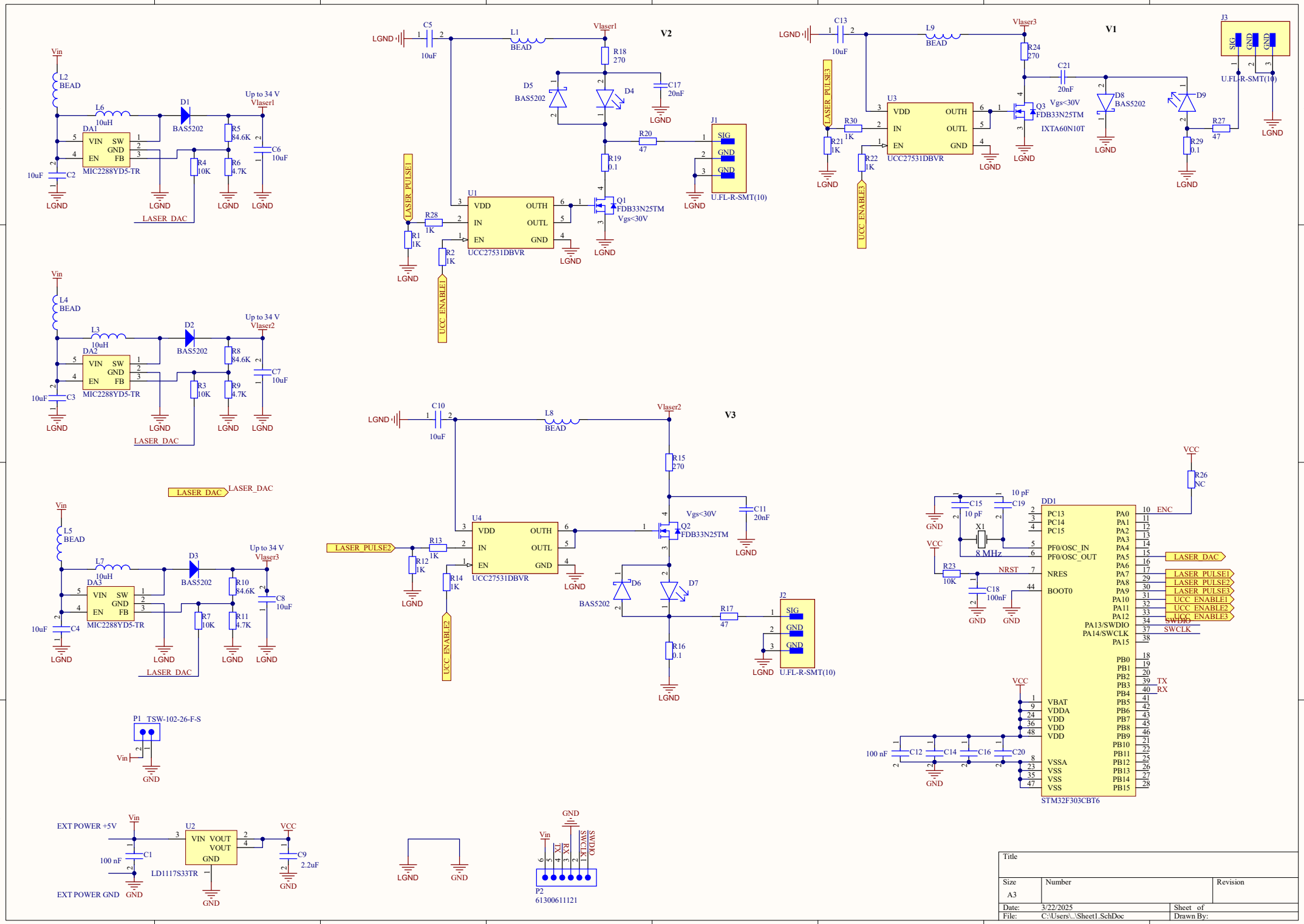
V2
V1
V3
Vin
L2 BEAD
L6 10uH
DA1
MIC2288YD5-TR
D1 BAS5202
Up to 34 V
Vlaser1
R5 84.6K
R6 4.7K
R4 10K
C6 10uF
C2 10uF
LASER_DAC
L4 BEAD
L3 10uH
DA2
D2 BAS5202
Vlaser2
R8 84.6K
R9 4.7K
R3 10K
C7 10uF
C3 10uF
L5 BEAD
L7 10uH
DA3
D3 BAS5202
Vlaser3
R10 84.6K
R11 4.7K
R7 10K
C8 10uF
C4 10uF
LASER_DAC
P1 TSW-102-26-F-S
EXT POWER +5V
EXT POWER GND
C1 100 nF
U2
VIN VOUT
GND
LD1117S33TR
VCC
C9 2.2uF
LGND
GND
C5 10uF
L1 BEAD
R18 270
D5 BAS5202
D4
C17 20nF
R20 47
J1
SIG
GND
U.FL-R-SMT(10)
R19 0.1
Q1 FDB33N25TM
Vgs<30V
U1
VDD OUTH
IN OUTL
EN GND
UCC27531DBVR
R28 1K
R1 1K
R2 1K
LASER_PULSE1
UCC_ENABLE1
C13 10uF
L9 BEAD
R24 270
C21 20nF
Q3 FDB33N25TM
IXTA60N10T
D8 BAS5202
D9
R27 47
R29 0.1
J3
U.FL-R-SMT(10)
U3
R30 1K
R21 1K
R22 1K
LASER_PULSE3
UCC_ENABLE3
C10 10uF
L8 BEAD
R15 270
C11 20nF
U4
R13 1K
R12 1K
R14 1K
LASER_PULSE2
UCC_ENABLE2
Q2 FDB33N25TM
D6 BAS5202
D7
R16 0.1
R17 47
J2
R26 NC
C15 10 pF
C19 10 pF
X1 8 MHz
R23 10K
C18 100nF
DD1
PC13 PC14 PC15
PF0/OSC_IN
PF0/OSC_OUT
NRES
BOOT0
PA0 PA1 PA2 PA3 PA4 PA5 PA6 PA7 PA8 PA9 PA10 PA11 PA12
PA13/SWDIO
PA14/SWCLK
PA15
PB0 PB1 PB2 PB3 PB4 PB5 PB6 PB7 PB8 PB9 PB10 PB11 PB12 PB13 PB14 PB15
VBAT VDDA VDD VDD VDD
VSSA VSS VSS VSS
ENC
NRST
SWDIO
SWCLK
TX
RX
STM32F303CBT6
C12 C14 C16 C20 100 nF
P2
61300611121
Title
Size A3
Number
Revision
Date: 3/22/2025
Sheet of
File: C:\Users\..\Sheet1.SchDoc
Drawn By: