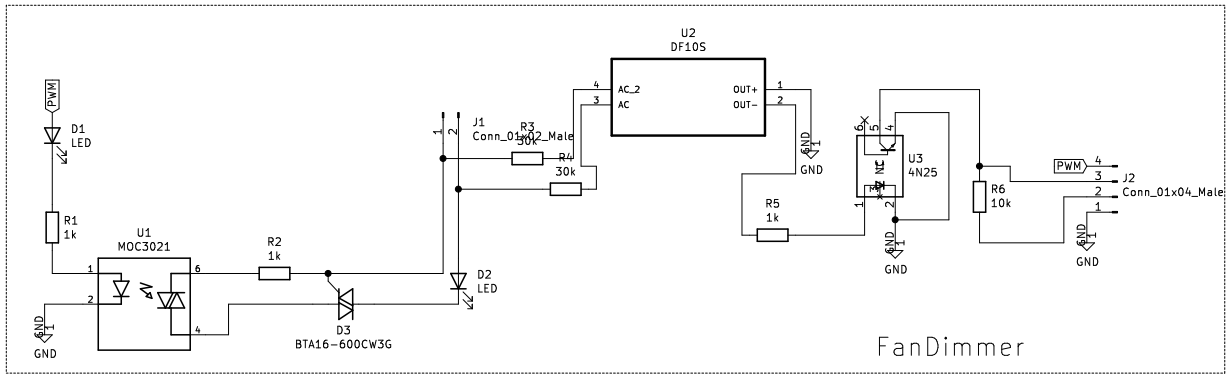

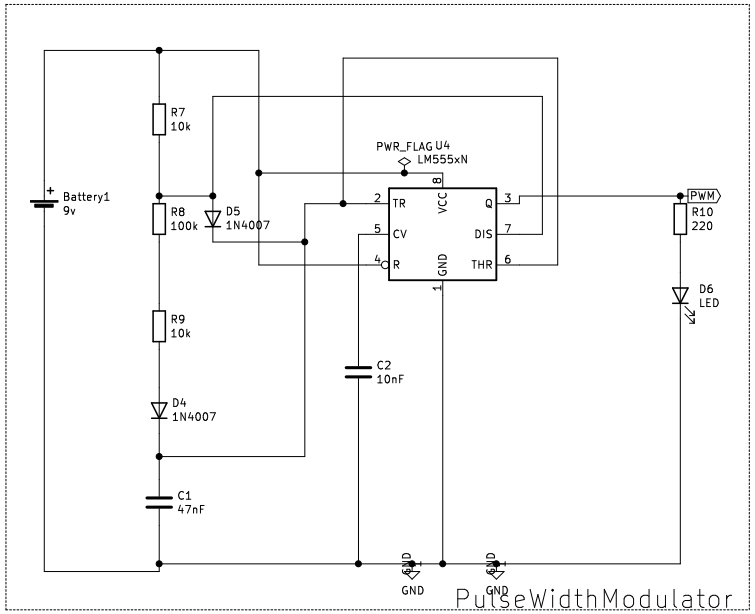

Pravallika Saladi, 119EC0013

Sheet: /

File: fan dimmer.sch

Title: FAN DIMMER

Size: User	Date:	**Rev:**
KiCad E.D.A. kicad (5.1.10)-1		Id: 1/1