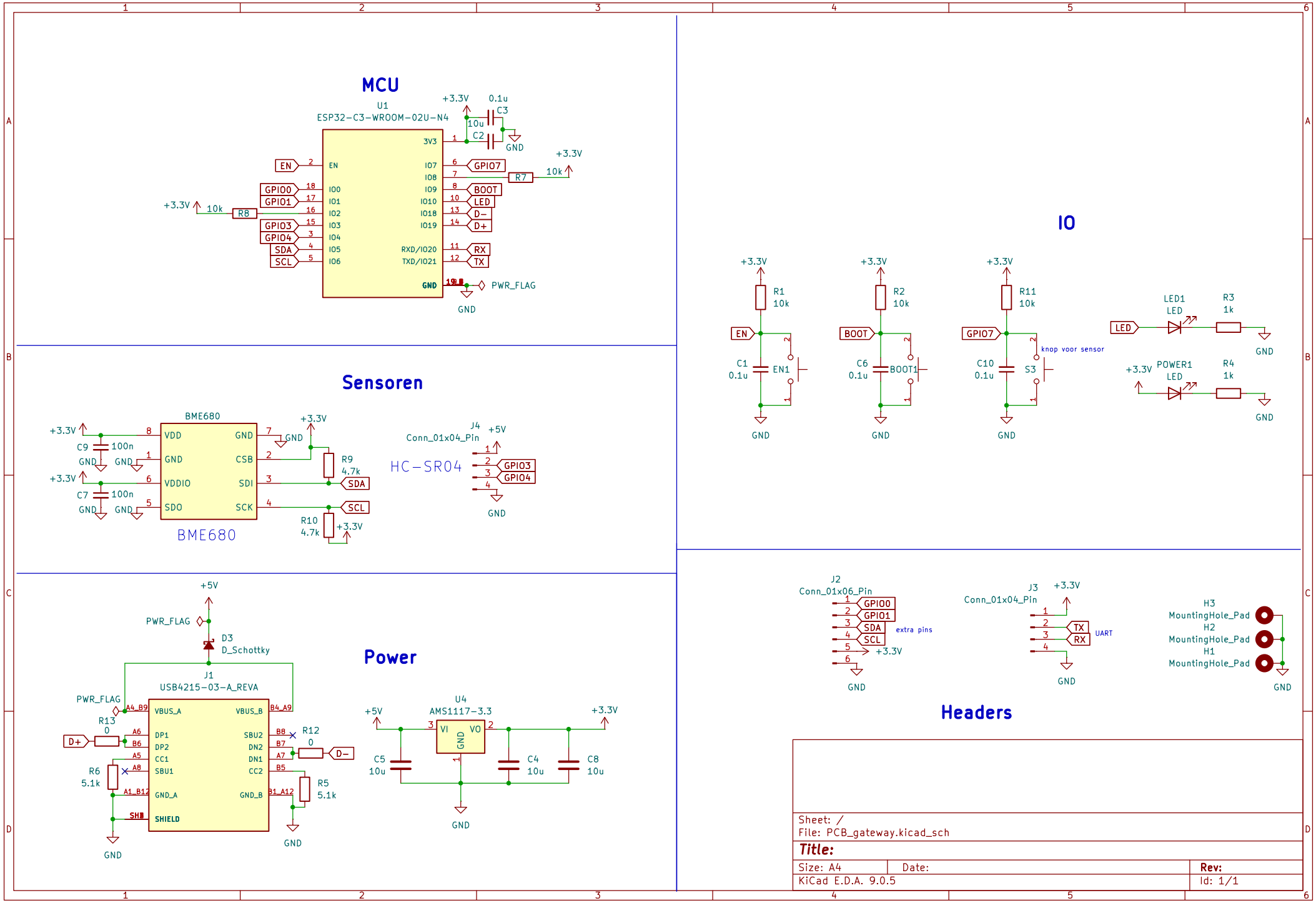
MCU
U1
ESP32-C3-WROOM-02U-N4
+3.3V
0.1u
C3
10u
C2
GND
3V3
EN
IO7
IO8
IO9
IO10
IO18
IO19
IO0
IO1
IO2
IO3
IO4
IO5
IO6
RXD/IO20
TXD/IO21
GND
GPIO7
R7
10k
BOOT
LED
D-
D+
RX
TX
PWR_FLAG
GPIO0
GPIO1
R8
GPIO3
GPIO4
SDA
SCL
Sensoren
BME680
VDD
GND
VDDIO
SDO
CSB
SDI
SCK
C9
100n
C7
R9
4.7k
R10
4.7k
HC-SR04
J4
Conn_01x04_Pin
+5V
Power
PWR_FLAG
D3
D_Schottky
J1
USB4215-03-A_REVA
VBUS_A
DP1
DP2
CC1
SBU1
GND_A
SHIELD
VBUS_B
SBU2
DN2
DN1
CC2
GND_B
A4_B9
B4_A9
A6
B6
A5
A8
A1_B12
B8
B7
A7
B5
B1_A12
R13
0
R12
0
R6
5.1k
R5
5.1k
U4
AMS1117-3.3
VI
VO
C5
10u
C4
10u
C8
10u
IO
R1
10k
R2
10k
R11
10k
C1
0.1u
C6
0.1u
C10
0.1u
EN1
BOOT1
S3
knop voor sensor
LED1
LED
R3
1k
POWER1
R4
1k
Headers
J2
Conn_01x06_Pin
extra pins
J3
Conn_01x04_Pin
TX
RX
UART
H3
MountingHole_Pad
H2
H1
Sheet: /
File: PCB_gateway.kicad_sch
Title:
Size: A4
Date:
Rev:
KiCad E.D.A. 9.0.5
Id: 1/1