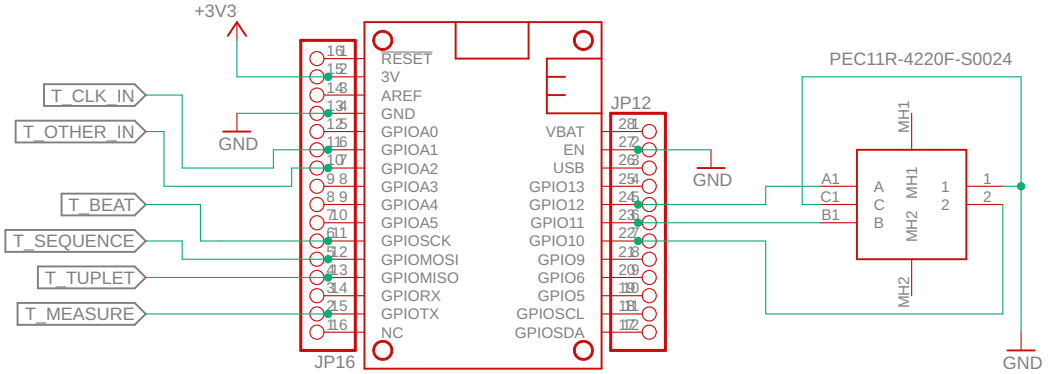

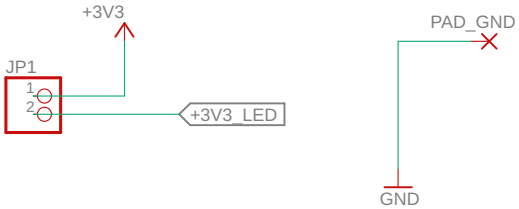

Outputs

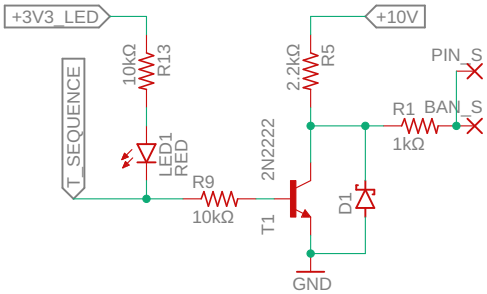

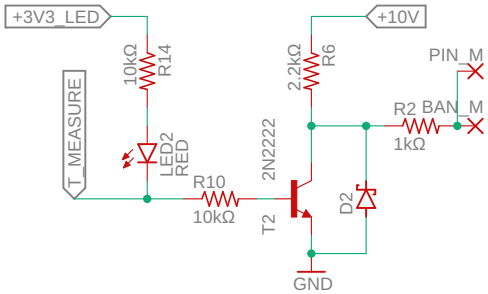

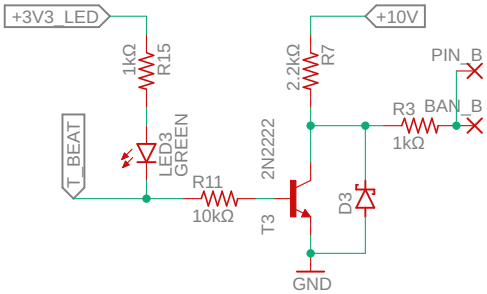

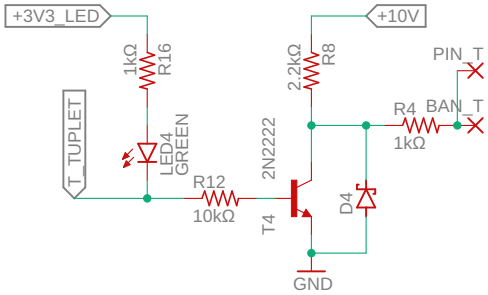

Inputs

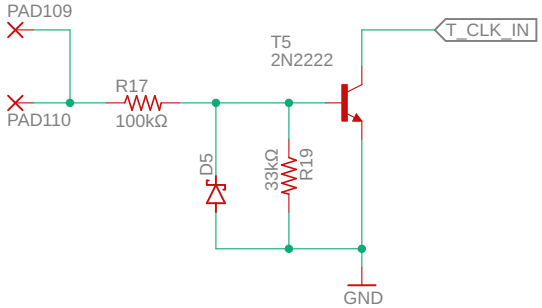

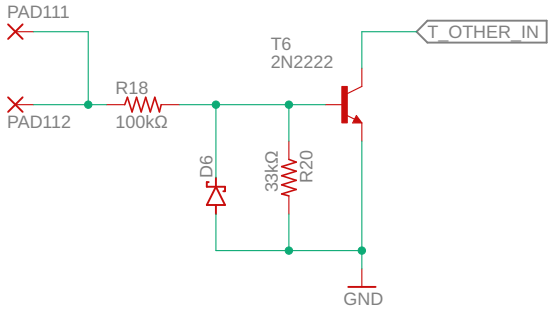

Power

PTC resettable fuse such as:
Bournes MF-R020
Bel Fuse 0ZRR0020FF1E

Either:
A - UA78M33 linear regulator
B - VXO7803-500 switching regulator

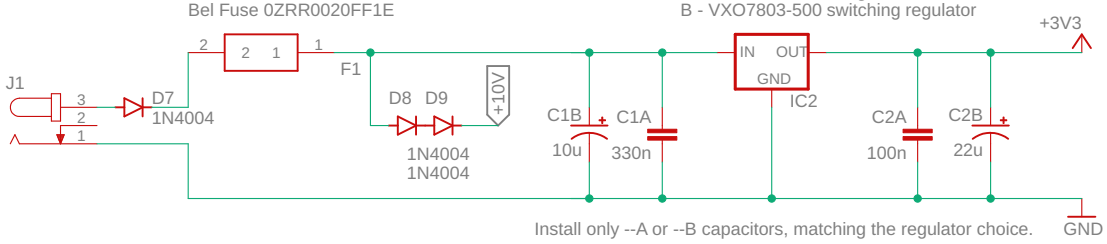

Install only --A or --B capacitors, matching the regulator choice.

TITLE: Pulsar Buddy	
Document Number:	REV:
Date: 1/30/20 11:29 PM	Sheet: 1/1