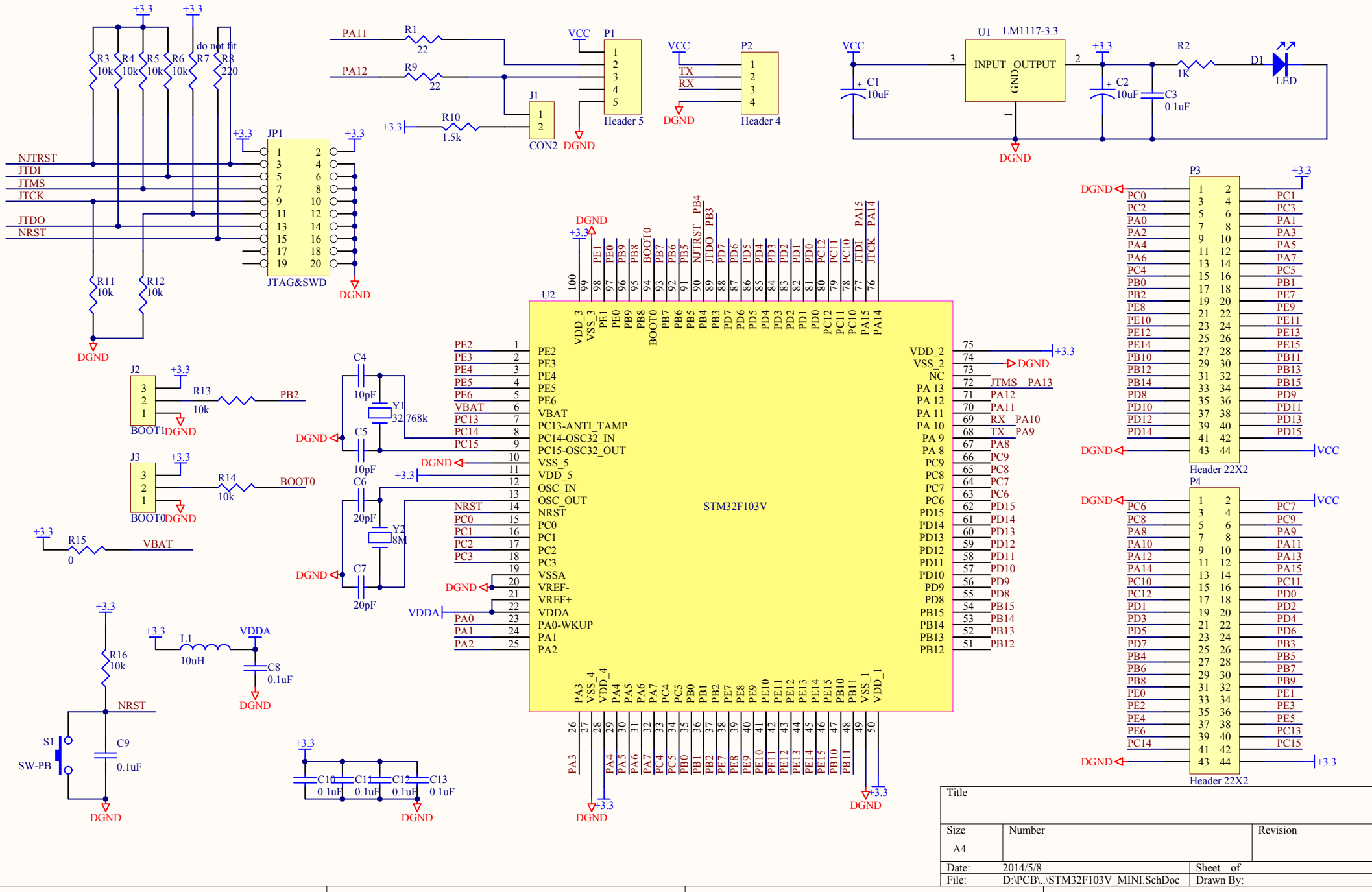
U2
STM32F103V
JTAG&SWD
CON2
Header 5
Header 4
Header 22X2
Header 22X2
LM1117-3.3
INPUT
OUTPUT
GND
LED
BOOT1
BOOT0
SW-PB
Title
Size
A4
Number
Revision
Date: 2014/5/8
File: D:\PCB\..\STM32F103V_MINI.SchDoc
Sheet of
Drawn By:

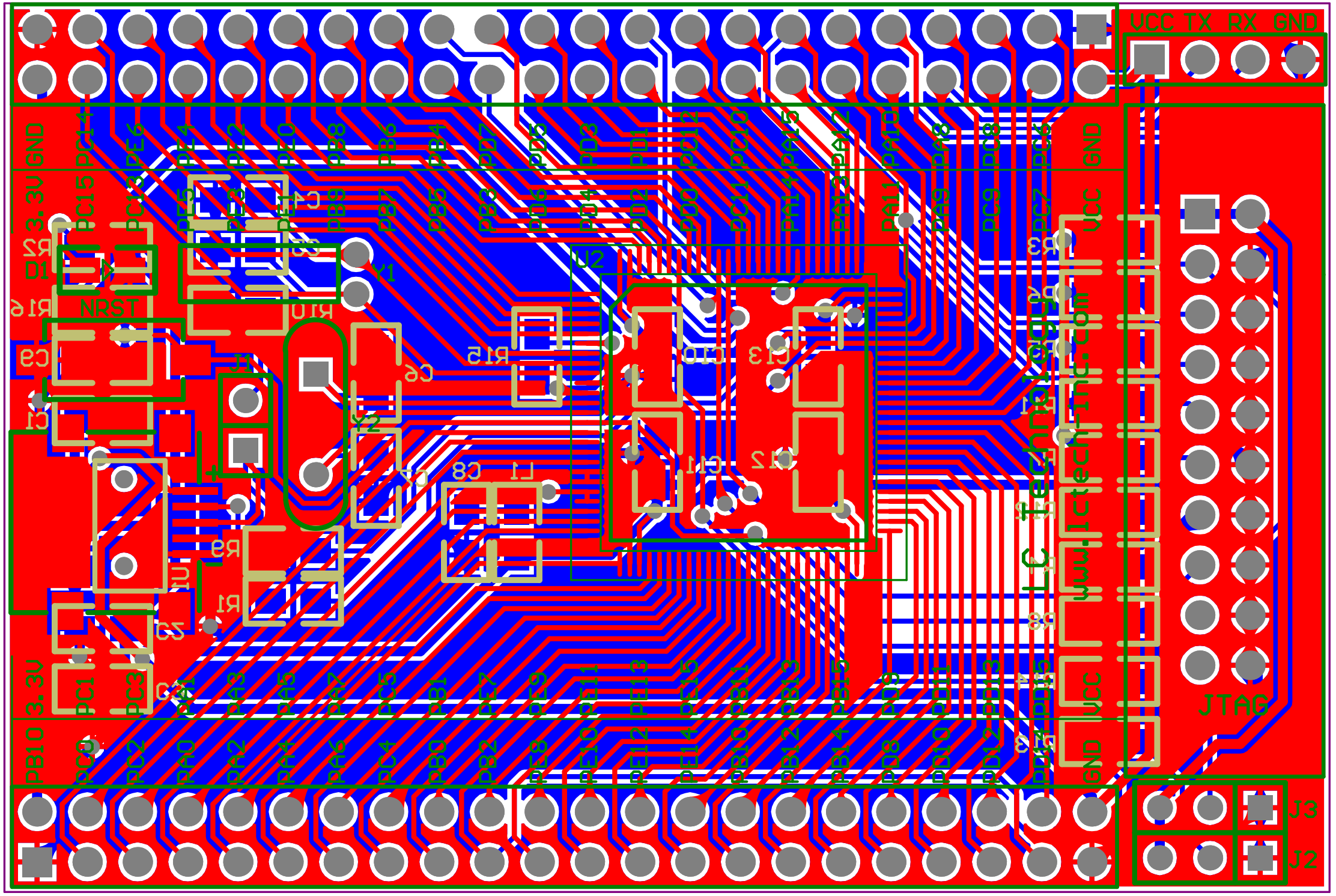
VCC TX RX GND
JTAG
J3
J2
www.ictechnics.com
NRST
U2
Y1
Y2
GND
VCC
3.3V

Comment	Description	Designator	Footprint	LibRef	Quantity
10uF	Capacitor	C1, C2	0805	CAPACITOR POL	2
0.1uF	Capacitor	C3, C8, C9, C10, C11, C12, C13	0805	CAP	7
10pF	Capacitor	C4, C5	0805	CAP	2
20pF	Capacitor	C6, C7	0805	CAP	2
LED		D1	LED0805	LED	1
CON2	Connector	J1	SIP2	CON2	1
BOOT1	Connector	J2	SIP3	CON3	1
BOOT0	Connector	J3	SIP3	CON3	1
JTAG&SWD		JP1	IDC20	HEADER 10X2	1
10uH		L1	0805	INDUCTOR1	1
Header 5	Header, 5-Pin	P1	USB-SOCKET-T	Header 5	1
Header 4	Header, 4-Pin	P2	HDR1X4	Header 4	1
Header 22X2	Header, 22-Pin, Dual row	P3, P4	HDR2X22	Header 22X2	2
22		R1, R9	0805	RES1	2
1K		R2	0805	RES1	1
10k		R3, R4, R5, R6, R11, R12, R13, R14, R16	0805	RES1	9
do not fit		R7	0805	RES1	1
220		R8	0805	RES1	1
1.5k		R10	0805	RES1	1
0		R15	0805	RES1	1
SW-PB		S1	Key	SW-PB	1
LM1117-3.3		U1	LM1117	LM1117	1
STM32F103V		U2	TQFP-100	STM32F103V	1
32.768k	Crystal	Y1	32.768k	CRYSTAL	1
8M	Crystal	Y2	XTAL	CRYSTAL	1