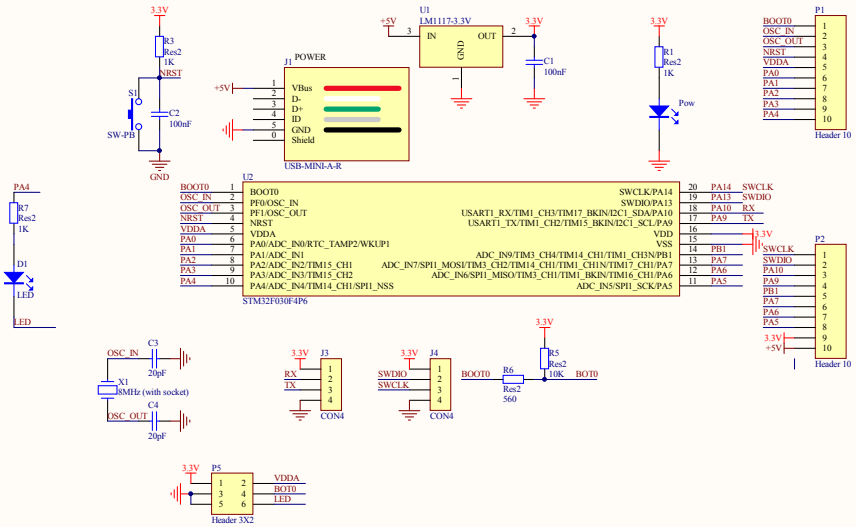

Title		
Size C	Number	Revision
Date: 2016-6-16		Sheet of
File: Z:\1	\\stm32f030f4p6v200.SchDoc	

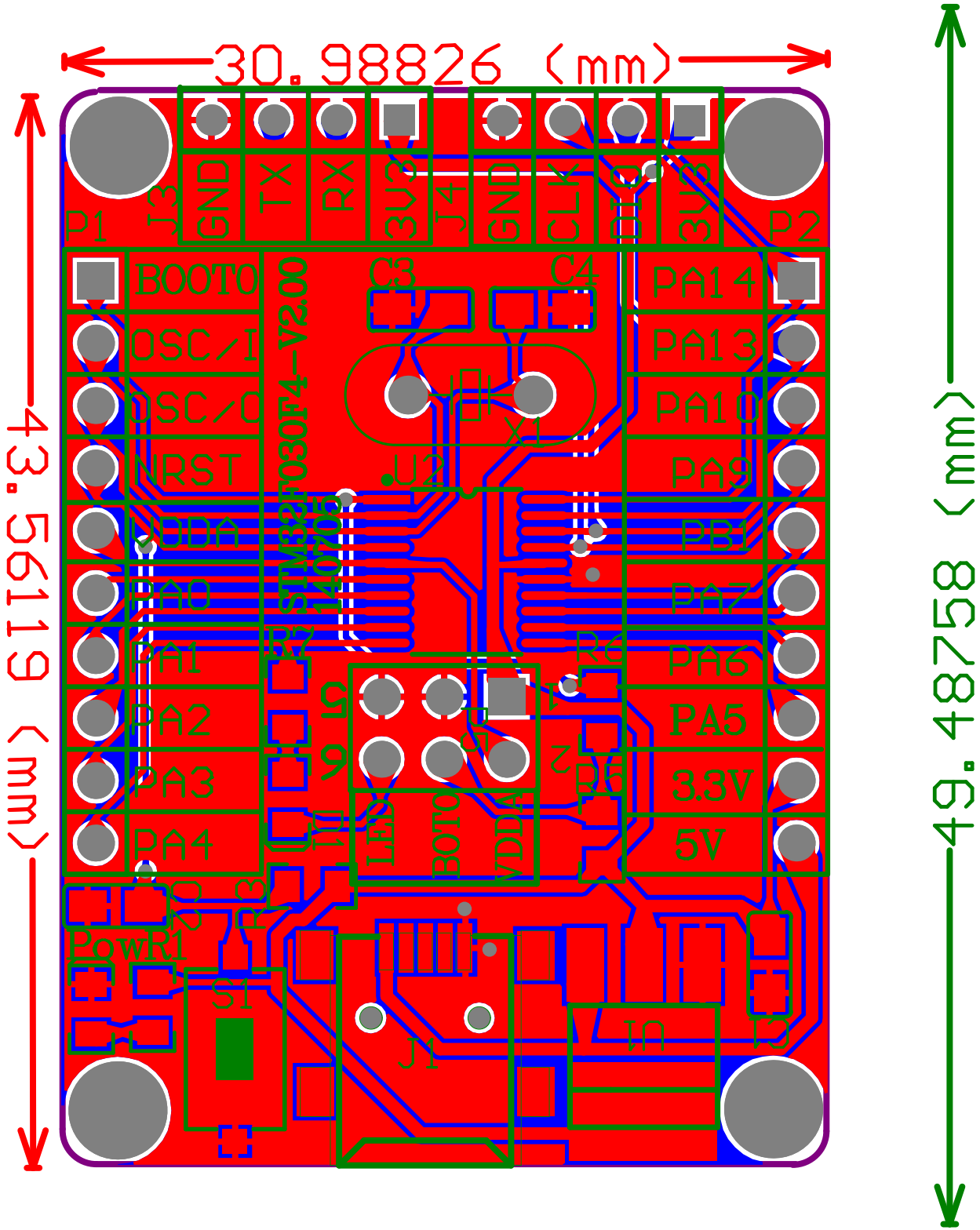
30.98826 (mm)
43.56119 (mm)
49.48758 (mm)
P1
P2
J3
GND
TX
RX
3V3
J4
GND
CLK
DIO
3V3
BOOT0
OSC/I
OSC/O
NRST
SDA
PA0
PA1
PA2
PA3
PA4
PA14
PA13
PA10
PA9
PB
PA7
PA6
PA5
3.3V
5V
STM32F030F4-V2.00
C3
C4
X1
U2
R7
R6
R5
R2
R1
C5
C6
C7
C8
C9
C10
C11
C12
C13
C14
C15
C16
C17
C18
C19
C20
C21
C22
C23
C24
C25
C26
C27
C28
C29
C30
C31
C32
C33
C34
C35
C36
C37
C38
C39
C40
C41
C42
C43
C44

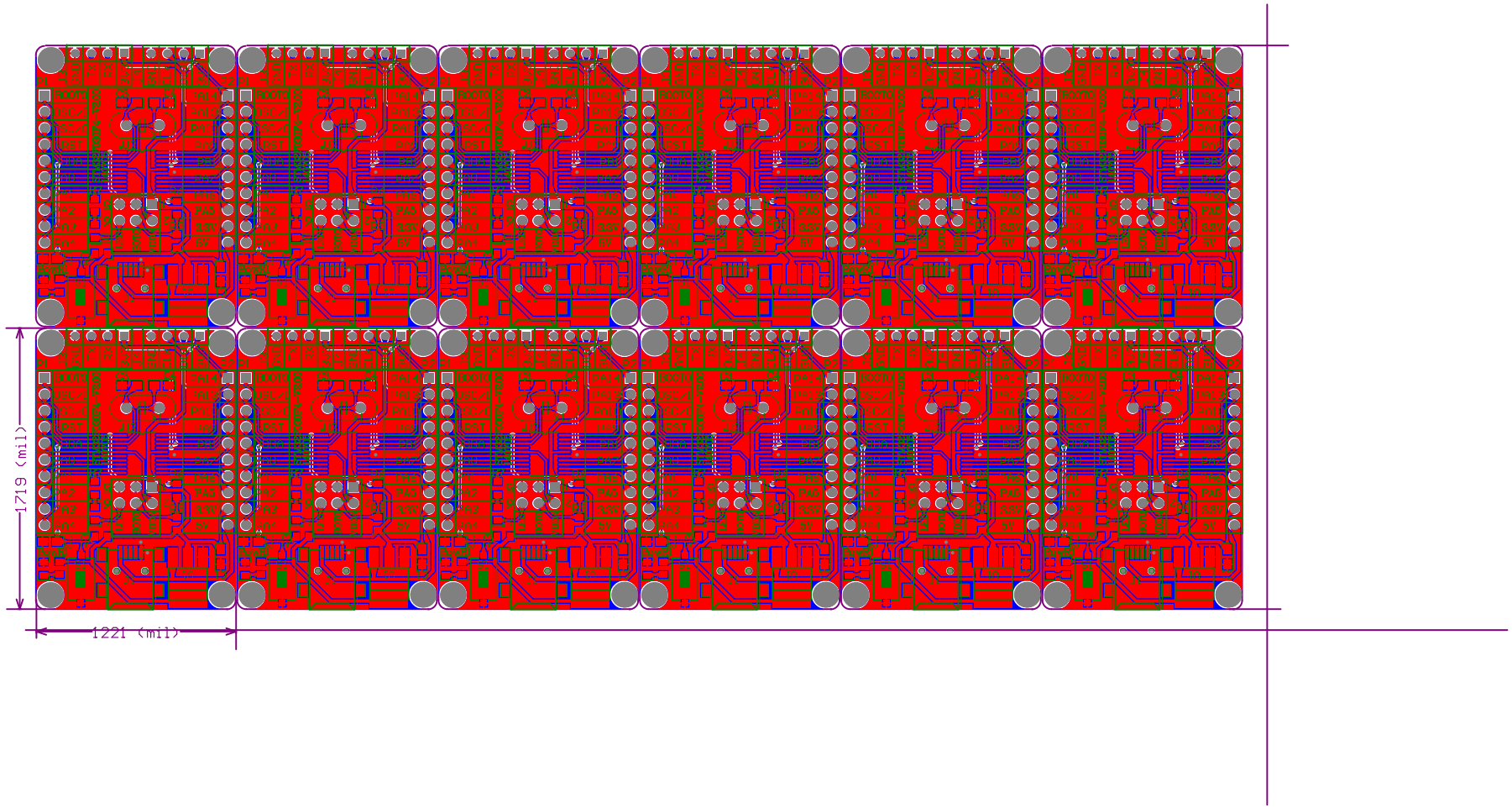
1719 (mil)
1221 (mil)

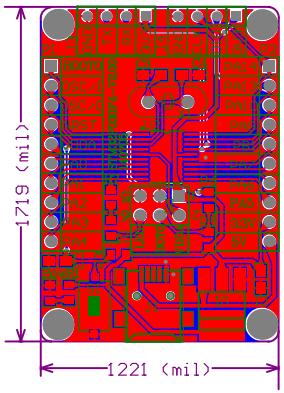
1719 (mil)
1221 (mil)

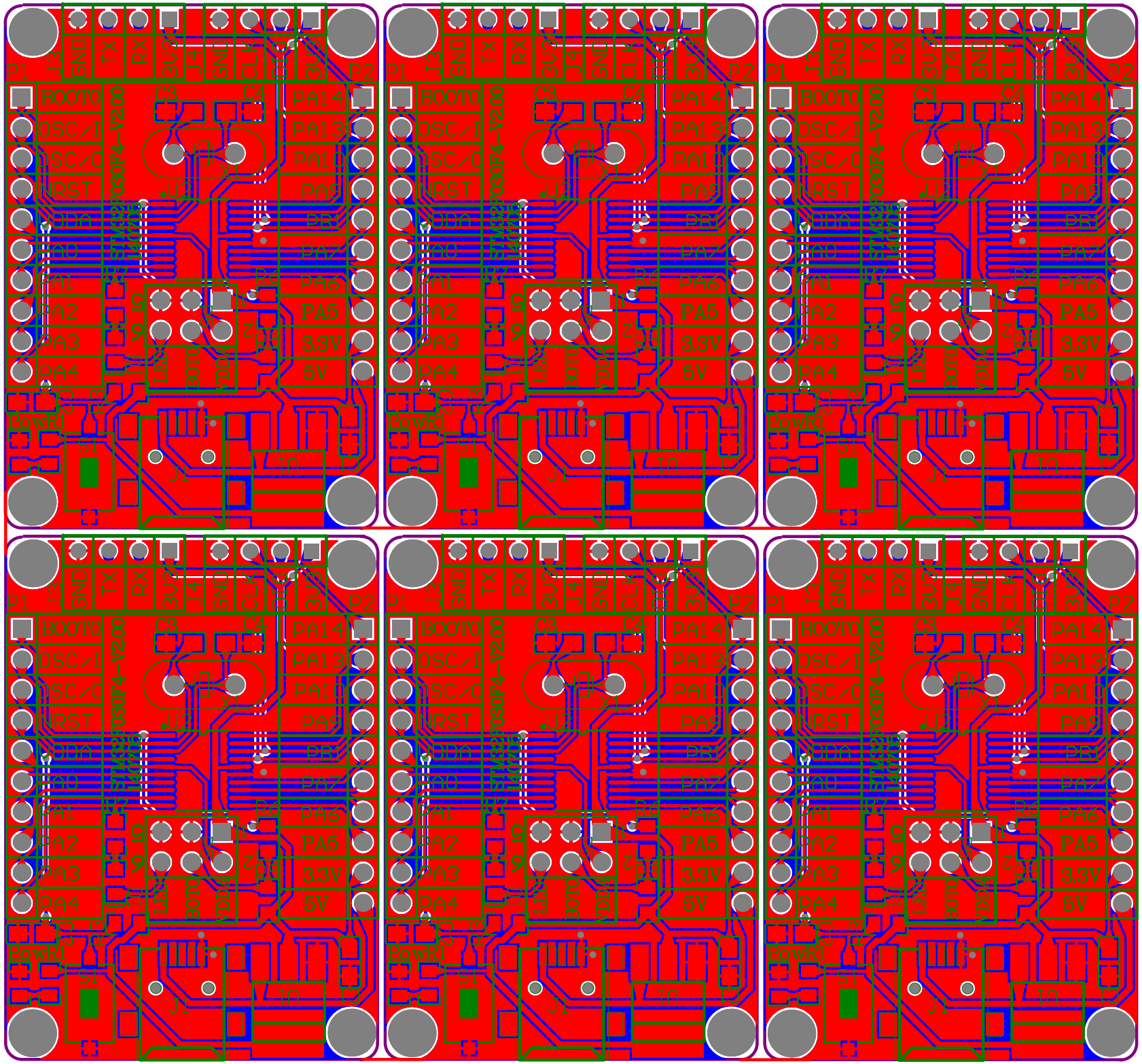
P1
P2
GND
TX
RX
3.3V
GND
GND
BOOT0
OSC/I
OSC/O
NRST
PA14
PA13
PA1
PA9
PA2
PA3
PA4
PA5
3.3V
5V
PowR1
C3
C4
C5
C6
C9
J1
J2
J3
J4
J5
J6
J7
J8
J9
J10
J11
J12
J13
J14
J15
J16
J17
J18
J19
J20
J21
J22
J23
J24
J25
J26
J27
J28
J29
J30
J31
J32
J33
J34
J35
J36
J37
J38
J39
J40
J41
J42
J43
J44
J45
J46
J47
J48
J49
J50
J51
J52
J53
J54
J55
J56
J57
J58
J59
J60
J61
J62
J63
J64
J65
J66
J67
J68
J69
J70
J71
J72
J73
J74
J75
J76
J77
J78
J79
J80
J81
J82
J83
J84
J85
J86
J87
J88
J89
J90
J91
J92
J93
J94
J95
J96
J97
J98
J99
J100
J101
J102
J103
J104
J105
J106
J107
J108
J109
J110
J111
J112
J113
J114
J115
J116
J117
J118
J119
J120
J121
J122
J123
J124
J125
J126
J127
J128
J129
J130
J131
J132
J133
J134
J135
J136
J137
J138
J139
J140
J141
J142
J143
J144
J145
J146
J147
J148
J149
J150
J151
J152
J153
J154
J155
J156
J157
J158
J159
J160
J161
J162
J163
J164
J165
J166
J167
J168
J169
J170
J171
J172
J173
J174
J175
J176
J177
J178
J179
J180
J181
J182
J183
J184
J185
J186
J187
J188
J189
J190
J191
J192
J193
J194
J195
J196
J197
J198
J199
J200
J201
J202
J203
J204
J205
J206
J207
J208
J209
J210
J211
J212
J213
J214
J215
J216
J217
J218
J219
J220
J221
J222
J223
J224
J225
J226
J227
J228
J229
J230
J231
J232
J233
J234
J235
J236
J237
J238
J239
J240
J241
J242
J243
J244
J245
J246
J247
J248
J249
J250
J251
J252
J253
J254
J255
J256
J257
J258
J259
J260
J261
J262
J263
J264
J265
J266
J267
J268
J269
J270
J271
J272
J273
J274
J275
J276
J277
J278
J279
J280
J281
J282
J283
J284
J285
J286
J287
J288
J289
J290
J291
J292
J293
J294
J295
J296
J297
J298
J299
J300
J301
J302
J303
J304
J305
J306
J307
J308
J309
J310
J311
J312
J313
J314
J315
J316
J317
J318
J319
J320
J321
J322
J323
J324
J325
J326
J327
J328
J329
J330
J331
J332
J333
J334
J335
J336
J337
J338
J339
J340
J341
J342
J343
J344
J345
J346
J347
J348
J349
J350
J351
J352
J353
J354
J355
J356
J357
J358
J359
J360
J361
J362
J363
J364
J365
J366
J367
J368
J369
J370
J371
J372
J373
J374
J375
J376
J377
J378
J379
J380
J381
J382
J383
J384
J385
J386
J387
J388
J389
J390
J391
J392
J393
J394
J395
J396
J397
J398
J399
J400
J401
J402
J403
J404
J405
J406
J407
J408
J409
J410
J411
J412
J413
J414
J415
J416
J417
J418
J419
J420
J421
J422
J423
J424
J425
J426
J427
J428
J429
J430
J431
J432
J433
J434
J435
J436
J437
J438
J439
J440
J441
J442
J443
J444
J445
J446
J447
J448
J449
J450
J451
J452
J453
J454
J455
J456
J457
J458
J459
J460
J461
J462
J463
J464
J465
J466
J467
J468
J469
J470
J471
J472
J473
J474
J475
J476
J477
J478
J479
J480
J481
J482
J483
J484
J485
J486
J487
J488
J489
J490
J491
J492
J493
J494
J495
J496
J497
J498
J499
J500
J501
J502
J503
J504
J505
J506
J507
J508
J509
J510
J511
J512
J513
J514
J515
J516
J517
J518
J519
J520
J521
J522
J523
J524
J525
J526
J527
J528
J529
J530
J531
J532
J533
J534
J535
J536
J537
J538
J539
J540
J541
J542
J543
J544
J545
J546
J547
J548
J549
J550
J551
J552
J553
J554
J555
J556
J557
J558
J559
J560
J561
J562
J563
J564
J565
J566
J567
J568
J569
J570
J571
J572
J573
J574
J575
J576
J577
J578
J579
J580
J581
J582
J583
J584
J585
J586
J587
J588
J589
J590
J591
J592
J593
J594
J595
J596
J597
J598
J599
J600
J601
J602
J603
J604
J605
J606
J607
J608
J609
J610
J611
J612
J613
J614
J615
J616
J617
J618
J619
J620
J621
J622
J623
J624
J625
J626
J627
J628
J629
J630
J631
J632
J633
J634
J635
J636
J637
J638
J639
J640
J641
J642
J643
J644
J645
J646
J647
J648
J649
J650
J651
J652
J653
J654
J655
J656
J657
J658
J659
J660
J661
J662
J663
J664
J665
J666
J667
J668
J669
J670
J671
J672
J673
J674
J675
J676
J677
J678
J679
J680
J681
J682
J683
J684
J685
J686
J687
J688
J689
J690
J691
J692
J693
J694
J695
J696
J697
J698
J699
J700
J701
J702
J703
J704
J705
J706
J707
J708
J709
J710
J711
J712
J713
J714
J715
J716
J717
J718
J719
J720
J721
J722
J723
J724
J725
J726
J727
J728
J729
J730
J731
J732
J733
J734
J735
J736
J737
J738
J739
J740
J741
J742
J743
J744
J745
J746
J747
J748
J749
J750
J751
J752
J753
J754
J755
J756
J757
J758
J759
J760
J761
J762
J763
J764
J765
J766
J767
J768
J769
J770
J771
J772
J773
J774
J775
J776
J777
J778
J779
J780
J781
J782
J783
J784
J785
J786
J787
J788
J789
J790
J791
J792
J793
J794
J795
J796
J797
J798
J799
J800
J801
J802
J803
J804
J805
J806
J807
J808
J809
J810
J811
J812
J813
J814
J815
J816
J817
J818
J819
J820
J821
J822
J823
J824
J825
J826
J827
J828
J829
J830
J831
J832
J833
J834
J835
J836
J837
J838
J839
J840
J841
J842
J843
J844
J845
J846
J847
J848
J849
J850
J851
J852
J853
J854
J855
J856
J857
J858
J859
J860
J861
J862
J863
J864
J865
J866
J867
J868
J869
J870
J871
J872
J873
J874
J875
J876
J877
J878
J879
J880
J881
J882
J883
J884
J885
J886
J887
J888
J889
J890
J891
J892
J893
J894
J895
J896
J897
J898
J899
J900
J901
J902
J903
J904
J905
J906
J907
J908
J909
J910
J911
J912
J913
J914
J915
J916
J917
J918
J919
J920
J921
J922
J923
J924
J925
J926
J927
J928
J929
J930
J931
J932
J933
J934
J935
J936
J937
J938
J939
J940
J941
J942
J943
J944
J945
J946
J947
J948
J949
J950
J951
J952
J953
J954
J955
J956
J957
J958
J959
J960
J961
J962
J963
J964
J965
J966
J967
J968
J969
J970
J971
J972
J973
J974
J975
J976
J977
J978
J979
J980
J981
J982
J983
J984
J985
J986
J987
J988
J989
J990
J991
J992
J993
J994
J995
J996
J997
J998
J999
J1000
U1
U2
U3
U4
U5
U6
U7
U8
U9
U10
U11
U12
U13
U14
U15
U16
U17
U18
U19
U20
U21
U22
U23
U24
U25
U26
U27
U28
U29
U30
U31
U32
U33
U34
U35
U36
U37
U38
U39
U40
U41
U42
U43
U44
U45
U46
U47
U48
U49
U50
U51
U52
U53
U54
U55
U56
U57
U58
U59
U60
U61
U62
U63
U64
U65
U66
U67
U68
U69
U70
U71
U72
U73
U74
U75
U76
U77
U78
U79
U80
U81
U82
U83
U84
U85
U86
U87
U88
U89
U90
U91
U92
U93
U94
U95
U96
U97
U98
U99
U100
U101
U102
U103
U104
U105
U106
U107
U108
U109
U110
U111
U112
U113
U114
U115
U116
U117
U118
U119
U120
U121
U122
U123
U124
U125
U126
U127
U128
U129
U130
U131
U132
U133
U134
U135
U136
U137
U138
U139
U140
U141
U142
U143
U144
U145
U146
U147
U148
U149
U150
U151
U152
U153
U154
U155
U156
U157
U158
U159
U160
U161
U162
U163
U164
U165
U166
U167
U168
U169
U170
U171
U172
U173
U174
U175
U176
U177
U178
U179
U180
U181
U182
U183
U184
U185
U186
U187
U188
U189
U190
U191
U192
U193
U194
U195
U196
U197
U198
U199
U200
U201
U202
U203
U204
U205
U206
U207
U208
U209
U210
U211
U212
U213
U214
U215
U216
U217
U218
U219
U220
U221
U222
U223
U224
U225
U226
U227
U228
U229
U230
U231
U232
U233
U234
U235
U236
U237
U238
U239
U240
U241
U242
U243
U244
U245
U246
U247
U248
U249
U250
U251
U252
U253
U254
U255
U256
U257
U258
U259
U260
U261
U262
U263
U264
U265
U266
U267
U268
U269
U270
U271
U272
U273
U274
U275
U276
U277
U278
U279
U280
U281
U282
U283
U284
U285
U286
U287
U288
U289
U290
U291
U292
U293
U294
U295
U296
U297
U298
U299
U300
U301
U302
U303
U304
U305
U306
U307
U308
U309
U310
U311
U312
U313
U314
U315
U316
U317
U318
U319
U320
U321
U322
U323
U324
U325
U326
U327
U328
U329
U330
U331
U332
U333
U334
U335
U336
U337
U338
U339
U340
U341
U342
U343
U344
U345
U346
U347
U348
U349
U350
U351
U352
U353
U354
U355
U356
U357
U358
U359
U360
U361
U362
U363
U364
U365
U366
U367
U368
U369
U370
U371
U372
U373
U374
U375
U376
U377
U378
U379
U380
U381
U382
U383
U384
U385
U386
U387
U388
U389
U390
U391
U392
U393
U394
U395
U396
U397
U398
U399
U400
U401
U402
U403
U404
U405
U406
U407
U408
U409
U410
U411
U412
U413
U414
U415
U416
U417
U418
U419
U420
U421
U422
U423
U424
U425
U426
U427
U428
U429
U430
U431
U432
U433
U434
U435
U436
U437
U438
U439
U440
U441
U442
U443
U444
U445
U446
U447
U448
U449
U450
U451
U452
U453
U454
U455
U456
U457
U458
U459
U460
U461
U462
U463
U464
U465
U466
U467
U468
U469
U470
U471
U472
U473
U474
U475
U476
U477
U478
U479
U480
U481
U482
U483
U484
U485
U486
U487
U488
U489
U490
U491
U492
U493
U494
U495
U496
U497
U498
U499
U500
U501
U502
U503
U504
U505
U506
U507
U508
U509
U510
U511
U512
U513
U514
U515
U516
U517
U518
U519
U520
U521
U522
U523
U524
U525
U526
U527
U528
U529
U530
U531
U532
U533
U534
U535
U536
U537
U538
U539
U540
U541
U542
U543
U544
U545
U546
U547
U548
U549
U550
U551
U552
U553
U554
U555
U556
U557
U558
U559
U560
U561
U562
U563
U564
U565
U566
U567
U568
U569
U570
U571
U572
U573
U574
U575
U576
U577
U578
U579
U580
U581
U582
U583
U584
U585
U586
U587
U588
U589
U590
U591
U592
U593
U594
U595
U596
U597
U598
U599
U600
U601
U602
U603
U604
U605
U606
U607
U608
U609
U610
U611
U612
U613
U614
U615
U616
U617
U618
U619
U620
U621
U622
U623
U624
U625
U626
U627
U628
U629
U630
U631
U632
U633
U634
U635
U636
U637
U638
U639
U640
U641
U642
U643
U644
U645
U646
U647
U648
U649
U650
U651
U652
U653
U654
U655
U656
U657
U658
U659
U660
U661
U662
U663
U664
U665
U666
U667
U668
U669
U670
U671
U672
U673
U674
U675
U676
U677
U678
U679
U680
U681
U682
U683
U684
U685
U686
U687
U688
U689
U690
U691
U692
U693
U694
U695
U696
U697
U698
U699
U700
U701
U702
U703
U704
U705
U706
U707
U708
U709
U710
U711
U712
U713
U714
U715
U716
U717
U718
U719
U720
U721
U722
U723
U724
U725
U726
U727
U728
U729
U730
U731
U732
U733
U734
U735
U736
U737
U738
U739
U740
U741
U742
U743
U744
U745
U746
U747
U748
U749
U750
U751
U752
U753
U754
U755
U756
U757
U758
U759
U760
U761
U762
U763
U764
U765
U766
U767
U768
U769
U770
U771
U772
U773
U774
U775
U776
U777
U778
U779
U780
U781
U782
U783
U784
U785
U786
U787
U788
U789
U790
U791
U792
U793
U794
U795
U796
U797
U798
U799
U800
U801
U802
U803
U804
U805
U806
U807
U808
U809
U810
U811
U812
U813
U814
U815
U816
U817
U818
U819
U820
U821
U822
U823
U824
U825
U826
U827
U828
U829
U830
U831
U832
U833
U834
U835
U836
U837
U838
U839
U840
U841
U842
U843
U844
U845
U846
U847
U848
U849
U850
U851
U852
U853
U854
U855
U856
U857
U858
U859
U860
U861
U862
U863
U864
U865
U866
U867
U868
U869
U870
U871
U872
U873
U874
U875
U876
U877
U878
U879
U880
U881
U882
U883
U884
U885
U886
U887
U888
U889
U890
U891
U892
U893
U894
U895
U896
U897
U898
U899
U900
U901
U902
U903
U904
U905
U906
U907
U908
U909
U910
U911
U912
U913
U914
U915
U916
U917
U918
U919
U920
U921
U922
U923
U924
U925
U926
U927
U928
U929
U930
U931
U932
U933
U934
U935
U936
U937
U938
U939
U940
U941
U942
U943
U944
U945
U946
U947
U948
U949
U950
U951
U952
U953
U954
U955
U956
U957
U958
U959
U960
U961
U962
U963
U964
U965
U966
U967
U968
U969
U970
U971
U972
U973
U974
U975
U976
U977
U978
U979
U980
U981
U982
U983
U984
U985
U986
U987
U988
U989
U990
U991
U992
U993
U994
U995
U996
U997
U998
U999
U1000