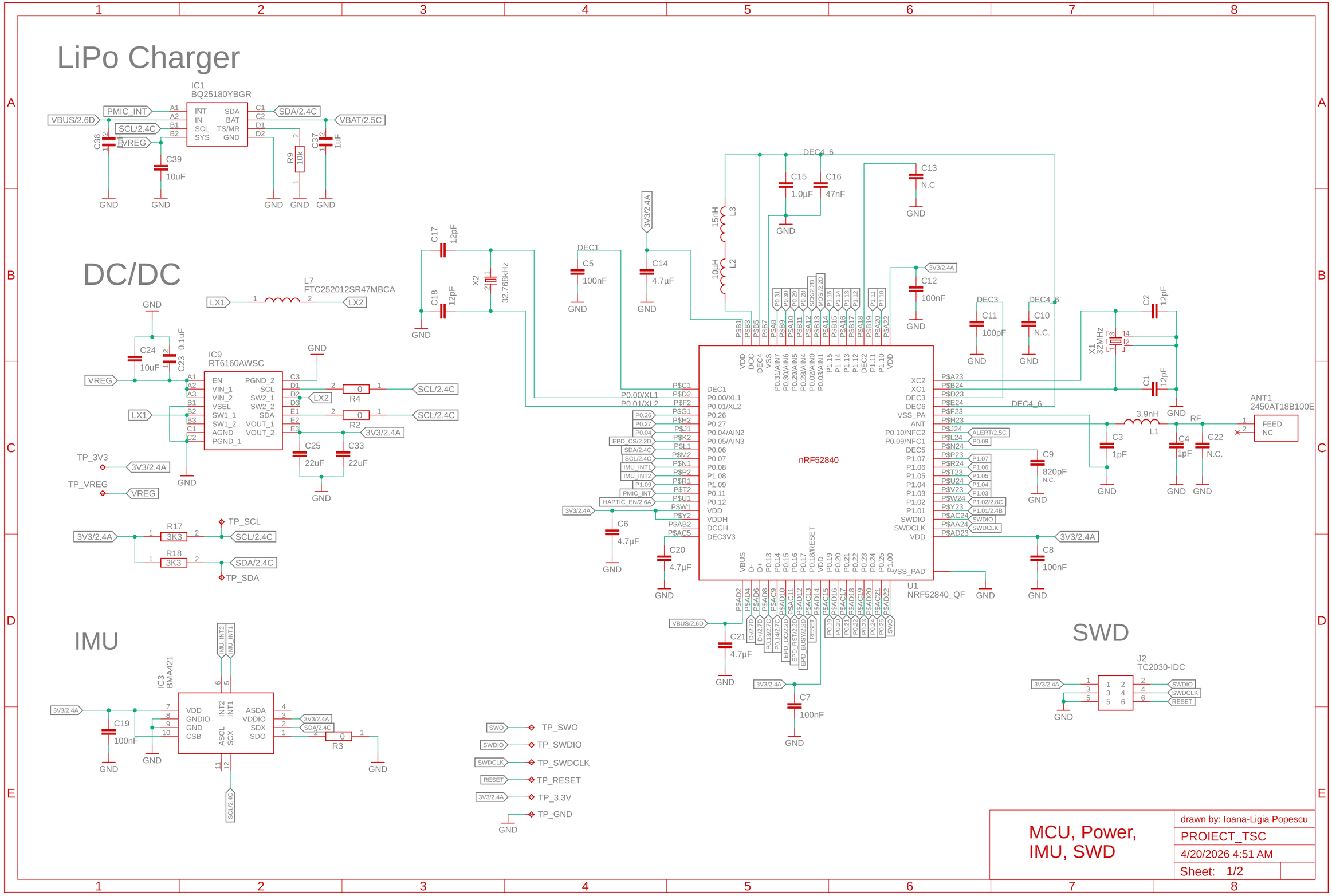

MCU, Power, IMU, SWD

drawn by: Ioana-Ligia Popescu

PROIECT_TSC

4/20/2026 4:51 AM

Sheet: 1/2

E-Paper Drive Circuit

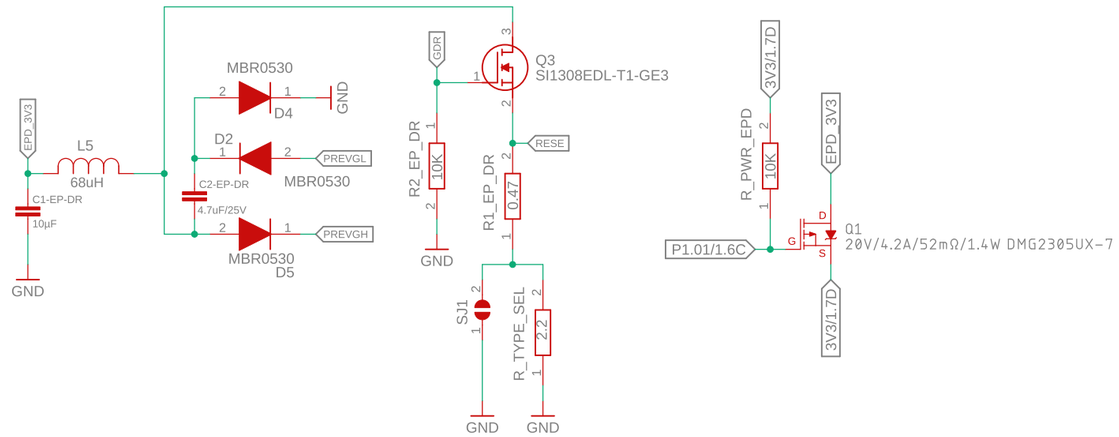

Haptic Driver

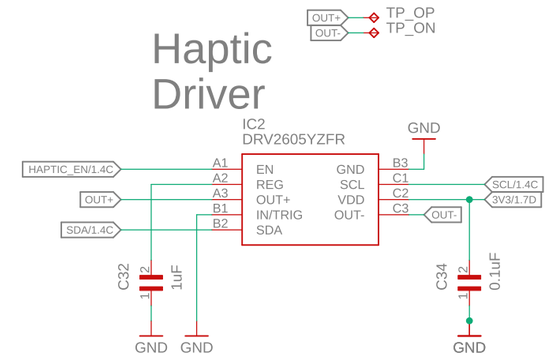

Buttons

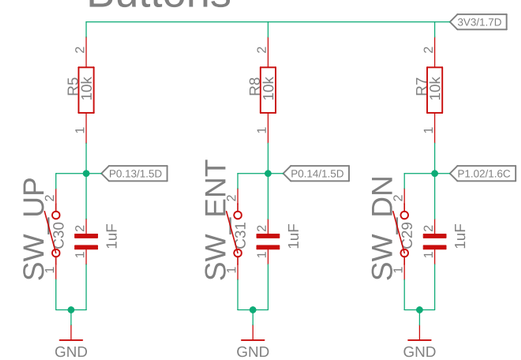

Fuel Gauge

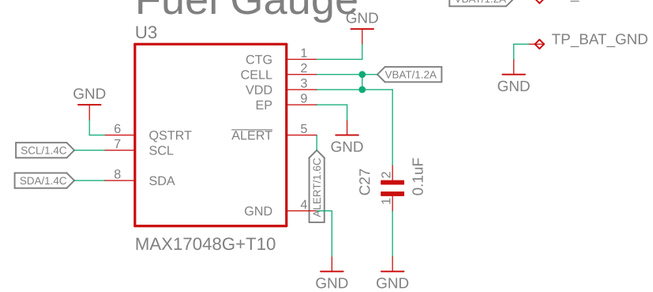

E-Paper Display Connector

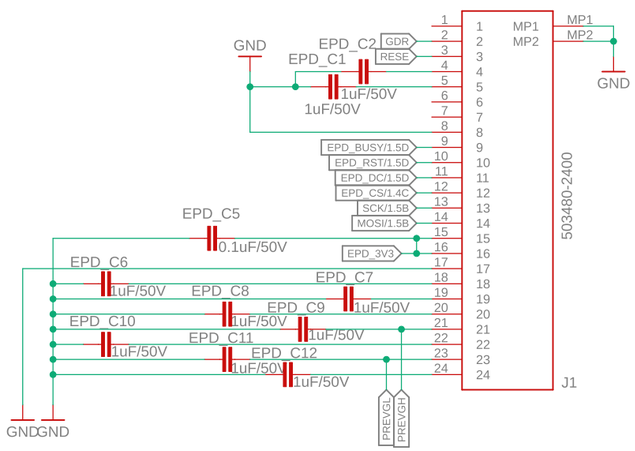

USB C Connector & ESD Protection

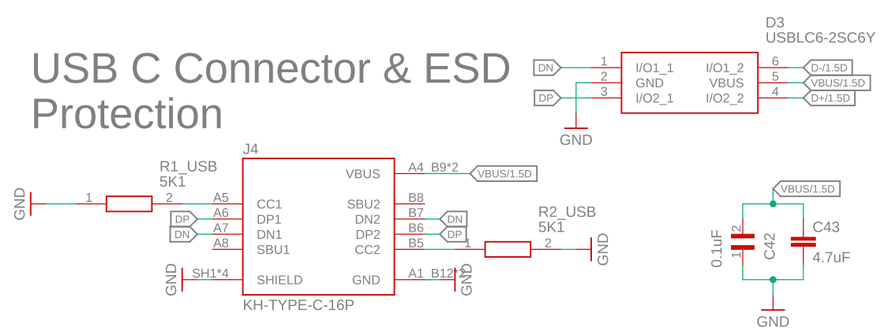

E-Paper &Peripherals	drawn by: Ioana-Ligia Popescu
	PROIECT_TSC
	4/20/2026 4:51 AM
	Sheet: 2/2