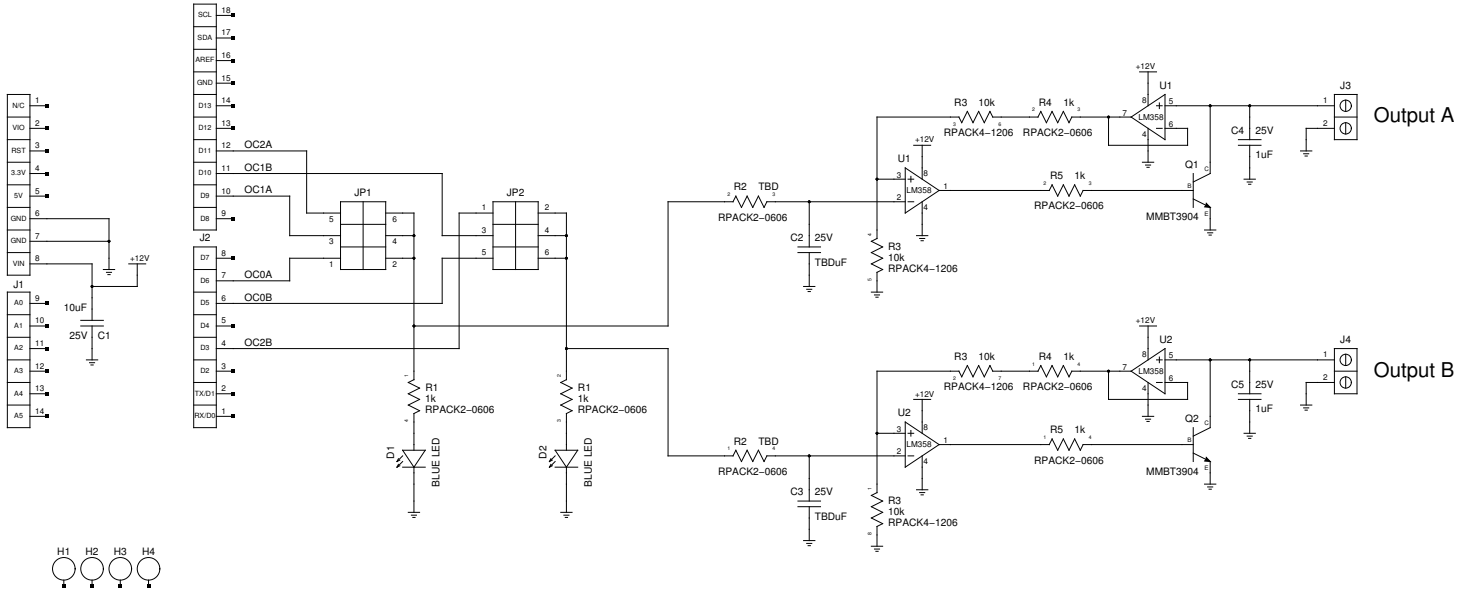

TITLE	Cloud Simulator Arduino Shield
FILE: ard-clouds.sch	REVISION: $Revision$
PAGE 1 OF 1	DRAWN BY: Michael Petersen