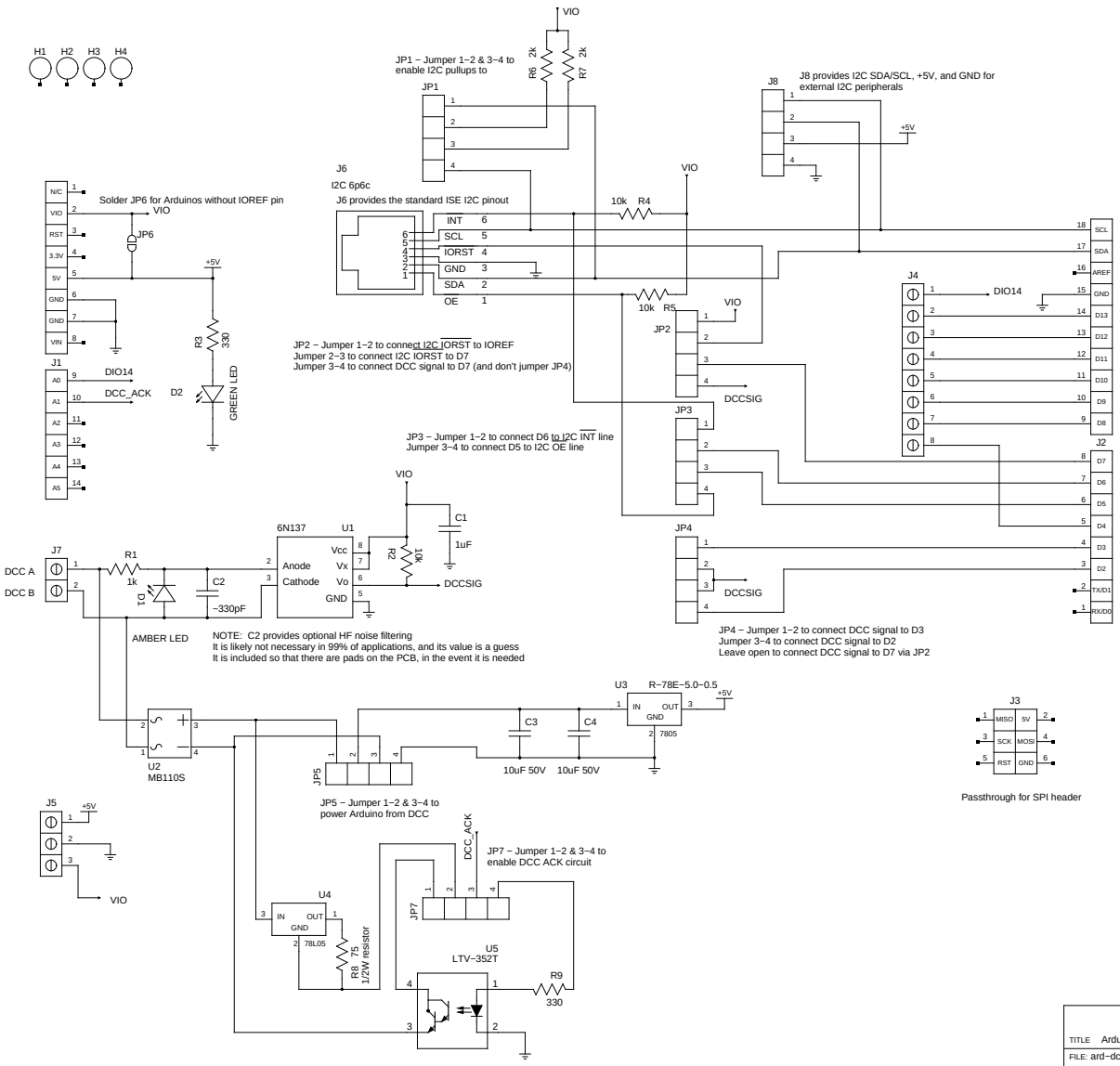

TITLE Arduino DCC Decoder Shield	
FILE: ard−dccshield.sch	REVISION: $Revision$
PAGE 1 OF 1	DRAWN BY: Nathan D. Holmes