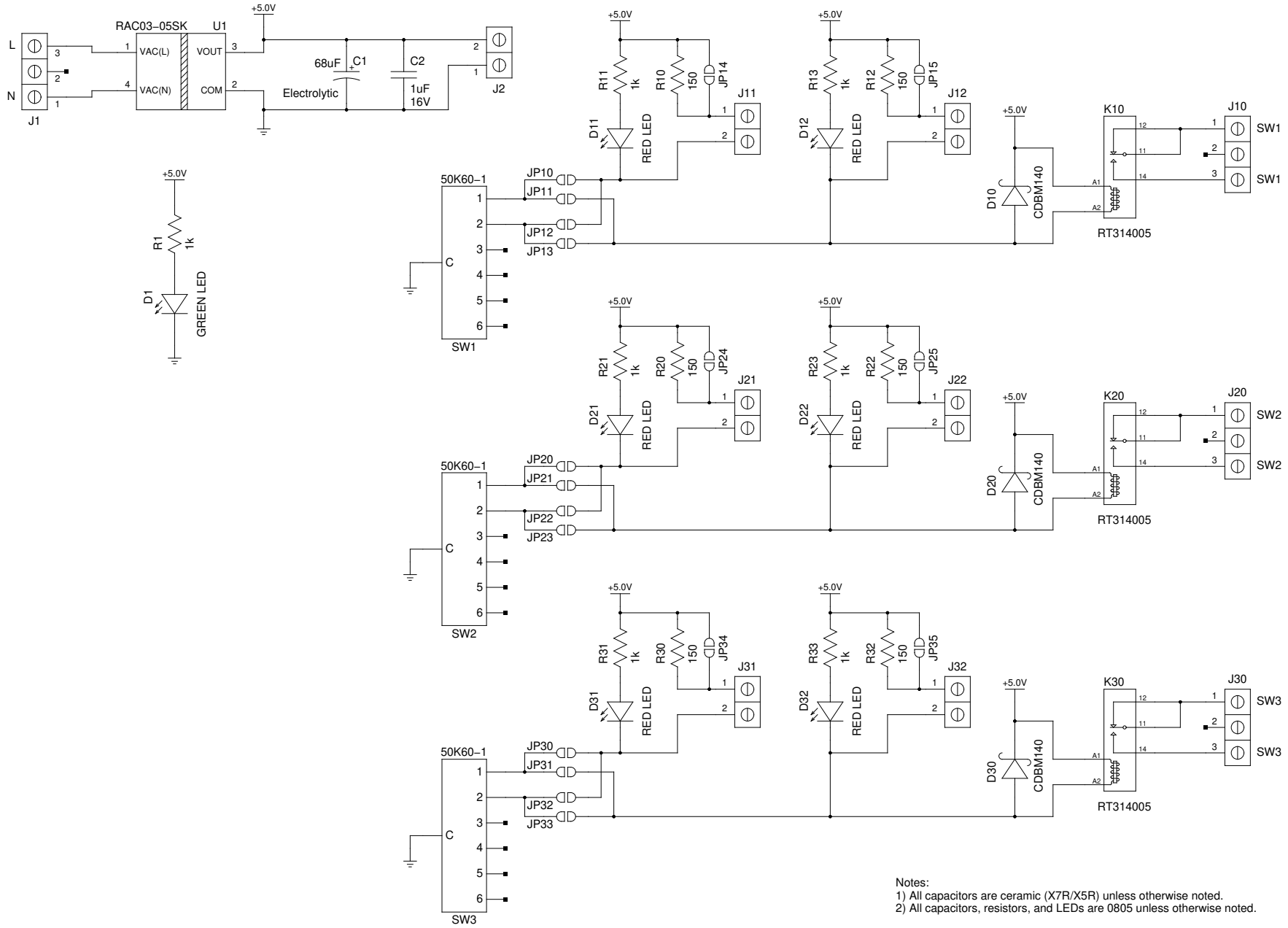

Notes:
1) All capacitors are ceramic (X7R/X5R) unless otherwise noted.
2) All capacitors, resistors, and LEDs are 0805 unless otherwise noted.

TITLE CTC Light Switches	
FILE: ckt–ctclsw.sch	REVISION:
PAGE 1 OF 1	DRAWN BY: Michael Petersen